SIEMENS

Data Sheet

VBII Heavy Duty Safety Switch

60A, 600V, Type 1

usa.siemens.com/switches



Standards and Ratings

- UL Listed under file #E4776
- Meets UL98 for switches and UL 50 for enclosures
- Meets NEMA Standard KS-1 for enclosed switches
- Meets NEC wire bending space requirements
- Rated 10,000 AIC as standard or 100,000 when protected by Class R, T or J fuses rated 60 amp maximum
- I^2t rated (Amps^2 x Seconds = 200,000)
- 12X overload current rating exceeds 10X industry standard
- Suitable for use as service entrance equipment
- Includes internal shields which meet NEC 2020 230.62 line side barrier requirements

Features

- Quick-make and break switching action
- Double break visible blade design
- Highly visible ON/OFF indication
- Rugged installer friendly enclosure design
- Modular design allows quick and easy replacement of parts
- Front removable lugs which can easily be converted to copper body or compression type lugs
- Defeatable dual cover interlock

Product Specifications

Heavy Duty 60A, 600V Type 1

General Information

Catalog Number	Volts	Description	Shipping Weight (lbs.)
HNF362H	600V AC, 250V DC	3 Pole, 3 Wire, Non-Fusible	12

Horsepower Ratings – 600 Volts

Catalog Number	3 Phase, 480V AC		3 Phase, 600V AC		600V DC
	Std	Max	Std	Max	
HNF362H	—	50 [1]	—	40	10

Mechanical Lug Wire Range (60/75°C, Cu/Al)

Description	Wire Range
Line	#12-3 AWG (Al) or #14-3 AWG (Cu)
Load, Neutral	#12-2 (Al) #14-2 (Cu)
Ground	#14-4 AWG

Accessories

Catalog Number	Description
HA161234	One Normally Open and Closed Auxiliary Switches
HA261234	Two Normally Open and Closed Auxiliary Switches
HA361234	Low Voltage Auxiliary Switch
HG61234	Equipment Ground Lug Kit
HG261234	Isolated Equipment Ground Kit
HN612	Neutral Kit
HLC612	Copper Lug Kit (9 lugs per kit)
HCL612	Compression Lug Neutral Barrier Kit

Replacement Parts

Catalog Number	Description
HNB612	Non-Fusible Replacement Base
HH6123	Replacement Handle/Handle Guard
HL612	Replacement Lugs (3 lugs per kit)
HM6123	Replacement Mechanism
[2]	Replacement Door

Compression Lugs [3]

Wire Size	Burndy		Thomas-Betts		Ilsco	
	CU Only	CU/AL	CU Only	CU/AL	CU Only	CU/AL
#14-10	—	—	—	60096 60097	—	—
#8	YA8C-L BOX YA8C-L1 BOX	—	54104 54130	60101 60102 61102	CRA-8	ACL-8 ACN-8
#6	—	—	—	61107	—	—

1 Also rated 20HP on 3 Phase, 240V AC systems.
2 Place "DOOR" at the end of the switch catalog number.
3 If compression lugs are used for the neutral, order compression lug neutral barrier kit HCL612.

Dimension Drawings

Heavy Duty 60A, 600V Type 1

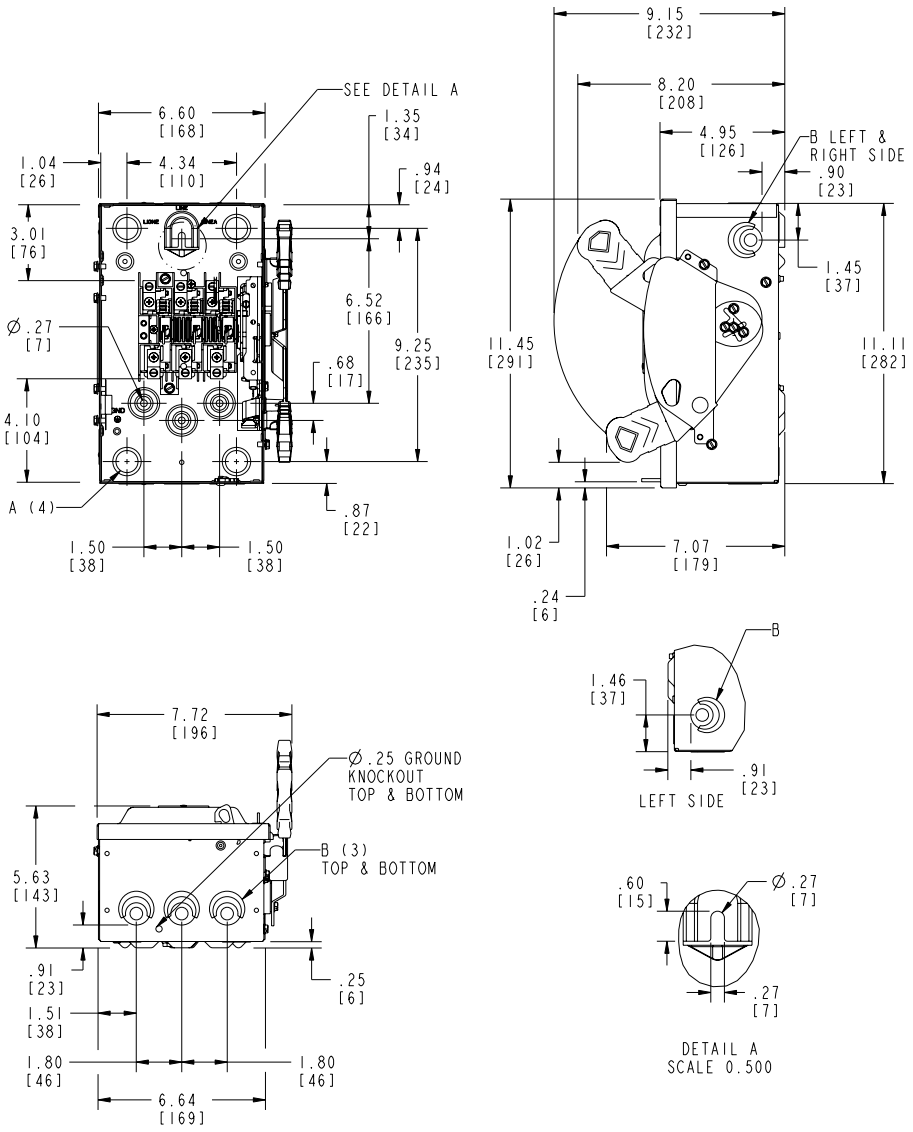

No knockouts in enclosures.
Dimensions shown in inches and millimeters ( ).
Dimension shown accurate to ± ⅛ inch.

KNOCKOUT CODE	CONDUIT SIZE
A (Concentric)	.75 1.00
B (Tangential)	.50 .75 1.00

	LINE SIDE WIRE BEND	LOAD SIDE WIRE BEND
Non-Fused	3.02 (77)	4.11 (104)

Enclosure:Cold Rolled Steel
0.54 Thick (17 Gauge)
Finish: ANSI #61 Grey Paint

Published by
Siemens Industry, Inc. 2021.

Siemens Industry, Inc.
3617 Parkway Ln
Peachtree Corners, GA 30092

For more information, please contact
our Customer Support Center.
Phone: 1-800-241-4453
E-mail: info.ipc.us@siemens.com
info.hmi.us@siemens.com

usa.siemens.com/switches

Order No.: SSDS-HN6N1-0921
Printed in U.S.A.
© 2021 Siemens Industry, Inc.

The technical data presented in this document is based on an actual case or on as-designed parameters, and therefore should not be relied upon for any specific application and does not constitute a performance guarantee for any projects. Actual results are dependent on variable conditions. Accordingly, Siemens does not make representations, warranties, or assurances as to the accuracy, currency or completeness of the content contained herein. If requested, we will provide specific technical data or specifications with respect to any customer's particular applications. Our company is constantly involved in engineering and development. For that reason, we reserve the right to modify, at any time, the technology and product specifications contained herein.