SIEMENS

SIMATIC

ET 200SP
Analog Input Module
AI 4xU/I 2-wire ST
(6ES7134-6HD01-0BA1)

Equipment Manual

Introduction 1

Industrial cybersecurity 2

Product overview 3

Wiring up 4

Parameters/address space 5

Interrupts/diagnostics alarms 6

Technical specifications 7

Parameter data record A

Representation of analog values B

09/2026
A5E03572832-AG

Legal information

Warning notice system

This manual contains notices you have to observe in order to ensure your personal safety, as well as to prevent damage to property. The notices referring to your personal safety are highlighted in the manual by a safety alert symbol, notices referring only to property damage have no safety alert symbol. These notices shown below are graded according to the degree of danger.

⚠ DANGER

indicates that death or severe personal injury **will** result if proper precautions are not taken.

⚠ WARNING

indicates that death or severe personal injury **may** result if proper precautions are not taken.

⚠ CAUTION

indicates that minor personal injury can result if proper precautions are not taken.

NOTICE

indicates that property damage can result if proper precautions are not taken.

If more than one degree of danger is present, the warning notice representing the highest degree of danger will be used. A notice warning of injury to persons with a safety alert symbol may also include a warning relating to property damage.

Qualified Personnel

The product/system described in this documentation may be operated only by **personnel qualified** for the specific task in accordance with the relevant documentation, in particular its warning notices and safety instructions. Qualified persons are those who, because of their training and experience, are familiar with the installation, assembly, commissioning, operation, decommissioning and disassembly of the product and can recognize risks and avoid possible hazards.

Proper use of Siemens products

Note the following:

⚠ WARNING

Siemens products may only be used for the application described in the catalog and the associated usage information. If products and components from other manufacturers are used, these must be recommended or approved by Siemens. Proper transport, storage, installation, assembly, commissioning, operation and maintenance are required to ensure that the products operate safely and without any problems. The permissible ambient conditions must be complied with. The information in the relevant documentation must be observed.

Trademarks

All names identified by ® are registered trademarks of Siemens Aktiengesellschaft. The remaining trademarks in this publication may be trademarks whose use by third parties for their own purposes could violate the rights of the owner.

Disclaimer of Liability

We have reviewed the contents of this publication to ensure consistency with the hardware and software described. Since variance cannot be precluded entirely, we cannot guarantee full consistency. However, the information in this publication is reviewed regularly and any necessary corrections are included in subsequent editions.

Published by
Siemens Aktiengesellschaft
Digital Industries
P.O. Box 32 20
91058 Erlangen, GERMANY

For the U.S. published by
Siemens Industry Inc.
100 Technology Drive
Alpharetta, GA 30005
UNITED STATES

A5E03572832-AG
09/2026 Subject to change

© Siemens 2012 - 2026
All rights reserved

Table of contents

1 Introduction 5

1.1 ET 200SP Documentation Guide 6
1.1.1 SIMATIC Technical Documentation 7
1.1.2 Tool support 10

2 Industrial cybersecurity 13

2.1 Introduction to industrial cybersecurity 13
2.2 Cybersecurity information 13
2.3 Cybersecurity-relevant information 14

3 Product overview 15

3.1 Properties 15

4 Wiring up 18

4.1 Connection diagram 18
4.2 System structure with BaseCarrier 19
4.3 Schematic circuit diagram 20

5 Parameters/address space 21

5.1 Measuring types and ranges 21
5.2 Parameters 21
5.3 Explanation of the parameters 23
5.4 Address space 25

6 Interrupts/diagnostics alarms 27

6.1 Status and error displays 27
6.2 Interrupts 28
6.2.1 Triggering of a diagnostics interrupt 29
6.2.2 Triggering of a maintenance event 29
6.3 Alarms 29
6.3.1 Diagnostics alarms 29
6.3.2 Maintenance alarms 31

7 Technical specifications 32

7.1 Technical specifications 32

A Parameter data record 37
A.1 Dependencies when configuring with GSD file 37
A.2 Parameter assignment and structure of the parameter data record 38
A.3 Code for the measurement type 39
A.4 Code for the measuring range 40
A.5 Codes for interference frequency suppression 40
A.6 Codes for smoothing 40
A.7 Error codes 41

B Representation of analog values 42
B.1 Representation of input ranges 42
B.2 Representation of analog values in voltage measuring ranges 43
B.3 Representation of analog values in the current measuring ranges 44
B.4 Measured values for wire break 45

Introduction

1

Purpose of the documentation

This manual supplements the system manual ET 200SP distributed I/O system (https://support.automation.siemens.com/WW/view/en/58649293).

Functions that generally relate to the system are described in this manual.

The information provided in this manual and in the system/function manuals supports you in commissioning the system.

Changes compared to previous version

Compared to the previous version, this manual contains the following change:

- Wiring and schematic circuit diagrams have been revised.
- Technical specifications have been updated.
- Security features have been added.

Conventions

CPU: When the term "CPU" is used in the following, it applies to the CPUs of the S7-1500 automation system as well as to the CPUs/interface modules of the ET 200SP distributed I/O system.

STEP 7: In this documentation, "STEP 7" is used as a synonym for all versions of the configuration and programming software "STEP 7 (TIA Portal)".

Please also observe notes marked as follows:

NOTE

A note contains important information on the product described in the documentation, on the handling of the product or on the section of the documentation to which particular attention should be paid.

Recycling and disposal

For environmentally friendly recycling and disposal of your old equipment, contact a certified electronic waste disposal company and dispose of the equipment according to the applicable regulations in your country.

1.1 ET 200SP Documentation Guide



The documentation for the SIMATIC ET 200SP distributed I/O system is arranged into three areas.

This arrangement enables you to access the specific content you require.

You can download the documentation free of charge from the Internet (https://support.industry.siemens.com/cs/ww/en/view/109742709).

Basic information



The System Manual describes in detail the configuration, installation, wiring and commissioning of the SIMATIC ET 200SP distributed I/O system.

The STEP 7 online help supports you in the configuration and programming.

Examples:

- ET 200SP System Manual
- System Manual ET 200SP HA/ET 200SP modules for devices used in a hazardous area
- Online help TIA Portal

Device information



Equipment manuals contain a compact description of the module-specific information, such as properties, wiring diagrams, characteristics and technical specifications.

Examples:

- Equipment Manuals CPUs
- Equipment Manuals Interface Modules
- Equipment Manuals Digital Modules
- Equipment Manuals Analog Modules
- Equipment Manuals Motor Starter
- BaseUnits Equipment Manuals
- Equipment Manual Server Module
- Equipment Manuals Communications Modules
- Equipment Manuals Technology Modules

General information



The function manuals contain detailed descriptions on general topics relating to the SIMATIC ET 200SP distributed I/O system.

Examples:

- Function Manual ET 200AL/ET 200SP Mixed Configuration
- Function Manual Diagnostics
- Function Manual Communication
- PROFINET Function Manual
- PROFIBUS Function Manual
- Function Manual Designing Interference-free Controllers
- MultiFieldbus Function Manual

Product Information

Changes and supplements to the manuals are documented in a Product Information. The Product Information takes precedence over the device and system manuals.

You can find the latest Product Information on the ET 200SP distributed I/O system on the Internet. (https://support.industry.siemens.com/cs/de/en/view/73021864)

Manual Collection ET 200SP

The Manual Collection contains the complete documentation on the SIMATIC ET 200SP distributed I/O system gathered together in one file.

You can find the Manual Collection on the Internet.
(https://support.industry.siemens.com/cs/ww/en/view/84133942)

Manual Collection fail-safe modules

The Manual Collection contains the complete documentation on the fail-safe SIMATIC modules, gathered together in one file.

You can find the Manual Collection on the Internet.
(https://support.industry.siemens.com/cs/ww/en/view/109806400)

1.1.1 SIMATIC Technical Documentation

Additional SIMATIC documents will complete your information. You can find these documents and their use at the following links and QR codes.

The Industry Online Support gives you the option to get information on all topics. Application examples support you in solving your automation tasks.

Overview of the SIMATIC Technical Documentation

Here you will find an overview of the SIMATIC documentation available in Siemens Industry Online Support:



Industry Online Support International (https://support.industry.siemens.com/cs/ww/en/view/109742705)

Watch this short video to find out where you can find the overview directly in Siemens Industry Online Support and how to use Siemens Industry Online Support on your mobile device:



Quick introduction to the technical documentation of automation products per video (https://support.industry.siemens.com/cs/us/en/view/109780491)



YouTube video: Siemens Automation Products - Technical Documentation at a Glance (https://youtu.be/TwLSxxRQQsA)

Retention of the documentation

Retain the documentation for later use.

For documentation provided in digital form:

1. Download the associated documentation after receiving your product and before initial installation/commissioning. Use the following download options:
   - Industry Online Support International: (https://support.industry.siemens.com)
     The article number is used to assign the documentation to the product. The article number is specified on the product and on the packaging label. Products with new, non-compatible functions are provided with a new article number and documentation.
   - ID link:
     Your product may have an ID link. The ID link is a QR code with a frame and a black frame corner at the bottom right. The ID link takes you to the digital nameplate of your product. Scan the QR code on the product or on the packaging label with a smartphone camera, barcode scanner, or reader app. Call up the ID link.
2. Retain this version of the documentation.

Updating the documentation

The documentation of the product is updated in digital form. In particular in the case of function extensions, the new performance features are provided in an updated version.

1. Download the current version as described above via the Industry Online Support or the ID link.
2. Also retain this version of the documentation.

mySupport

With "mySupport" you can get the most out of your Industry Online Support.

Registration	You must register once to use the full functionality of "mySupport". After registration, you can create filters, favorites and tabs in your personal workspace.
Support requests	Your data is already filled out in support requests, and you can get an overview of your current requests at any time.
Documentation	In the Documentation area you can build your personal library.
Favorites	You can use the "Add to mySupport favorites" to flag especially interesting or frequently needed content. Under "Favorites", you will find a list of your flagged entries.
Recently viewed articles	The most recently viewed pages in mySupport are available under "Recently viewed articles".
CAx data	The CAx data area gives you access to the latest product data for your CAx or CAe system. You configure your own download package with a few clicks: • Product images, 2D dimension drawings, 3D models, internal circuit diagrams, EPLAN macro files • Manuals, characteristics, operating manuals, certificates • Product master data

You can find "mySupport" on the Internet. (https://support.industry.siemens.com/My/ww/en)

Application examples

The application examples support you with various tools and examples for solving your automation tasks. Solutions are shown in interplay with multiple components in the system - separated from the focus on individual products.

You can find the application examples on the Internet.
(https://support.industry.siemens.com/cs/ww/en/ps/ae)

AI-powered online support chat

The "Automation Knowledge Guide" function is an advanced AI-controlled platform that gives you access to the powerful knowledge base of the Siemens Support Portal (https://sieportal.siemens.com/en-ww/support). You do not just receive mechanical answers to your questions, but precise, interactive informational material. This allows you to effectively speed up your research and decision processes.

The following link (https://support.industry.siemens.com/cs/ww/en/view/109974274) provides current information on the availability of "Automation Knowledge Guide":

You can also access the entry by means of the "AI powered Online Support Chat" command in the "Help" menu in TIA Portal.

1.1.2 Tool support

Tools

The tools described below support you in all steps: from planning, over commissioning, all the way to analysis of your system.

TIA Selection Tool

The TIA Selection Tool tool supports you in the selection, configuration, and ordering of devices for Totally Integrated Automation (TIA).

As successor of the SIMATIC Selection Tools , the TIA Selection Tool assembles the already known configurators for automation technology into a single tool.

With the TIA Selection Tool , you can generate a complete order list from your product selection or product configuration.

You can find the TIA Selection Tool on the Internet.
(https://support.industry.siemens.com/cs/ww/en/view/109767888)

SIMATIC Automation Tool

You can use the SIMATIC Automation Tool to perform commissioning and maintenance activities on various SIMATIC S7 stations as bulk operations independent of TIA Portal.

The SIMATIC Automation Tool offers a wide range of functions:

- Scanning of a PROFINET/Ethernet system network and identification of all connected CPUs
- Assignment of addresses (IP, subnet, Gateway) and device name (PROFINET device) to a CPU
- Transfer of the date and the programming device/PC time converted to UTC time to the module
- Program download to CPU
- RUN/STOP mode switchover
- CPU localization through LED flashing
- Reading out of CPU error information
- Reading the CPU diagnostic buffer
- Reset to factory settings
- Firmware update of the CPU and connected modules

You can find the SIMATIC Automation Tool on the Internet.
(https://support.industry.siemens.com/cs/ww/en/view/98161300)

PRONETA

SIEMENS PRONETA (PROFINET network analysis) is a commissioning and diagnostic tool for PROFINET networks. PRONETA Basic has two core functions:

- In the network analysis, you get an overview of the PROFINET topology. Compare a real configuration with a reference installation or make simple parameter changes, e.g. to the names and IP addresses of the devices.
- The "IO test" is a simple and rapid test of the wiring and the module configuration of a plant, including documentation of the test results.

You can find SIEMENS PRONETA Basic on the Internet:
(https://support.industry.siemens.com/cs/ww/en/view/67460624)

SIEMENS PRONETA Professional is a licensed product that offers you additional functions. It offers you simple asset management in PROFINET networks and supports operators of automation systems in automatic data collection/acquisition of the components used through various functions:

- The user interface (API) offers an access point to the automation cell to automate the scan functions using MQTT or a command line.
- With PROFIenergy diagnostics, you can quickly detect the current pause mode or the readiness for operation of devices that support PROFIenergy and change these as needed.
- The data record wizard supports PROFINET developers in reading and writing acyclic PROFINET data records quickly and easily without PLC and engineering.

You can find SIEMENS PRONETA Professional on the Internet.
(https://www.siemens.com/proneta-professional)

SINETPLAN

SINETPLAN, the Siemens Network Planner, supports you in planning automation systems and networks based on PROFINET. The tool facilitates professional and predictive dimensioning of your PROFINET installation as early as in the planning stage. In addition, SINETPLAN supports you during network optimization and helps you to exploit network resources optimally and to plan reserves. This helps to prevent problems in commissioning or failures during productive operation even in advance of a planned operation. This increases the availability of the production plant and helps improve operational safety.

The advantages at a glance

- Network optimization thanks to port-specific calculation of the network load
- Increased production availability thanks to online scan and verification of existing systems
- Transparency before commissioning through importing and simulation of existing STEP 7 projects
- Efficiency through securing existing investments in the long term and the optimal use of resources

You can find SINETPLAN on the Internet
(https://new.siemens.com/global/en/products/automation/industrial-communication/profinet/sinetplan.html).

MultiFieldbus Configuration Tool

MultiFieldbus Configuration Tool (MFCT) is PC-based software and supports the configuration of MultiFieldbus-Devices and DALI-modules. In addition, the MFCT offers convenient options

for bulk firmware updating of ET 200 devices with MultiFieldbus-support and reading of service data for many other Siemens devices.

Functional scope of the MFCT

- MultiFieldbus configuration:
  Engineering, configuration and diagnostics of MultiFieldbus-devices, provision of the required project files (project, UDT-, CSV- and EDS-file), transfer/export of the files to device and/or data memory.
- DALI configuration:
  Device selection and online configuration of DALI modules.
- TM FAST:
  Generation and download of FPGA-UPD- and FPGA-DB-files.
- Maintenance:
  Topology scan of a Ethernet network, reading of service data, parameter assignment and firmware update.
- Settings:
  Language switching German / English, network scanner speed, setting of the network adapter, installation of GSDML-and EDS-files.
- Event diagnostics for CM PTP:
  Reading out and analyzing the parameter settings and communication of a CM PTP.

System/installation requirements for MFCT

The MFCT runs under Microsoft Windows and does not require installation or administrator rights.

For MFCT you must also install the following software:

- Microsoft .NET Framework 4.8 (You can find an Offline Installer on the Internet. (https://support.microsoft.com/en-us/topic/microsoft-net-framework-4-8-offline-installer-for-windows-9d23f658-3b97-68ab-d013-aa3c3e7495e0))
- NPcap from directory "Misc"
- PG/PC interface from directory "Misc"
- Microsoft C++ Redistributable for x86-systems (you can find the installation data for download on the Internet.
  (https://support.industry.siemens.com/cs/ww/en/view/109773881))

The download of the tool and more information as well as documentation on the individual functions of the MFCT can be found on the Internet.
(https://aka.ms/vs/15/release/vc_redist.x86.exe)

Industrial cybersecurity 2

2.1 Introduction to industrial cybersecurity

Digitalization and the increasing networking of machines and industrial plants are also increasing the risk of cyberattacks. Appropriate protective measures are therefore mandatory, particularly in the case of critical infrastructure facilities.

Refer to the general information and measures on the subject of industrial cybersecurity in the ET 200SP Distributed I/O System (https://support.automation.siemens.com/WW/view/en/58649293) System Manual.

This section provides an overview of security-relevant information pertaining to your SIEMENS device.

2.2 Cybersecurity information

Siemens provides products and solutions with industrial cybersecurity functions that support the secure operation of plants, systems, machines and networks.

In order to protect plants, systems, machines and networks against cyber threats, it is necessary to implement – and continuously maintain – a holistic, state-of-the-art industrial cybersecurity concept. Siemens' products and solutions constitute one element of such a concept.

Customers are responsible for preventing unauthorized access to their plants, systems, machines and networks. Such systems, machines and components should only be connected to an enterprise network or the internet if and to the extent such a connection is necessary and only when appropriate security measures (e.g. firewalls and/or network segmentation) are in place.

For additional information on industrial cybersecurity measures that may be implemented, please visit
https://www.siemens.com/cybersecurity-industry.

Siemens' products and solutions undergo continuous development to make them more secure. Siemens strongly recommends that product updates are applied as soon as they are available and that the latest product versions are used. Use of product versions that are no longer supported, and failure to apply the latest updates may increase customer's exposure to cyber threats.

To stay informed about product updates, subscribe to the Siemens Industrial Cybersecurity RSS Feed under
https://www.siemens.com/cert.

2.3 Cybersecurity-relevant information

Observe all relevant cybersecurity information.

You can find the supported security functions of the module in the technical specifications (Page 32) under "Security". The functions are described in detail in the section on industrial cybersecurity in the system manual (https://support.automation.siemens.com/WW/view/en/58649293).

Product overview

3

3.1 Properties

Article number

6ES7134-6HD01-0BA1 (number in pack: 1 unit)
6ES7134-6HD01-2BA1 (number in pack: 10 units)

View of the module

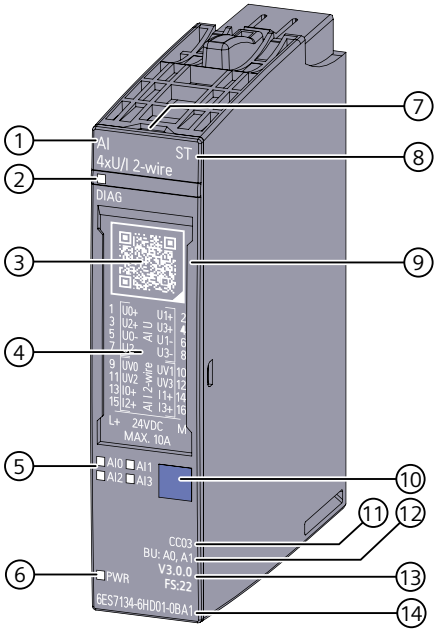

① Module type and designation
② LED for diagnostics
③ QR code for identification link
④ Wiring diagram
⑤ LEDs for channel status
⑥ LED for supply voltage
⑦ Slot for optional reference identification label
⑧ Function class
⑨ Insertion option for optional labeling strips
⑩ Color coding module type
⑪ Color code for selecting the color identification labels
⑫ BU type
⑬ Firmware version and functional status
⑭ Article number

Figure 3-1 View of the module AI 4×U/I 2-wire ST

Properties

The module has the following technical properties:

- Analog input module with 4 inputs
- Measuring type voltage and current for 2-wire transducer (can be set for each channel)
- Input ranges for voltage measurement:
  - ±10 V, resolution 16 bits including sign
  - ±5 V, resolution 16 bits including sign
  - 1 to 5 V, resolution 15 bits
  - 0 to 10 V, resolution 15 bits
- Input ranges for current measurement:
  - 4 to 20 mA, resolution 15 bits
  - 0 to 20 mA, resolution 15 bits
- Electrically isolated from the supply voltage L+ (only for voltage measuring type)
- Permitted common mode voltage: 10 V_{ss}
- Configurable diagnostics (per module)

The module supports the following functions:

Table 3-1 Version dependencies of the functions

Function	HW version	FW version	STEP 7		GSD file	
			TIA Portal	V5.x	PROFINET IO	PROFIBUS DP
Firmware update	FS01	V2.0.0 or higher	V14 or higher with HSP 0239	V5.5 SP3 or higher with HSP 0227 V7.0 or higher	X	X
Identification data I&M0 to I&M3	FS01	V2.0.0 or higher	V14 or higher with HSP 0239	V5.5 SP3 or higher with HSP 0227 V7.0 or higher	X	X
Reconfiguration in RUN	FS01	V2.0.0 or higher	V14 or higher with HSP 0239	V5.5 SP3 or higher with HSP 0227 V7.0 or higher	X	X
PROFIenergy	FS01	V2.0.0 or higher	V14 or higher with HSP 0239	V5.5 SP3 or higher with HSP 0227 V7.0 or higher	X	-
Value status	FS01	V2.0.0 or higher	V14 or higher with HSP 0239	V5.5 SP3 or higher with HSP 0227 V7.0 or higher	X	X

Accessories

The following accessories must be ordered separately:

- Labeling strips
- Color identification labels
- Reference identification label
- Shield connector

See also

You will find additional information on the accessories in the ET 200SP distributed I/O system (https://support.industry.siemens.com/cs/ww/en/view/58649293) system manual.

Wiring up

4

4.1 Connection diagram

This section contains the pin assignments of the module and the various connection types.

You can find information on wiring the BaseUnit in the ET 200SP distributed I/O system (https://support.automation.siemens.com/WW/view/en/58649293) System Manual.

NOTE

You can use and combine the different wiring options for all channels.

NOTE

The load group of the module must begin with a light-colored BaseUnit. Keep this in mind also during the configuration.

Pin assignment

The following table shows an example of the pin assignment of the analog input module on the BaseUnit BU type A0/A1:

Description	Signal	Terminal	BaseUnit BU type A0/A1	Terminal	Signal	Description
Analog input voltage positive, channel 0	U_0+	1	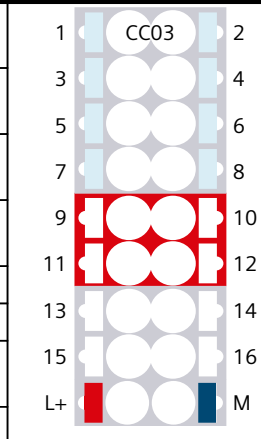	2	U_1+	Analog input voltage positive, channel 1
Analog input voltage positive, channel 2	U_2+	3		4	U_3+	Analog input voltage positive, channel 3
Analog input voltage negative, channel 0	U_0-	5		6	U_1-	Analog input voltage negative, channel 1
Analog input voltage negative, channel 2	U_2-	7		8	U_3-	Analog input voltage negative, channel 3
Encoder supply, channel 0	U_{V0}	9		10	U_{V1}	Encoder supply, channel 1
Encoder supply, channel 2	U_{V2}	11		12	U_{V3}	Encoder supply, channel 3
Analog input current positive, channel 0	I_0+	13		14	I_1+	Analog input current positive, channel 1
Analog input current positive, channel 2	I_2+	15		16	I_3+	Analog input current positive, channel 3
24 V DC supply voltage[1)]	L+	L+		M	M	Ground

1) Infeed only with light-colored BaseUnit

Connection types

2-wire connection for voltage measurement	2-wire connection for current measurement
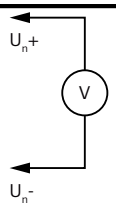	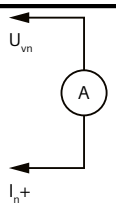

4.2 System structure with BaseCarrier

The figure below shows the pinning of the PCB connector of the BaseCarrier in top view.

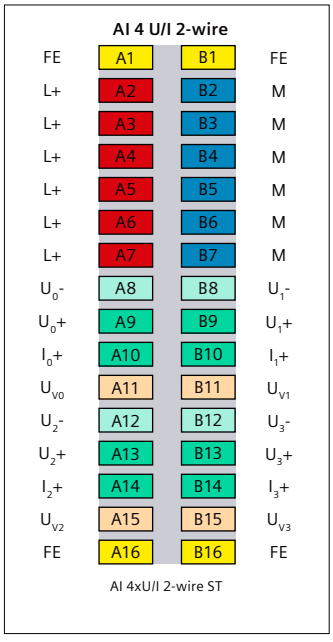

Figure 4-1 Pinning AI 4xU/I 2-wire ST

You can find more information in the ET 200SP System Structure with BaseCarrier (https://support.industry.siemens.com/cs/ww/en/view/109988377) function manual

4.3 Schematic circuit diagram

This section contains the schematic circuit diagram of the analog input module.

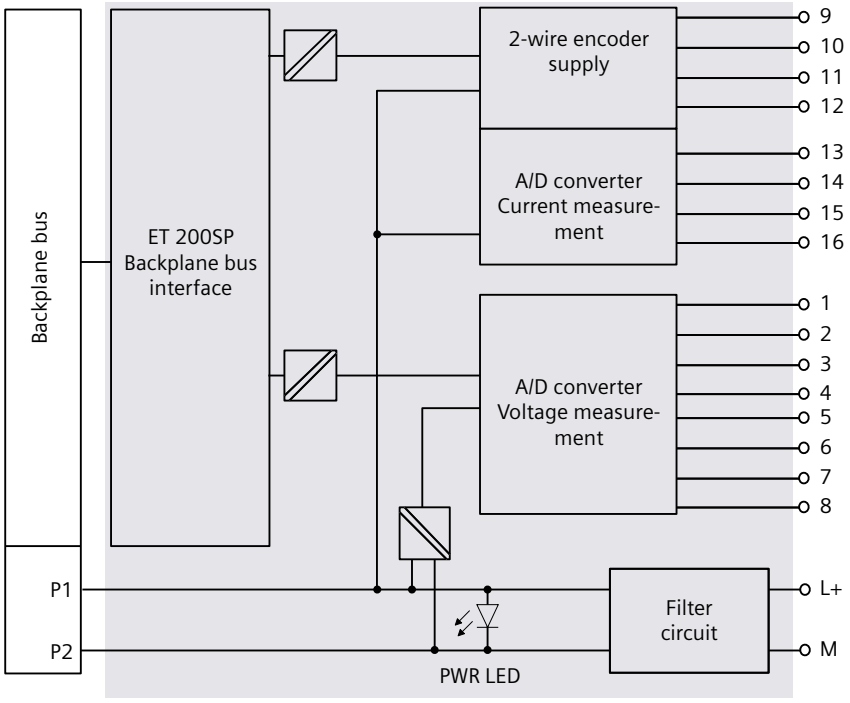

Figure 4-2 Schematic circuit diagram AI 4xU/I 2-wire ST

Parameters/address space

5

5.1 Measuring types and ranges

The following table shows the measurement types and the respective measuring ranges.

Table 5-1 Measuring ranges

Measuring type	Measuring range	Resolution
Voltage	± 5 V ±10 V 1 to 5 V 0 to 10 V	16 bits including sign 16 bits including sign 15 bits 15 bits
Current (2-wire transducer)	0 mA to 20 mA 4 to 20 mA	15 bits 15 bits

You will find the tables of the measuring ranges as well as overflow, overrange, etc., in the section Representation of analog values (Page 42).

5.2 Parameters

Parameters of the AI 4xU/I 2-wire ST

Specify the module properties with the various parameters in the course of your STEP 7 configuration. The following table lists the configurable parameters. The effective range of the configurable parameters depends on the type of configuration.

The following configurations are possible:

- Central operation with an ET 200SP CPU or on an ET 200SP Open Controller
- Distributed operation on PROFINET IO in an ET 200SP system
- Distributed operation on PROFIBUS DP in an ET 200SP system

In addition to parameter assignment via the configuration software, you can also configure parameters in RUN mode (dynamic) via the user program.

When assigning parameters in the user program, use the "WRREC" instruction to transfer the parameters to the module using the data records; refer to the section Parameter assignment and structure of the parameter data record (Page 38).

The following parameter settings are possible:

Table 5-2 Configurable parameters and their defaults (GSD file)

Parameter	Value range	Default	Configuration in RUN	Scope with configuration software e.g. STEP 7 (TIA Portal)	
				GSD file PROFINET IO	GSD file PROFIBUS DP
Diagnostics No supply voltage L+	• Disable • Enable	Disable	Yes	Module	Module
Diagnostics Short-circuit to ground	• Disable • Enable	Disable	Yes	Module	Module
Diagnostics Overflow	• Disable • Enable	Disable	Yes	Module	Module
Diagnostics Underflow	• Disable • Enable	Disable	Yes	Module	
Diagnostics Wire break	• Disable • Enable	Disable	Yes	Module	Module
Measuring type/range	• deactivated • Voltage +/- 5 V • Voltage +/- 10 V • Voltage 1..5 V • Voltage 0..10 V • Current (2-wire transducer) 0..20 mA • Current (2-wire transducer) 4..20 mA	Current (2-wire transducer) 4..20 mA	Yes	Channel	Channel
Smoothing	• None • Weak • Medium • Strong	None	Yes	Channel	Channel
Interference frequency suppression [2]	• 60 Hz (50 ms) • 50 Hz[1] (60 ms) • 16.6 Hz (180 ms)	50 Hz (60 ms)	Yes	Channel	Module [3]
Potential group	• Use the potential group of the left module (module plugged into a dark-colored BaseUnit) • Enable new potential group (module plugged into a light-colored BaseUnit)	Use potential group of the left module	No	Module	Module

1) Interference frequency suppression: Noise at 400 Hz is automatically included in the filtering at 50 Hz.

2) The settings in the "Interference frequency suppression" parameter have a direct effect on the conversion time of the channel. The analog value is therefore also affected by additionally set filtering via the "Smoothing" parameter.

3) Due to the limited number of parameters of a maximum of 244 bytes per ET 200SP station with a PROFIBUS GSD configuration, the configuration options are restricted. The parameter length of the I/O module is 5 bytes with PROFIBUS GSD configuration. If necessary, you can set this parameter by using a data record; see the appendix "Parameter data record".

NOTE

Unused channels

Disable unused channels in the parameter assignment to improve the cycle time of the module.

A disabled channel always returns the value $7FFF_H$.

5.3 Explanation of the parameters

Diagnostics No supply voltage L+

Enabling of the diagnostics for no or insufficient supply voltage L+.

Diagnostics Short-circuit to ground

Enabling of the diagnostics in the event of a short-circuit current of the encoder supply to ground or of an input to the encoder supply. Short-circuit is also detected in the range 1 to 5 V, when both input signals are short-circuited.

The short-circuit and underflow diagnostics can be activated simultaneously. If both diagnostics events occur simultaneously, however, the short-circuit diagnostics suppresses the underflow diagnostics. Short-circuit is output as the diagnostics event.

Diagnostics overflow

Enabling of the diagnostics when the measured value exceeds the overrange.

Diagnostics underflow

Enabling of the diagnostics when the measured value falls below the underrange.

Diagnostics Wire break

Enabling of the diagnostics if the module has no current flow or the current is too weak to be measured at the relevant input.

The wire break and underflow diagnostics can be activated simultaneously. If both diagnostics events occur simultaneously, the wire break diagnostics info is output.

Type/range of measurement

Refer to the section Measuring types and ranges (Page 21).

Smoothing

The individual measured values are smoothed by filtering. The smoothing can be set in 4 levels.

Smoothing time = number of module cycles (k) x cycle time of the module.

The following figure shows how many module cycles it takes for the smoothed analog value to approach 100%, depending on the configured smoothing. This applies to every signal change at the analog input.

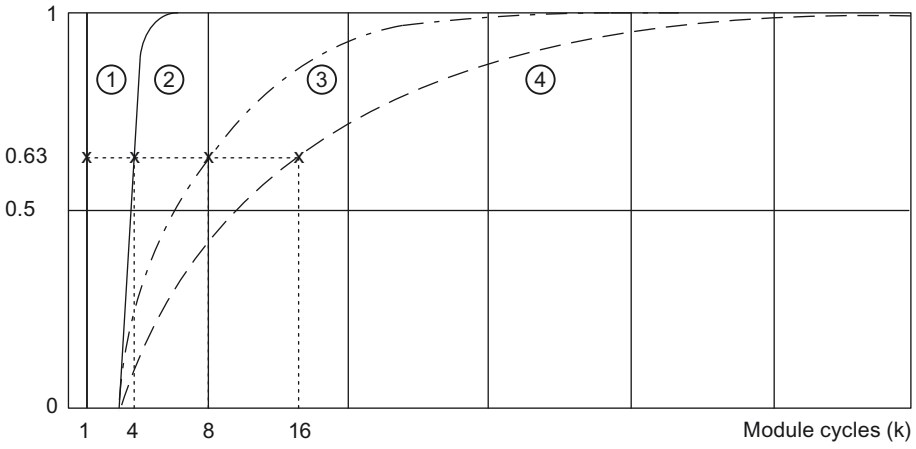

① No smoothing (k = 1)
② Weak (k = 4)
③ Medium (k = 8)
④ Strong (k = 16)

Figure 5-1 Smoothing with AI 4xU/I 2-wire ST

Interference frequency suppression

Suppresses the interference affecting analog input modules that is caused by the frequency of the AC voltage network used.

The frequency of the AC voltage network can negatively affect the measured value, in particular when measuring in the low voltage range and with thermocouples. With this parameter, the user specifies the supply frequency that is predominant in the plant.

Potential group

A potential group consists of a group of directly adjacent I/O modules within an ET 200SP station, which are supplied via a common supply voltage.

A potential group begins with a light-colored BaseUnit through which the required voltage is supplied for all modules of the potential group. The light-colored BaseUnit interrupts the three self-assembling voltage buses P1, P2, and AUX to the left neighbor.

Specify the slot in which a light-colored BaseUnit with supply voltage infeed or a dark-colored BaseUnit is located (see system manual ET 200SP Distributed I/O system (https://support.industry.siemens.com/cs/ww/en/view/58649293)).

All additional I/O modules of this potential group are plugged into dark-colored BaseUnits. You take the potential of the self-assembling voltage buses P1, P2 and AUX from the left neighbor.

The station configuration must be completed with a server module.

5.4 Address space

The module can be configured differently; see following table. Depending on the configuration, additional/different addresses are assigned in the process image input.

Configuration options of AI 4×U/I 2-wire ST

You can configure the module with STEP 7 (TIA Portal) or with a GSD file. If you configure the module by means of a GSD file, the configurations are available under various short designations/module names; see the table below. The following configurations are possible:

Table 5-3 Configuration options with GSD file

Configuration	Short designation/module name in the GSD file	Configuration software, e.g. with STEP 7 (TIA Portal)	
		GSD file PROFINET IO	GSD file PROFIBUS DP
1 x 4-channel without value status	AI 4×U/I 2-wire ST V2.0	X	X
1 x 4-channel with value status	AI 4×U/I 2-wire ST V2.0, QI	X	X
1 x 4-channel without value status	AI 4×U/I 2-wire ST V3.0	X	X
1 x 4-channel with value status	AI 4×U/I 2-wire ST V3.0, QI	X	X

Value status (Quality Information, QI)

The value status is always activated for the following module names:

- AI 4×U/I 2-wire ST V2.0, QI
- AI 4×U/I 2-wire ST V3.0, QI

An additional bit is assigned to each channel for the value status. The bit for the value status indicates whether the input value read in by the user program is valid (0 = value is incorrect).

You can find more information on evaluating the value status in the system manual ET 200SP distributed I/O system (https://support.industry.siemens.com/cs/ww/en/view/58649293).

Address space with configuration as 1 x 4-channel AI 4×U/I 2-wire ST Vx.x

The following table shows the address space allocation when the module is configured as a 1 x 4-channel module without value status. You can freely assign the start address for the module. The addresses of the channels are derived from the start address. "IB" stands for input byte.

The table applies to the following configurations:

- AI 4×U/I 2-wire ST V2.0
- AI 4×U/I 2-wire ST V3.0

Table 5-4 Address space with configuration as 1 x 4-channel AI 4×U/I 2-wire ST Vx.x

Bit → / Byte ↓	Bit 7	Bit 6	Bit 5	Bit 4	Bit 3	Bit 2	Bit 1	Bit 0	Description
Assignment in the process image input (PII)									
IB x									Input value at channel 0
IB x +1									
IB x +2									Input value at channel 1
IB x +3									
IB x +4									Input value at channel 2
IB x +5									
IB x +6									Input value at channel 3
IB x +7									

Address space with configuration as 1 x 4-channel AI 4×U/I 2-wire ST Vx.x, QI

The following table shows the address space allocation when the module is configured as a 1 x 4-channel module with value status. You can freely assign the start address for the module. The addresses of the channels are derived from the start address. "IB" stands for input byte.

The table applies to the following configurations:

- AI 4×U/I 2-wire ST V2.0, QI
- AI 4×U/I 2-wire ST V3.0, QI

Table 5-5 Address space with configuration as 1 x 4-channel AI 4×U/I 2-wire ST Vx.x, QI

Bit → / Byte ↓	Bit 7	Bit 6	Bit 5	Bit 4	Bit 3	Bit 2	Bit 1	Bit 0	Description
Assignment in the process image input (PII)									
IB x									Input value at channel 0
IB x +1									
IB x +2									Input value at channel 1
IB x +3									
IB x +4									Input value at channel 2
IB x +5									
IB x +6									Input value at channel 3
IB x +7									
IB x +8	0	0	0	0	QI3	QI2	QI1	QI0	Value status (QI) at channels 0 ... 3 (QI0 ... QI3)

Interrupts/diagnostics alarms

6

6.1 Status and error displays

LED display

The figure below shows the LED displays (status and error displays) of the module.

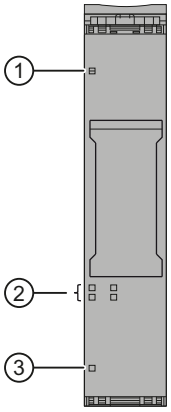

① DIAG (green/red)
② Channel status (green)
③ PWR (green)

Figure 6-1 LED display

Meaning of the LED displays

The following tables explain the meaning of the status and error displays. Measures for dealing with diagnostics alarms can be found in the section Diagnostics alarms (Page 29).

DIAG LED

Table 6-1 DIAG LED fault/error display

DIAG LED	Meaning
Off	Backplane bus supply of the system is interrupted or switched off
Flashes	Module parameters not assigned
On	Module parameters assigned and no module diagnostics available
Flashes	Module parameters assigned and module diagnostics available

Channel status LED

Table 6-2 Status display of the channel status LED

Channel status LED	Meaning
Off	Channel disabled
On	Channel activated

PWR LED

Table 6-3 Status display of the PWR LED

PWR LED	Meaning
Off	No supply voltage L+
On	Supply voltage L+ present

6.2 Interrupts

Introduction

The IO device generates interrupts as a reaction to specific error events. Interrupts are evaluated based on the IO controller used.

Evaluating interrupts with IO controllers

The module supports the following interrupts

- Diagnostics interrupts
- Maintenance events

In the event of an interrupt, interrupt OBs are automatically called in the CPU of the IO controller.

Information on the cause and type of the error is already available, based on the OB number and start information.

Detailed information on the error event can be obtained in the error OB using the instruction "RALRM" (read additional interrupt information).

6.2.1 Triggering of a diagnostics interrupt

Triggering of a diagnostics interrupt

For an incoming or outgoing event (e.g. wire break on a channel of an I/O module), the module triggers a diagnostics interrupt if this is configured accordingly.

The CPU interrupts processing of the user program and processes the diagnostics block OB 82. The event which led to the interrupt is entered in the start information of the OB 82.

6.2.2 Triggering of a maintenance event

Triggering of a maintenance event

For the module, maintenance events signal to the user when a plant component needs to be checked or replaced.

The CPU interrupts the processing of the user program and processes the diagnostic error interrupt OB (OB 82). The event that triggered the maintenance event is entered in the start information of the diagnostic error interrupt OB.

6.3 Alarms

Introduction

The module generates the following alarms:

- Diagnostics alarms
- Maintenance alarms

6.3.1 Diagnostics alarms

Diagnostics alarms

A diagnostics alarm is generated and the DIAG LED flashes red on the module for each diagnostics event. You can read out the diagnostics alarms, for example, in the diagnostics buffer of the CPU. You can evaluate the error codes with the user program.

Table 6-4 Diagnostics alarms, their meaning and remedies

Diagnostics alarms	Error code	Meaning	Solution
Short-circuit (current)[1)]	1_H	Encoder supply to ground	Correct interplay between module and encoder
		Input after encoder supply	

1) Short-circuit of the encoder supply to ground and/or of the input signal to the encoder supply of a channel can have a temporary (duration < 0.5 s) effect on other channels. This means the short-circuit diagnostics can also be reported for unaffected channels and/or the measured value can be affected temporarily.

2) With activated smoothing, the module calculates the measured values across several module cycles. The module only generates the short-circuit or wire break diagnostics if the smoothed measured value is stable. After the short-circuit or wire break has been eliminated, the module supplies stable measured values again depending on the set smoothing level.

3) The alarm relates to the diagnostics and depends on the configured measuring range.

Diagnostics alarms	Error code	Meaning	Solution
Short-circuit (1 to 5 V)[2]	1_H	Short-circuit of input signal	Correct interplay between module and encoder
		Open input	Connect input
Short-circuit (supply voltage)[1]	1_H	Encoder supply to ground	Correct interplay between module and encoder
Wire break (current 4 to 20 mA)[2]	6_H	Resistance of sensor circuit too high	Use a different sensor type or modify the wiring, for example, using cables with larger cross-section
		Wire break between the module and sensor	Connect the cable
		Channel not connected (open)	• Deactivate diagnostics • Connect or deactivate the channel
High limit violated[3]	7_H	Value lies above the overrange.	Correct module/sensor interplay
Low limit violated[3]	8_H	Value lies below the underrange.	Correct module/sensor interplay
Error	9_H	Internal module error has occurred (diagnostics alarm on channel 0 applies to the entire module).	Replace module
Parameter assignment error	10_H	The module cannot evaluate parameters for the channel. Incorrect parameter assignment.	Correct the parameter assignment, e.g.: Wire break diagnostics set only with the permitted measuring ranges.
Supply voltage missing	11_H	Missing or insufficient supply voltage L+	• Check the supply voltage L+ at the BaseUnit • Check BaseUnit type
Channel temporarily unavailable	$1F_H$	Firmware update is currently in progress or has been canceled. The module does not read in process values in this state.	• Wait for firmware update. • Restart the firmware update.
		The channel is currently being calibrated.	• Complete calibration.

1) Short-circuit of the encoder supply to ground and/or of the input signal to the encoder supply of a channel can have a temporary (duration < 0.5 s) effect on other channels. This means the short-circuit diagnostics can also be reported for unaffected channels and/or the measured value can be affected temporarily.

2) With activated smoothing, the module calculates the measured values across several module cycles. The module only generates the short-circuit or wire break diagnostics if the smoothed measured value is stable. After the short-circuit or wire break has been eliminated, the module supplies stable measured values again depending on the set smoothing level.

3) The alarm relates to the diagnostics and depends on the configured measuring range.

NOTE

Diagnostic messages in the measured value of analog input modules

Each analog input module supplies the measured value $7FFF_H$ or 8000_H depending on the parameter assignment when an error is detected.

6.3.2 Maintenance alarms

For the module, maintenance events signal to the user when a plant component needs to be checked or replaced.

The CPU interrupts the processing of the user program and processes the diagnostic error interrupt OB (OB 82). The event that triggered the maintenance event is entered in the start information of the diagnostic error interrupt OB.

Maintenance required alarms

Every time maintenance required is detected, a maintenance event is generated. However, it has no influence on the LED DIAG on the module.

NOTE

Maintenance alarms have no direct influence on the function of the module.

Table 6-5 Maintenance required alarms, their meaning and possible remedies

Maintenance required alarm	Error code	Meaning / Cause	Solution
Security event: Firmware successfully downloaded and activated for use after a reset	0191_H	The firmware was successfully loaded into the module. This firmware update takes effect after the module is restarted.	-
Security event: Firmware integrity checks failed.	0192_H	The firmware was not successfully loaded into the module. This can have many different reasons, e.g. corrupted binary files or an incorrect signature.	Verify if the firmware update file you are using comes from a secure source. Download the firmware again from the Siemens support website and repeat the firmware update.

System events in STEP 7 (TIA Portal)

The maintenance information is generated in STEP 7 (TIA Portal) with the following system events:

- Maintenance required - indicated for each port by a wrench with a green background in the device view or in the hardware configuration.

You can find more information in the STEP 7 online help.

Technical specifications

7

7.1 Technical specifications

Technical specifications of the AI 4×U/I 2-wire ST

The following table lists the current technical specifications on the issue date. You will find a data sheet including daily updated technical specifications on the Internet (https://support.industry.siemens.com/cs/ww/en/pv/6ES7134-6HD01-0BA1/td?dl=en).

Article number	6ES7134-6HD01-0BA1
General information	
Product type designation	AI 4x U/I 2-wire ST
HW functional status	FS22 or higher
Firmware version	V3.0.0
• FW update possible	Yes
usable BaseUnits	BU type A0, A1
Color code for module-specific color-coded label	CC03
Product function	
• I&M data	Yes; I&M0 to I&M3
• Isochronous mode	No
• Measuring range scalable	No
Engineering with	
• STEP 7 TIA Portal configurable/integrated from version	V21.1 or higher
• STEP 7 configurable/integrated from version	configurable as of V5.7.3.3 with HSP0348 V3.0 / integrated as of V5.7.5.0
• PROFIBUS from GSD version/GSD revision	One GSD file each, Revision 3 and 5 and higher
• PROFINET from GSD version/GSD revision	GSDML V2.50
Operating mode	
• Oversampling	No
• MSI	No
CiR - Configuration in RUN	
Reparameterization possible in RUN	Yes
Calibration possible in RUN	No
Supply voltage	
Rated value (DC)	24 V
permissible range, lower limit (DC)	19.2 V
permissible range, upper limit (DC)	28.8 V
Reverse polarity protection	Yes
Input current	
Current consumption (rated value)	30 mA
Current consumption, max.	117 mA

Article number	**6ES7134-6HD01-0BA1**
Encoder supply	
24 V encoder supply	
• 24 V	Yes; For current measurement
• Short-circuit protection	Yes
• Output current, max.	20 mA; max. 50 mA per channel for a duration < 10 s
Power loss	
Power loss, typ.	0.85 W
Address area	
Address space per module	
• Address space per module, max.	8 byte; + 1 byte for QI information
Hardware configuration	
Automatic encoding	Yes
• Mechanical coding element	Yes
• Type of mechanical coding element	Type A
Selection of BaseUnit for connection variants	
• 2-wire connection	BU type A0, A1
Analog inputs	
Number of analog inputs	4; Differential inputs
• For current measurement	4
• For voltage measurement	4
permissible input voltage for voltage input (destruction limit), max.	30 V
permissible input current for current input (destruction limit), max.	50 mA
Cycle time (all channels), min.	Sum of the basic conversion times and additional processing times (depending on the parameterization of the active channels)
Input ranges (rated values), voltages	
• 0 to +10 V	Yes; 15 bit
– Input resistance (0 to 10 V)	120 kΩ
• 1 V to 5 V	Yes; 15 bit
– Input resistance (1 V to 5 V)	120 kΩ
• -10 V to +10 V	Yes; 16 bit incl. sign
– Input resistance (-10 V to +10 V)	120 kΩ
• -5 V to +5 V	Yes; 16 bit incl. sign
– Input resistance (-5 V to +5 V)	120 kΩ
Input ranges (rated values), currents	
• 0 to 20 mA	Yes; 15 bit
– Input resistance (0 to 20 mA)	100 Ω; + approx. 0.7 V diode forward voltage
• 4 mA to 20 mA	Yes; 15 bit
– Input resistance (4 mA to 20 mA)	100 Ω; + approx. 0.7 V diode forward voltage
Cable length	
• shielded, max.	1 000 m; 200 m for voltage measurement
Analog value generation for the inputs	
Measurement principle	Sigma Delta

Article number	6ES7134-6HD01-0BA1
Integration and conversion time/resolution per channel	
• Resolution with overrange (bit including sign), max.	16 bit
• Integration time, parameterizable	Yes
• Interference voltage suppression for interference frequency f1 in Hz	16.6 / 50 / 60 Hz
• Conversion time (per channel)	180 / 60 / 50 ms
Smoothing of measured values	
• Number of smoothing levels	4
• parameterizable	Yes
• Step: None	Yes; 1x conversion time
• Step: low	Yes; 4x conversion time
• Step: Medium	Yes; 8x conversion time
• Step: High	Yes; 16x conversion time
Encoder	
Connection of signal encoders	
• for voltage measurement	Yes
• for current measurement as 2-wire transducer	Yes
– Burden of 2-wire transmitter, max.	650 Ω
Errors/accuracies	
Linearity error (relative to input range), (+/-)	0.01 %
Temperature error (relative to input range), (+/-)	0.005 %/K
Crosstalk between the inputs, min.	-50 dB
Repeat accuracy in steady state at 25 °C (relative to input range), (+/-)	0.05 %
Operational error limit in overall temperature range	
• Voltage, relative to input range, (+/-)	0.5 %
• Current, relative to input range, (+/-)	0.5 %
Basic error limit (operational limit at 25 °C)	
• Voltage, relative to input range, (+/-)	0.3 %
• Current, relative to input range, (+/-)	0.3 %
Interference voltage suppression for f = n x (f1 +/- 1 %), f1 = interference frequency	
• Series mode interference (peak value of interference < rated value of input range), min.	70 dB
• Common mode voltage, max.	10 V
• Common mode interference, min.	90 dB
Interrupts/diagnostics/status information	
Diagnostics function	Yes
Alarms	
• Diagnostic alarm	Yes
• Limit value alarm	No

Article number	6ES7134-6HD01-0BA1
Diagnoses	
• Monitoring the supply voltage	Yes
• Wire break	Yes; at 4 to 20 mA
• Short-circuit	Yes; with 1 to 5 V or 2-wire mode: Short-circuit of the encoder supply to ground or of an input to the encoder supply
• Overflow/Underflow	Yes
Diagnostics indication LED	
• Monitoring of the supply voltage (PWR-LED)	Yes; green LED
• Channel status display	Yes; green LED
• for channel diagnostics	No
• for module diagnostics	Yes; green/red LED
Potential separation	
Potential separation channels	
• between the channels	Yes; channel group-specific between 2-wire current input group and voltage input group
• between the channels and backplane bus	Yes
• between the channels and the power supply of the electronics	Yes; only for voltage inputs
Permissible potential difference	
between the inputs (UCM)	10 Vpp
Isolation	
Isolation tested with	707 V DC (type test)
Security	
signed firmware update	Yes; Firmware V3.0.0 or higher
Ambient conditions	
Ambient temperature during operation	
• horizontal installation, min.	-30 °C; < 0 °C as of FS02
• horizontal installation, max.	60 °C
• vertical installation, min.	-30 °C; < 0 °C as of FS02
• vertical installation, max.	50 °C
Altitude during operation relating to sea level	
• Installation altitude above sea level, max.	5 000 m; Restrictions for installation altitudes > 2 000 m, see manual
Absolute humidity	
• dew point, min.	-60 °C; suitable for dry room applications
Dimensions	
Width	15 mm
Height	73 mm
Depth	58 mm
Weights	
Weight, approx.	31 g

Dimension drawing

See manual ET 200SP BaseUnits
(http://support.automation.siemens.com/WW/view/en/59753521)

Parameter data record

A

A.1 Dependencies when configuring with GSD file

When configuring the module with a GSD file, remember that the settings of some parameters are dependent on each other.

Configuring with a PROFINET GSD file

The table lists the properties and their dependencies on the measuring type and measuring range for PROFINET.

Measuring type	Measuring range	Diagnostics				
		No supply voltage L+	Short-circuit to M	Overflow	Underflow	Wire break
deactivated		*	*	*	*	*
Voltage	±5 V	x	-	x	x	-
	±10 V	x	-	x	x	-
	1..5 V	x	x	x	x	-
	0..10 V	x	-	x	x	-
Current (2-wire transducer)	0..20 mA	x	x	x	x	-
	4..20 mA	x	x	x	x	x

x = Property is allowed, - = Property is **not allowed**, * = Property is not relevant

Configuring with a PROFIBUS GSD file

The table lists the properties and their dependencies on the measuring type and measuring range for PROFIBUS.

Measuring type	Measuring range	Diagnostics			
		No supply voltage L+	Short-circuit to M	Overflow/ Underflow	Wire break
deactivated		*	*	*	*
Voltage	±5 V	x	-	x	-
	±10 V	x	-	x	-
	1..5 V	x	x	x	-
	0..10 V	x	-	x	-
Current (2-wire transducer)	0..20 mA	x	x	x	-
	4..20 mA	x	x	x	x

x = Property is allowed, - = Property is **not allowed**, * = Property is not relevant

A.2 Parameter assignment and structure of the parameter data record

The data record of the module has an identical structure, regardless of whether you configure the module with PROFIBUS DP or PROFINET IO. With data record 128, you can reconfigure the module in your user program regardless of your programming. This means that you can use all the functions of the module even if you configured it via PROFIBUS GSD.

Parameter assignment in the user program

You can reassign the parameters of the module in RUN. For example, the measuring range of selected channels can be changed in RUN without having an effect on the other channels.

Changing parameters in RUN

The "WRREC" instruction is used to transfer the parameters to the module using data record 128. The parameters set in STEP 7 are not changed in the CPU, which means that the parameters set in STEP 7 will be valid again after a restart.

Output parameter STATUS

If errors occur when transferring parameters with the "WRREC" instruction, the module continues operation with the previous parameter assignment. The STATUS output parameter contains a corresponding error code.

You will find a description of the "WRREC" instruction and the error codes in the STEP 7 online help.

Structure of data record 128

NOTE

Channel 0 contains the diagnostics for the entire module.

The following table shows the structure of data record 128.

Table A-1 Structure of data record 128

Bit → / Byte ↓	Bit 7	Bit 6	Bit 5	Bit 4	Bit 3	Bit 2	Bit 1	Bit 0
0...1	**Header information**							
0	Reserved[1)]		Major Version = 00_B		Minor Version = 0000_B			
1	Length of a following channel parameter block = 18_D ($0001\ 0010_B$)							
2...19	**Channel 0 channel parameter block**							
2	Measurement type BYTE: See table Codes for the measurement type (Page 39)							
3	Measuring range BYTE: See table Codes for the measuring range (Page 40)							

1 Reserved bits must be set to 0

Bit → / Byte ↓	Bit 7	Bit 6	Bit 5	Bit 4	Bit 3	Bit 2	Bit 1	Bit 0
4	Reserved[1)]							
5	Interference frequency suppression BYTE: See table Codes for interference frequency suppression (Page 40)				Smoothing BYTE: See table Codes for the smoothing (Page 40)			
6	Reserved[1)]							
7	Reserved[1)]							
8	**Enable diagnostics**							
	Diagnostics: Overflow	Diagnostics: Underflow	Reserved[1)]	Diagnostics: Wire break	Reserved[1)]	Diagnostics: Short-circuit to ground	Reserved[1)]	Diagnostics No supply voltage L+
	0_B: Deactivated 1_B: Activated	0_B: Deactivated 1_B: Activated		0_B: Deactivated 1_B: Activated		0_B: Deactivated 1_B: Activated		0_B: Deactivated 1_B: Activated
9...19	Reserved[1)]							
20...37	**Channel 1 channel parameter block**							
38...55	**Channel 2 channel parameter block**							
56...73	**Channel 3 channel parameter block**							

1 Reserved bits must be set to 0

A.3 Code for the measurement type

Code for the measurement type

The following table contains all the measurement types of the analog input module with its codes. These codes must be entered in byte 2.

Table A-2 Code for the measurement type

Measuring type	Code
Deactivated	0000 0000
Voltage	0000 0001
Current, 2-wire transducer	0000 0011

A.4 Code for the measuring range

Code for the measuring range

The following table contains all codes for the measuring ranges of the analog input module. These codes must be entered in byte 3.

Table A-3 Code for the measuring range

Measuring range	Code
Voltage ±5 V ±10 V 1 to 5 V 0 to 10 V	 0000 1000 0000 1001 0000 1010 0000 1011
Current 0 to 20 mA 4 to 20 mA	 0000 0010 0000 0011

A.5 Codes for interference frequency suppression

Codes for interference frequency suppression

The following table contains all codes for the interference frequency suppression. These codes must be entered in byte 5.

Table A-4 Codes for interference frequency suppression

Interference frequency suppression	Code
60 Hz (50 ms)	0001
50 Hz (60 ms)	0010
16.6 Hz (180 ms)	0100

A.6 Codes for smoothing

Codes for smoothing

The following table contains all the codes for the smoothing. These codes must be entered in byte 5.

Table A-5 Codes for smoothing

Smoothing	Code
None	0000
Weak	0001
Medium	0010
Strong	0011

A.7 Error codes

Error transferring the data record

The module always checks all values of the data record to be sent. The module applies the values from the data record only when all values have been transmitted without errors.

The WRREC instruction for writing data records returns corresponding error codes when errors occur in the STATUS parameter, see also the description of the "STATUS" parameter in the STEP 7 online help).

The following table shows the module-specific error codes and their meaning for parameter data record 128.

Error code in STATUS parameter (hexadecimal)				Meaning	Solution
Byte 0	Byte 1	Byte 2	Byte 3		
DF	80	B0	00	Number of the data record unknown	Enter valid number for data record
DF	80	B1	01	Length of the data record incorrect	Enter valid value for data record length
DF	80	B2	00	Module not accessible	• Check station • Plug the module in correctly • Check the parameters of the WRREC block
DF	80	E0	01	Header error (version or specified bits incorrect)	Correct the version number or fixed bits.
DF	80	E0	02	Header error (number or length of parameter structures or parameter blocks incorrect)	Correct the number and length of the parameter structures or parameter blocks.
DF	80	E1	01	Reserved bit set	Write 0 to all reserved bits
DF	80	E1	02	Invalid diagnostics enable bit set for the operating mode	Check the parameters of the module
DF	80	E1	05	Invalid code set for measuring range / measurement type	Check the parameters of the module
DF	80	E1	08	Invalid code set for interference frequency suppression / integration time	Check the parameters of the module
DF	80	E1	09	Invalid code set for smoothing	Check the parameters of the module

Representation of analog values

B

This appendix shows the analog values for all measuring ranges that you can use with the analog module.

Measured value resolution

The resolution of the analog values differs depending on the analog module and its assigned parameters.

The table below shows the representation of binary analog values and of the associated decimal and hexadecimal units of the analog values.

Each analog value is written left aligned to the tags. The bits marked with "x" are set to "0".

Table B-1 Resolution of the analog values

Resolution in bits including sign	Values		Analog value	
	Decimal	Hexadecimal	High byte	Low byte
14	4	4_H	Sign 0 0 0 0 0 0 0	0 0 0 0 0 1 x x
15	2	2_H	Sign 0 0 0 0 0 0 0	0 0 0 0 0 0 1 x
16	1	1_H	Sign 0 0 0 0 0 0 0	0 0 0 0 0 0 0 1

B.1 Representation of input ranges

In the following tables, you can find the digitized representation of the bipolar and unipolar input ranges. The resolution is 16 bits.

Table B-2 Bipolar input ranges

Dec. value	Measured value in %	Data word																Range
		2^{15}	2^{14}	2^{13}	2^{12}	2^{11}	2^{10}	2^9	2^8	2^7	2^6	2^5	2^4	2^3	2^2	2^1	2^0	
32767	>117.589	0	1	1	1	1	1	1	1	1	1	1	1	1	1	1	1	Overflow
32511	117.589	0	1	1	1	1	1	1	0	1	1	1	1	1	1	1	1	Overrange
27649	100.004	0	1	1	0	1	1	0	0	0	0	0	0	0	0	0	1	
27648	100.000	0	1	1	0	1	1	0	0	0	0	0	0	0	0	0	0	Nominal range
1	0.003617	0	0	0	0	0	0	0	0	0	0	0	0	0	0	0	1	
0	0.000	0	0	0	0	0	0	0	0	0	0	0	0	0	0	0	0	
-1	-0.003617	1	1	1	1	1	1	1	1	1	1	1	1	1	1	1	1	
-27648	-100.000	1	0	0	1	0	1	0	0	0	0	0	0	0	0	0	0	
-27649	-100.004	1	0	0	1	0	0	1	1	1	1	1	1	1	1	1	1	Underrange
-32512	-117.593	1	0	0	0	0	0	0	1	0	0	0	0	0	0	0	0	
-32768	<-117.593	1	0	0	0	0	0	0	0	0	0	0	0	0	0	0	0	Underflow

Table B-3 Unipolar input ranges

Dec. value	Measured value in %	Data word																Range
		2^{15}	2^{14}	2^{13}	2^{12}	2^{11}	2^{10}	2^{9}	2^{8}	2^{7}	2^{6}	2^{5}	2^{4}	2^{3}	2^{2}	2^{1}	2^{0}	
32767	>117.589	0	1	1	1	1	1	1	1	1	1	1	1	1	1	1	1	Overflow
32511	117.589	0	1	1	1	1	1	1	0	1	1	1	1	1	1	1	1	Overrange
27649	100.004	0	1	1	0	1	1	0	0	0	0	0	0	0	0	0	1	
27648	100.000	0	1	1	0	1	1	0	0	0	0	0	0	0	0	0	0	Nominal range
1	0.003617	0	0	0	0	0	0	0	0	0	0	0	0	0	0	0	1	
0	0.000	0	0	0	0	0	0	0	0	0	0	0	0	0	0	0	0	
-1	-0.003617	1	1	1	1	1	1	1	1	1	1	1	1	1	1	1	1	Underrange
-4864	-17.593	1	1	1	0	1	1	0	1	0	0	0	0	0	0	0	0	
-32768	<-17.593	1	0	0	0	0	0	0	0	0	0	0	0	0	0	0	0	Underflow

B.2 Representation of analog values in voltage measuring ranges

The following tables list the decimal and hexadecimal values (codes) of the possible voltage measuring ranges.

Table B-4 Voltage measuring range ±10 V and ±5 V

Values		Voltage measuring range		Range
Dec.	**Hex.**	**±10 V**	**±5 V**	
32767	7FFF	>11.759 V	>5.879 V	Overflow
32511	7EFF	11.759 V	5.879 V	Overrange
27649	6C01			
27648	6C00	10 V	5 V	Nominal range
20736	5100	7.5 V	3.75 V	
1	1	361.7 µV	180.8 µV	
0	0	0 V	0 V	
-1	FFFF			
-20736	AF00	-7.5 V	-3.75 V	
-27648	9400	-10 V	-5 V	
-27649	93FF			Underrange
-32512	8100	-11.759 V	-5.879 V	
-32768	8000	<-11.759 V	<-5.879 V	Underflow

Table B-5 Voltage measuring range 1 to 5 V and 0 to 10 V

Values		Voltage measuring range		Range
Dec.	**Hex.**	**1 to 5 V**	**0 to 10 V**	
32767	7FFF	>5.704 V	>11.759 V	Overflow
32511	7EFF	5.704 V	11.759 V	Overrange
27649	6C01			
27648	6C00	5 V	10 V	Nominal range
20736	5100	4 V	7.5 V	
1	1	1 V + 144.7 µV	0 V + 361.7 µV	
0	0	1 V	0 V	
-1	FFFF			Underrange **
-4864	ED00	0.296 V	-1.759 V *	
-32768	8000	<0.296 V	<-1.759 V *	Underflow **

* negative values are only possible if the module (6ES7134-6GD**01**-0BA1) with FW version V2.0.0 and higher is configured.
** no underrange/underflow if the predecessor module (6ES7134-6GD**00**-0BA1) is configured.

B.3 Representation of analog values in the current measuring ranges

The following tables list the decimal and hexadecimal values (codes) of the possible current measuring ranges.

Table B-6 Current measuring ranges 0 to 20 mA and 4 to 20 mA

Values		Current measuring range		Range
Dec.	**Hex.**	**0 to 20 mA ***	**4 to 20 mA**	
32767	7FFF	>23.52 mA	>22.81 mA	Overflow
32511	7EFF	23.52 mA	22.81 mA	Overrange
27649	6C01			
27648	6C00	20 mA	20 mA	Nominal range
20736	5100	15 mA	16 mA	
1	1	723.4 nA	4 mA + 578.7 nA	
0	0	0 mA	4 mA	
-1	FFFF			Underrange
-4864	ED00	-3.52 mA	1.185 mA	
-32768	8000	<-3.52 mA	<1.185 mA	Underflow

* For measuring type "2-wire transducer", negative values are not possible for the range "0 to 20 mA". Therefore, no underrange or underflow exists here.

B.4 Measured values for wire break

The following table contains the measured values at a wire break depending on enabled diagnostics.

Table B-7 Measured values at a wire break depending on enabled diagnostics

Programmable diagnostics		Measured value		Explanation
Wire break	**Underflow**			
Enable	Enable	32767	$7FFF_H$	The "wire break" diagnostics is reported, because this has a higher priority.
Disable	Enable	-32768	8000_H	The "Lower limit violated" diagnostics is reported.
Disable	Disable	-32768	8000_H	No diagnostics reported.