SIEMENS

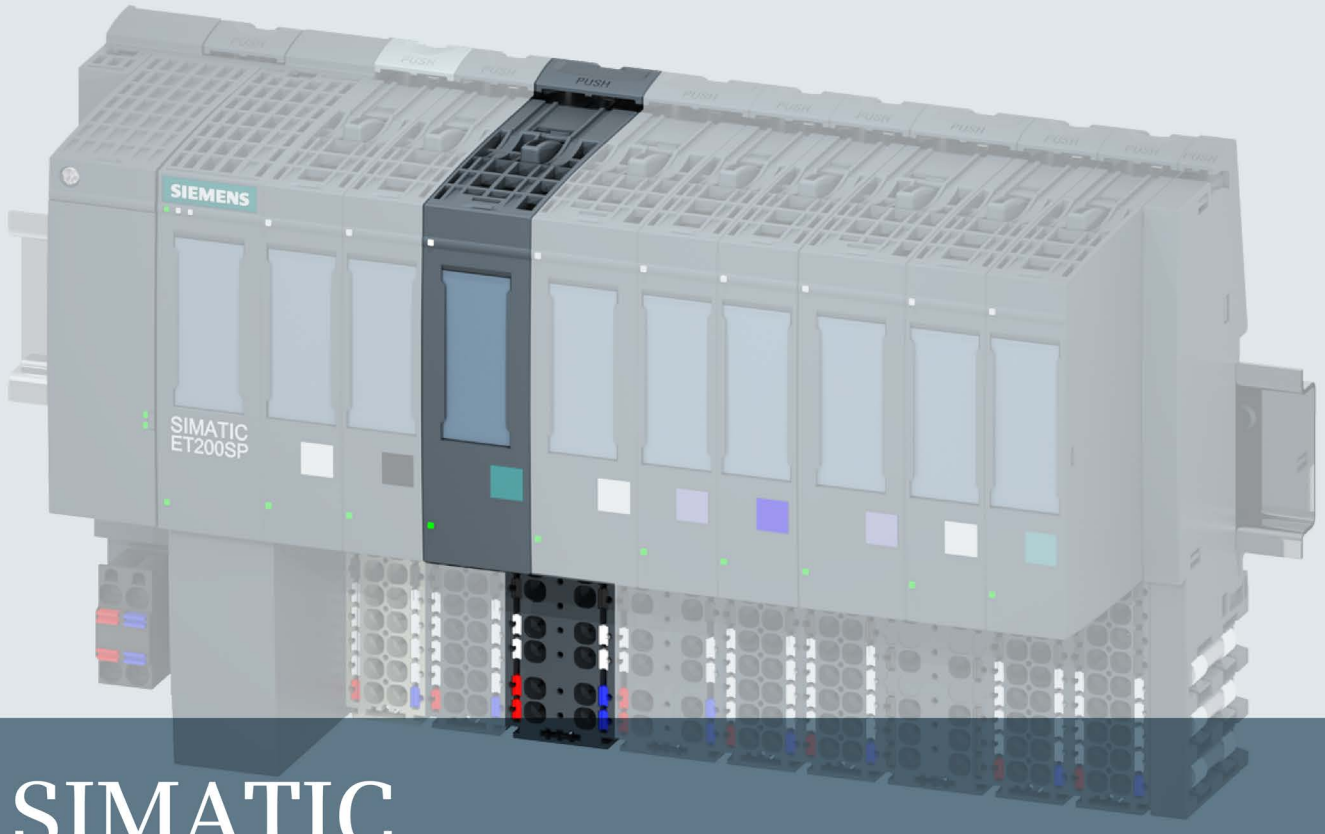


# SIMATIC

## ET 200SP

Technology module TM ECC 2xPWM ST

Product manual

Version 07/2020

Answers for industry.

SIEMENS

# SIMATIC

# ET 200SP Technology module TM ECC 2xPWM ST (6FE1242-6TM10-0BB1)

**Equipment Manual**


Preface

Documentation guide 1

Product overview 2

Wiring 3

Configuring/address space 4

Programming 5

Interrupts/diagnostic messages 6

Technical specifications 7



**07/2020**

A5E42681298B-AB

## Legal information

### Warning notice system

This manual contains notices you have to observe in order to ensure your personal safety, as well as to prevent damage to property. The notices referring to your personal safety are highlighted in the manual by a safety alert symbol, notices referring only to property damage have no safety alert symbol. These notices shown below are graded according to the degree of danger.

**⚠ DANGER**

indicates that death or severe personal injury **will** result if proper precautions are not taken.

**⚠ WARNING**

indicates that death or severe personal injury **may** result if proper precautions are not taken.

**⚠ CAUTION**

indicates that minor personal injury can result if proper precautions are not taken.

**NOTICE**

indicates that property damage can result if proper precautions are not taken.

If more than one degree of danger is present, the warning notice representing the highest degree of danger will be used. A notice warning of injury to persons with a safety alert symbol may also include a warning relating to property damage.

### Qualified Personnel

The product/system described in this documentation may be operated only by **personnel qualified** for the specific task in accordance with the relevant documentation, in particular its warning notices and safety instructions. Qualified personnel are those who, based on their training and experience, are capable of identifying risks and avoiding potential hazards when working with these products/systems.

### Proper use of Siemens products

Note the following:

**⚠ WARNING**

Siemens products may only be used for the applications described in the catalog and in the relevant technical documentation. If products and components from other manufacturers are used, these must be recommended or approved by Siemens. Proper transport, storage, installation, assembly, commissioning, operation and maintenance are required to ensure that the products operate safely and without any problems. The permissible ambient conditions must be complied with. The information in the relevant documentation must be observed.

### Trademarks

All names identified by ® are registered trademarks of Siemens AG. The remaining trademarks in this publication may be trademarks whose use by third parties for their own purposes could violate the rights of the owner.

### Disclaimer of Liability

We have reviewed the contents of this publication to ensure consistency with the hardware and software described. Since variance cannot be precluded entirely, we cannot guarantee full consistency. However, the information in this publication is reviewed regularly and any necessary corrections are included in subsequent editions.

Siemens AG
Division Digital Factory
Postfach 48 48
90026 NÜRNBERG
GERMANY

A5E42681298B-AB
Ⓟ 08/2020 Subject to change

Copyright © Siemens AG 2017 - 2020.
All rights reserved

# Preface

## Preface

## Purpose of the documentation

This manual contains module-specific information on wiring, diagnostics as well as the technical specifications of the technology module.

General information on installation and commissioning of the ET 200SP is available in the ET 200SP System Manual.

## Conventions

Please take into account the notes marked as follows:

**Note**

A note contains important information on the product described in this documentation, its handling and to a section of the documentation to which you should pay particular attention.

## Security information

Siemens provides products and solutions with industrial security functions that support the secure operation of plants, systems, machines and networks.

In order to protect plants, systems, machines and networks against cyber threats, it is necessary to implement – and continuously maintain – a holistic, state-of-the-art industrial security concept. Siemens' products and solutions constitute one element of such a concept.

Customers are responsible for preventing unauthorized access to their plants, systems, machines and networks. Such systems, machines and components should only be connected to an enterprise network or the internet if and to the extent such a connection is necessary and only when appropriate security measures (e.g. firewalls and/or network segmentation) are in place.

For additional information on industrial security measures that may be implemented, please visit.

Siemens' products and solutions undergo continuous development to make them more secure. Siemens strongly recommends that product updates are applied as soon as they are available and that the latest product versions are used. Use of product versions that are no longer supported, and failure to apply the latest updates may increase customers' exposure to cyber threats.

To stay informed about product updates, subscribe to the Siemens Industrial Security RSS Feed under.

## See also

IndustrialSecurity (http://www.siemens.com/industrialsecurity)

http://support.automation.siemens.com (http://support.automation.siemens.com)

# Table of contents


**Preface** ... **3**

**1 Documentation guide** ... **7**

**2 Product overview** ... **11**

2.1 Properties ... 11

**3 Wiring** ... **17**

3.1 Terminal assignment and power supply ... 17

3.2 Connection examples ... 26

**4 Configuring/address space** ... **31**

4.1 Configuring ... 31

4.2 Reaction to CPU STOP ... 32

4.3 Required I/O address space ... 32

4.4 Parameter ... 33

4.5 Control and feedback interface ... 35

4.5.1 Assignment of the control interface ... 35

4.5.2 Assignment of the feedback Interface ... 38

**5 Programming** ... **41**

5.1 General information ... 41

5.2 "ECC4100" functions ... 41

5.3 FC ECC4100 parameters ... 42

**6 Interrupts/diagnostic messages** ... **47**

6.1 Status and error displays ... 47

6.2 Interrupts ... 50

6.3 Diagnostics alarms ... 50

6.4 Device defect ... 52

**7 Technical specifications** ... **53**

7.1 Technical specifications ... 53

**Index** ... **57**

# Documentation guide

# 1

The documentation for the SIMATIC S7-1500 automation system and the SIMATIC ET 200MP distributed I/O system is arranged into three areas.
This arrangement enables you to access the specific content you require.

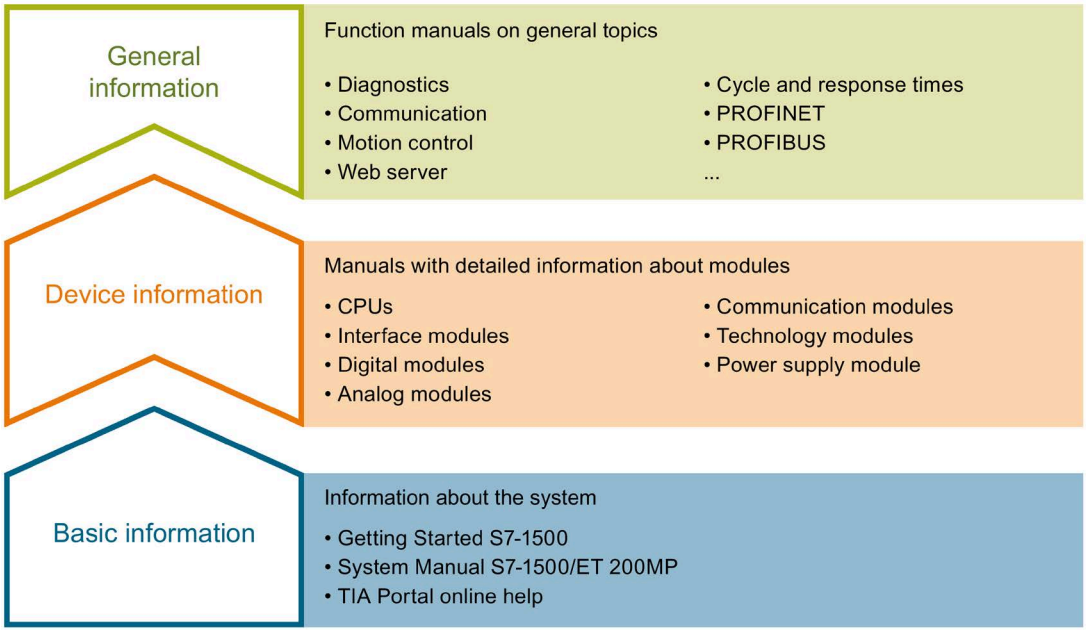


### Basic information

The System Manual and Getting Started describe in detail the configuration, installation, wiring and commissioning of the SIMATIC S7-1500 and ET 200MP systems. The STEP 7 online help supports you in the configuration and programming.

### Device information

Product manuals contain a compact description of the module-specific information, such as properties, wiring diagrams, characteristics and technical specifications.

### General information

The function manuals contain detailed descriptions on general topics regarding the SIMATIC S7-1500 and ET 200MP systems, e.g. diagnostics, communication, motion control, Web server, OPC UA.

You can download the documentation free of charge from the Internet (http://w3.siemens.com/mcms/industrial-automation-systems-simatic/en/manual-overview/Pages/Default.aspx).

Changes and supplements to the manuals are documented in a Product Information.

You can download the product information free of charge from the Internet (https://support.industry.siemens.com/cs/us/en/view/68052815).

### Manual Collection S7-1500/ET 200MP

The Manual Collection contains the complete documentation on the SIMATIC S7-1500 automation system and the ET 200MP distributed I/O system gathered together in one file.

You can find the Manual Collection on the Internet (https://support.industry.siemens.com/cs/ww/en/view/86140384).

### SIMATIC S7-1500 comparison list for programming languages

The comparison list contains an overview of which instructions and functions you can use for which controller families.

You can find the comparison list on the Internet (https://support.industry.siemens.com/cs/ww/en/view/86630375).

### "mySupport"

With "mySupport", your personal workspace, you make the best out of your Industry Online Support.

In "mySupport", you can save filters, favorites and tags, request CAx data and compile your personal library in the Documentation area. In addition, your data is already filled out in support requests and you can get an overview of your current requests at any time.

You must register once to use the full functionality of "mySupport".

You can find "mySupport" on the Internet (https://support.industry.siemens.com/My/ww/en).

### "mySupport" - Documentation

In the Documentation area in "mySupport" you can combine entire manuals or only parts of these to your own manual.
You can export the manual as PDF file or in a format that can be edited later.

You can find "mySupport" - Documentation on the Internet (http://support.industry.siemens.com/My/ww/en/documentation).

### "mySupport" - CAx data

In the CAx data area in "mySupport", you can access the current product data for your CAx or CAe system.

You configure your own download package with a few clicks.

In doing so you can select:

- Product images, 2D dimension drawings, 3D models, internal circuit diagrams, EPLAN macro files
- Manuals, characteristics, operating manuals, certificates
- Product master data

You can find "mySupport" - CAx data on the Internet (http://support.industry.siemens.com/my/ww/en/CAxOnline).

## Application examples

The application examples support you with various tools and examples for solving your automation tasks. Solutions are shown in interplay with multiple components in the system - separated from the focus on individual products.

You will find the application examples on the Internet (https://support.industry.siemens.com/sc/ww/en/sc/2054).

## TIA Selection Tool

With the TIA Selection Tool, you can select, configure and order devices for Totally Integrated Automation (TIA).
This tool is the successor of the SIMATIC Selection Tool and combines the known configurators for automation technology into one tool.
With the TIA Selection Tool, you can generate a complete order list from your product selection or product configuration.

You can find the TIA Selection Tool on the Internet (http://w3.siemens.com/mcms/topics/en/simatic/tia-selection-tool).

## SIMATIC Automation Tool

You can use the SIMATIC Automation Tool to perform commissioning and maintenance activities simultaneously on various SIMATIC S7 stations as a bulk operation independent of the TIA Portal.

General function overview:

- Network browsing and creation of a table showing the accessible devices in the network.
- Flashing of device LEDs or HMI display to locate a device
- Downloading of addresses (IP, subnet, gateway) to a device
- Downloading the PROFINET name (station name) to a device
- Placing a CPU in RUN or STOP mode
- Setting the time in a CPU to the current time of your PG/PC
- Downloading a new program to a CPU or an HMI device
- Downloading from CPU, downloading to CPU or deleting recipe data from a CPU
- Downloading from CPU or deleting data log data from a CPU

- Backup/restore of data from/to a backup file for CPUs and HMI devices
- Downloading service data from a CPU
- Reading the diagnostics buffer of a CPU
- Performing a CPU memory reset
- Resetting devices to factory settings
- Downloading a firmware update to a device

You can find the SIMATIC Automation Tool on the Internet (https://support.industry.siemens.com/cs/ww/en/view/98161300).

## PRONETA

With SIEMENS PRONETA (PROFINET network analysis), you analyze the PROFINET network during commissioning. PRONETA features two core functions:

- The topology overview independently scans PROFINET network and all connected components.
- The IO check is a fast test of the wiring and the module configuration of a system.

You can find SIEMENS PRONETA on the Internet (https://support.industry.siemens.com/cs/ww/en/view/67460624).

## SINETPLAN

SINETPLAN, the Siemens Network Planner, supports you in planning automation systems and networks based on PROFINET. The tool facilitates professional and predictive dimensioning of your PROFINET installation as early as in the planning stage. In addition, SINETPLAN supports you during network optimization and helps you to exploit network resources optimally and to plan reserves. This helps to prevent problems in commissioning or failures during productive operation even in advance of a planned operation. This increases the availability of the production plant and helps improve operational safety.

The advantages at a glance

- Network optimization thanks to port-specific calculation of the network load
- Increased production availability thanks to online scan and verification of existing systems
- Transparency before commissioning through importing and simulation of existing STEP 7 projects
- Efficiency through securing existing investments in the long term and optimal exploitation of resources

You can find SINETPLAN on the Internet (https://www.siemens.com/sinetplan).

# Product overview

# 2

## 2.1 Properties

### Article number

SIMATIC ET 200SP TM ECC 2xPWM ST 6FE1242-6TM10-0BB1

### Validity

This manual is valid as of firmware version V1.02 and function block ECC4100 V1.1.

### View of the module

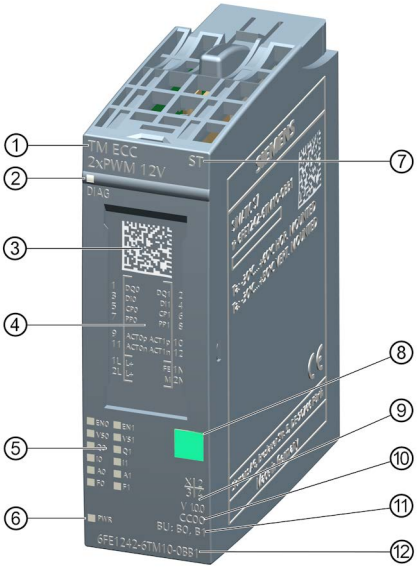


① Module type and name
② LED for diagnostics
③ 2D matrix code
④ Wiring diagram
⑤ LEDs for channel status
⑥ LED for supply voltage
⑦ Function class
⑧ Color labeling module type
⑨ Function state of the device
⑩ Color code for selecting the color identification labels
⑪ BU type
⑫ Article number

Figure 2-1 View of the SIMATIC ET 200SP TM ECC 2xPWM ST module

## Properties

The SIMATIC ET 200SP TM ECC 2xPWM ST technology module is used for control and monitoring of conductive charging of electric vehicles on the three-phase AC grid according to the standard IEC 61851-1, charging mode Mode 3. It provides two charging outlets for this purpose.

The TM ECC 2xPWM ST is intended to control the contactor that is used to establish the connection between power grid and electric vehicle.

In addition, it generates and monitors the CP signal (Control Pilot Signal) and evaluates the resistance at the PP (Plug Present or Proximity) connector.

The Control Pilot signal (CP), among other things, has the following functions:

- Evaluation of the vehicle status (vehicle connected/not connected - vehicle in different stages ready for charging - error)
- Transfer of information for maximum available charging current over a PWM signal
- Modulation of the TRIP line function (quick shutdown of exposed dangerous voltages on the charging cable)

The technology module determines the resistance at the PP terminal (resistance coding in the connector of the charging cable). This value helps determine the current carrying capacity of the charging cable and whether the connector is plugged between charging station and charging cable.

You can use the TM ECC 2xPWM ST technology module to enable or disable the electromotive or electromagnetic locking of the charging connector in the charging station depending on the status (ACT). In addition, the locking process can be controlled and monitored by means of the control and feedback interface (Page 35) externally without using the ACT outputs.

The technology module can evaluate the configured feedback information to determine whether or not the requested function was executed.

The following feedback information is available:

- Feedback contactor
- Feedback locking
- Feedback ventilation

If the required state and the achieved state do not match, a diagnostics alarm to that effect is triggered after three seconds.

You can configure a corresponding feedback contact in TIA Portal as of version V14 SP1 / "HSP0234 ET200SP ECC 2xPWM" or in the GSDML.

If you are using the technology module in "IEC61851-1 mode" and plug the charging cable into the charging station, the current carrying capacity of the charging cable is detected and connector locking is activated when the current carrying capacity of the cable is sufficient. The locking mechanism is not unlocked until the charging cable is unplugged from the vehicle. You can configure electromotive locking and its control in TIA Portal as of version V14 SP1 / "HSP0234 ET200SP ECC 2xPWM" or in the GSDML.

## Inputs and outputs

- 2x Control Pilot (CP)
- 2x Plug Present (PP)
- 2x Digital Out (DQ) as open collector
- 2x Digital In (DI)
- 2x connector for electromotive or electromagnetic connector locking (ACTp, ACTn)

| **NOTICE** |
| --- |
| You must not connect an external voltage to the PP connector, because it could destroy the internal circuitry of the connector. This also applies if the module is operated in accordance with the SAE J1772 standard. In this operating mode, you must **not** connect the PP conductor to the module. This will result in an error message.<br><br>If you have configured the technology module with "electromagnetic connector locking", the ACTn connector functions as open collector. The load (the locking electromagnets in this case) connected to this connector must be supplied by a voltage source with limited voltage and/or power rating (SELV, PELV according to EN61010-1 and EN61010-2-201, Class 2). Maximum 12 V DC / 1.3 A.<br><br>In general, you must not connect an external voltage >12 V to the ACTp and ACTn connectors. |

## System environment

Distributed operation in an S7-1500 system:

- TIA Portal as of version V14 SP1

Distributed operation in a system from a different manufacturer:

- PROFINET GSD files (https://support.industry.siemens.com/cs/document/57138621?dti=0&lc=en-US)

## Accessories

The following accessories can be used with the module and is not included in the scope of delivery:

- Labeling strips
- Color-coded labels
- Reference identification labels

A BaseUnit of the BU type B1 or BU type B0 is required to operate the technology module. You can find an overview of the BaseUnits that are compatible with the technology module in the Product information for documentation of the ET 200SP Distributed I/O System (https://support.industry.siemens.com/cs/document/73021864?dti=0&lc=en-US).

You will find additional information on installation in the ET 200SP distributed I/O system System Manual (https://support.industry.siemens.com/cs/document/58649293?dti=0&lc=en-US).

## Disposal



Electric and electronic devices do not belong in household waste. Dispose of the product according to the valid legal regulations at the end of its service life. By doing so you will meet the legal obligations and help protect the environment. WEEE Reg. No. DE 23691322

## Configuration example

The charging controller described here is a technology module for SIMATIC ET 200SP. Solutions for S7-1500 CPUs are possible. TIA Portal can be used as the configuration software.

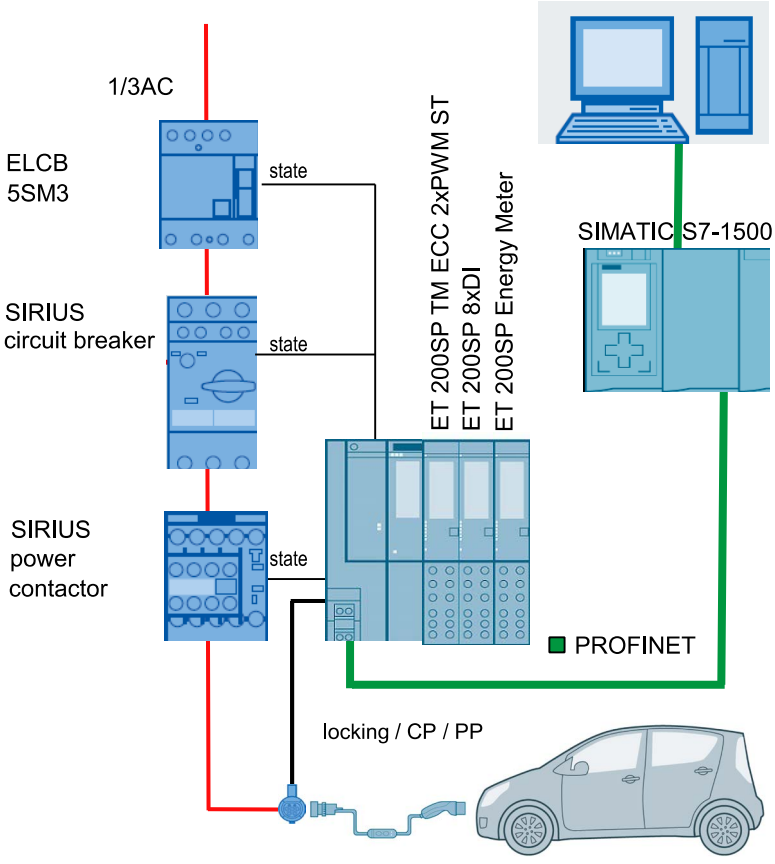


Figure 2-2 Configuration example with one charging outlet

## Firmware update

**Note**

**Firmware update**

Note that a firmware update can only be performed in STOP mode. When you trigger the update in TIA Portal, you must switch the CPU to STOP manually. No dialog prompting you to do so appears in this case. If the CPU is not switched to STOP, the update is not executed and the progress bar remains at "0%".

# Wiring

# 3

## 3.1 Terminal assignment and power supply

A BaseUnit of the BU type B1 or BU type B0 must be used for the SIMATIC ET 200SP TM ECC 2xPWM ST.

Connect all required inputs and outputs (DI, DQ, CP, PP, ACT) - and in the case of a BaseUnit BU type B1 also an external 24 V DC voltage source - to the BaseUnit of the technology module.

| NOTICE |
| --- |
| **The two charging outlets are not galvanically isolated from each other.**<br>All external connectors of the BaseUnit are referenced to the same ground potential. For the charging equipment to function without problems, you need a ground rod at the charging station as reference for this ground potential.<br>Galvanic isolation exists to the system bus of the ET 200SP. |

**Note**

Ensure a low resistance connection of the standard mounting rail to the ground potential (FE). Design according to VDE 0100-600.

You must also regularly check the functioning of the functional ground connection during the proof tests that are performed for the charging equipment.

### BaseUnit

The BaseUnit is not included in the scope of delivery of the SIMATIC ET 200SP TM ECC 2xPWM ST technology module. It must be ordered separately.

You can find an overview of the BaseUnits that are compatible with the technology module in the Product information for documentation of the ET 200SP Distributed I/O System (http://support.automation.siemens.com/WW/view/en/73021864).

Information regarding selection of a suitable BaseUnit can be found in the ET 200SP Distributed I/O System System Manual (http://support.automation.siemens.com/WW/view/en/58649293) and in the ET 200SP BaseUnits Manual (http://support.automation.siemens.com/WW/view/en/58532597/133300).

## Pin assignment of the BaseUnit BU type B1

The table shows the pin assignment of the BaseUnit BU20-P12+A0+4B (6ES7193-6BP20-0BB1). The power supply of this BaseUnit is not looped through, which means downstream BaseUnits are not supplied by this BaseUnit. The same downstream BU requires its own power supply. This means the BaseUnit is its own potential group.

The BaseUnit BU type B1 must be supplied with safety extra-low voltage (SELV) or protective extra-low voltage (PELV).

All 24 V nominal power supplies of the I/O circuits must only be powered by approved sources that fulfill the requirements according to EN61010-2-201 for SELV, PELV, Class 2, voltage limited and/or power limited sources.

| Designation | I/O name | | View | I/O name | | Designation |
|---|---|---|---|---|---|---|
| Contactor switching contact | DQ0 | 1 | 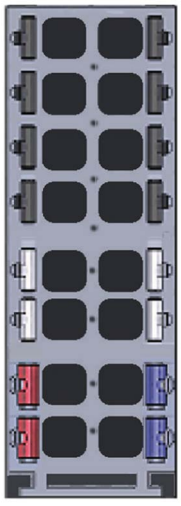 | 2 | DQ1 | Contactor switching contact |
| Read-back contact contactor / connector locking | DI0 | 3 | | 4 | DI1 | Read-back contact contactor / connector locking |
| Control Pilot | CP0 | 5 | | 6 | CP1 | Control Pilot |
| Plug Present signal | PP0 | 7 | | 8 | PP2 | Plug Present signal |
| Actuator locking control, p-connection | ACT0p | 9 | | 10 | ACT1p | Actuator locking control, p-connection |
| Actuator locking control, n-connection | ACT0n | 11 | | 12 | ACT1n | Actuator locking control, n-connection |
| External 24 V DC supply input<br>Pins 13 and 15 are connected internally. | L+ | 13 | | 14 | FE | FE and ground for supply voltage<br>Pins 14 and 16 are connected internally. |
| | | 15 | | 16 | M | |

## Pin assignment of the BaseUnit BU type B0

To connect to or use an existing potential group, you must use the following BaseUnit.

A new potential group is not created with the BaseUnit BU type B0 (BU20-P12+A4+0B / 6ES7193-6BP20-0BB0). It continues the potential group. The self-establishing voltage busbars P1, P2 and the AUX rail are looped through to the neighboring module (BaseUnit) on the left.

All 24 V nominal power supplies of the I/O circuits must only be powered by approved sources that fulfill the requirements according to EN61010-2-201 for SELV, PELV, Class 2, voltage limited and/or power limited sources.

| Designation | I/O name | | View | I/O name | | Designation |
|---|---|---|---|---|---|---|
| Contactor switching contact | DQ0 | 1 | 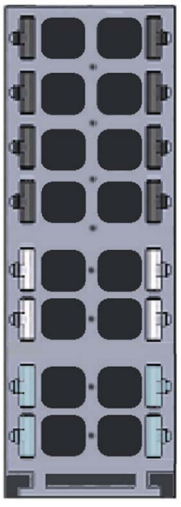 | 2 | DQ1 | Contactor switching contact |
| Read-back contact contactor / connector locking | DI0 | 3 | | 4 | DI1 | Read-back contact contactor / connector locking |
| Control Pilot | CP0 | 5 | | 6 | CP1 | Control Pilot |
| Plug Present signal | PP0 | 7 | | 8 | PP1 | Plug Present signal |
| Actuator locking control, p-connection | ACT1p | 9 | | 10 | ACT1p | Actuator locking control, p-connection |
| Actuator locking control, n-connection | ACT0n | 11 | | 12 | ACT1n | Actuator locking control, n-connection |
| | AUX | 13 | | 14 | AUX | |
| | | 15 | | 16 | | |

## Contactor switching contact DQ0 and DQ1

- There is no galvanic isolation between the digital outputs from each other or from the digital inputs. However, galvanic isolation exists between the digital outputs and the ET 200SP system bus.
- The digital outputs are protected against overload and short-circuit.
- For their own protection, the digital outputs are equipped with protective diodes.

**Note**

Connect an external protection element to the relays or contactors to suppress self-inductance when switching off inductive loads.

We recommend using contactors with integrated protection elements.

You must supply the contactors with a voltage source with limited voltage and/or power rating (SELV, PELV according to EN61010-1 and EN61010-2-201, Class 2).

## Read-back input for the contactor or the connector locking DI0 and DI1

Galvanic isolation does not exist between the digital inputs nor between the digital inputs and the digital outputs. Galvanic isolation does, however, exist between the digital inputs and the ET 200SP system bus.

You can configure these inputs in 24 V or 12 V logic. In the 24 V configuration, the low level is defined from 0 V to 5 V and the high level from 11 V to 24 V. In the 12 V configuration, the low level is defined from 0 V to 2.5 V and the high level from 5.5 V to 12 V.

You can configure the read-back input via TIA Portal.

## Control Pilot CP0 and CP1

The SIMATIC ET 200SP TM ECC 2xPWM ST technology module can operate two conductive charging outlets in accordance with the standard IEC61851-1. The device forms a Control Pilot signal for every charging outlet. This signal is a square signal with 1 kHz frequency and an amplitude of +/-12 V. The duty ratio of the Control Pilot signal indicates the current which the charging station can deliver as charging current:

Table 3- 1 Control Pilot (PWM)

| **Control Pilot (PWM)** | **Meaning / available charging current** |
|---|---|
| < 8% | Charging not permitted |
| ≥ 8% .. < 10% | 6 A |
| ≥ 10% .. < 85% | available current = PWM [%] × 0.6 A/%<br>Example: PWM = 50% → 50% × 0.6 A/% = 30 A |
| ≥ 85% .. < 96% | available current = (PWM [%] - 64) × 2.5 A/% |
| ≥ 96% .. ≤ 97% | 80 A |
| > 97% | Charging not permitted |

This module does not support power-line communication.

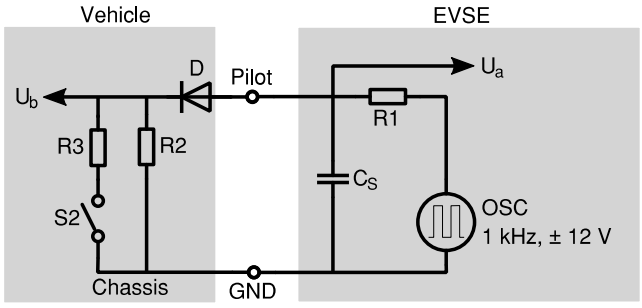


| | |
|---|---|
| EVSE | Charging station |
| Vehicle | Vehicle |
| Chassis | Chassis |
| R1 | 1000 Ω ± 3% |
| R2 | 2740 Ω ± 3% |
| R3 | 1300 Ω ± 3% (state C) or 270 Ω ± 3 % (state D) |
| $C_S$ | 300 pF |
| $U_a$ | Voltage measurement of the station |
| $U_b$ | Voltage measurement (level, frequency, duty cycle) of the vehicle |

Figure 3-1 Typical pilot circuit

The vehicle shows its state via the connection of corresponding resistances. To determine the vehicle status, the positive component of the PWM signal is recorded as a peak value ($U_a$) and read in:

Table 3- 2 States and level $U_a$

| State | Vehicle connected | S2 | Charging is possible | $U_a$ [a] | Comment |
|---|---|---|---|---|---|
| A | No | Open | No | 12 V | $U_b$ = 0 V |
| B | Yes | Open | No | 9 V [b] | R2 determined |
| C | Yes | Closed | Vehicle ready | 6 V [c] | R3 = 1.3 kΩ ± 3%<br>Ventilation not required |
| D | | | | 3 V [c] | R3 = 270 Ω ± 3%<br>Ventilation of charging area required |
| E | Yes | Open | No | 0 V | $U_b$ = 0 V:<br>EVSE, grid problem or grid not available, pilot conductor short circuit to earth, etc. |
| F | Yes | Open | No | -12 V | EVSE not available |

a) All voltages are measured after the stabilization phase, tolerance ±1 V.

b) The generator of the ESVE can use a stable direct voltage or a ±12 V square wave signal during this phase.

c) The measured voltage is a function of the R3 value.

## Plug Present signal PP0 and PP1

The technology module determines for every charging outlet the current carrying capacity of the connected charging cable via the Plug Present interface (also referred to as the Proximity interface). Also note the adjustable parameters (Page 34)

Table 3- 3 Coding of the permitted current in the charging cable or charging connector

| **Resistance $R_C$** | **1.5 kΩ, 0.5 W, ± 3%** | **680 Ω, 0.5 W, ± 3%** | **220 Ω, 0.5 W, ± 3%** | **100 Ω, 0.5 W, ± 3%** |
|---|---|---|---|---|
| Current carrying capacity | 13 A | 20 A | 32 A | 63 A |

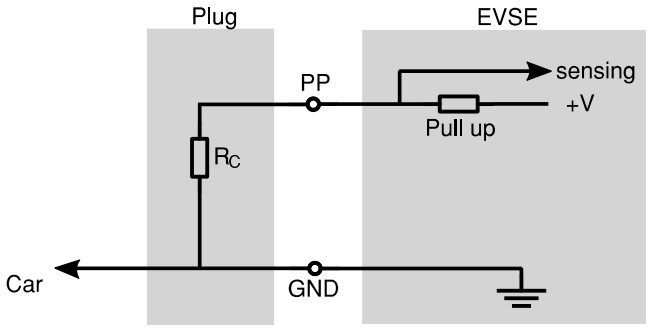


Pull up 330 Ω

Figure 3-2 Plug Present circuit

The technology module assigns a current carrying capacity to the resistance value measured at the PP terminal ($R_C$) according to the following table.

Table 3- 4 Permitted current in the charging cable or charging connector

| **Resistance $R_C$** | **1000 .. 2200 Ω** | **330 .. < 1000 Ω** | **150 .. < 330 Ω** | **75 .. < 150 Ω** |
|---|---|---|---|---|
| Current carrying capacity | 13 A | 20 A | 32 A | 63 A |

Measured values for $R_C$ outside of the values define here will result in an error. A charging operation cannot be started. The permissible current in the charging cable is set to 0 A in this case.

**Note**

If the SAE J1772 standard has been selected, the PP resistance is not evaluated!

Do not connect any potential PP conductor of the charging cable to the PP terminal!

The maximum charging current is only limited here by the configuration of the module in TIA.

**Note**

As of firmware version 1.03, the PP resistance is determined in the states A to D.

Measurement in state A recognizes when the charging cable is still connected to the charging station but has already been disconnected from the vehicle.

Up to firmware version 1.02, the resistance was only measured in states B to D. In state A (charging cable is not connected to the vehicle), the permissible current in the charging cable is set to 0 A.

## Connector locking ACT0p/n and ACT1p/n

The technology module enables you to use either electromotive or electromagnetic connector locking and to monitor it over the associated read-back input (DI) of the charging outlet.

- Locking: The connector of the charging cable is locked in the charging station after the vehicle has changed to STATE B (vehicle connected) and the Plug Present evaluation has determined a sufficient current carrying capacity of the cable.
- Unlocking: The locking mechanism is not unlocked until the charging cable is unplugged from the vehicle.

When you configure **electromotive locking**, you must connect the actuator (manufacturer-specific locking module for control of the actuator) with correct polarity to ACTp (positive terminal) or ACTn (negative terminal) for locking. The technology module changes the polarity of these connections when the direction of actuation is changed.

- Unlocked: ACTp = 12 V; ACTn = 0 V; max. current 10 mA
- Locked: ACTp = 0 V; ACTn = 12 V; max. current 10 mA

The tolerance of the 12 V voltage between ACTp and ACTn is ± 6%.

As of firmware version 1.0.4, the outputs ACT0p/n and ACT1p/n can be controlled directly via the process image PIQ (see section Assignment of the control interface (Page 35)), if the "Interlock" parameter in the HSP or the GSDML file is set to "No interlock" or "External (via PII)" (see table Adjustable parameters and their default settings (Page 34)).

These outputs can also be controlled by the FC4100 function if FW version 1.0.4 is installed and TIA Library version 1.2 or higher is used.

Furthermore, as of firmware version 1.0.4, an unlocking process is perform as soon as the "Enable" input in the FC4100 function changes from True to False and the "Interlock" parameter in the HSP or the GSDML file is set to "Polarity reversal pulse 800 s" (see table Adjustable parameters and their default settings (Page 34)). In this case an unlocking also takes place via direct control of the process image of the outputs (PAE) according to the description in the section Assignment of the control interface (Page 35).

**Note**

When the selected electromotive connector locking consumes a current greater than 10 mA, you must install a suitable interlock module (actuator) in between.

Note that due to the potentially high motor blocking currents, repeated interlock or unlock pulses in quick succession can lead to an increased load (theoretically up to overheating) on the interlock/unlock motor.

Comment: If you use an actuator with reverse logic, you must wire the connectors accordingly.

In case of **electromagnetic connector locking** (e.g. by means of a solenoid), the ACTn connectors work as an open collector. This means you must connect the actuating magnet involved in the locking process to a suitable power supply (12 V, SELV/PELV) and connect the negative connector of the actuating magnet to the ACTn of the respective charging outlet. See Block diagram (Page 30). The maximum permitted current is 1.3 A in this case.

## External L+ power supply (only for BaseUnit type B1)

Connect an external 24 V DC power supply of the type SELV/PELV (according to EN61010-2-201, Class 2) to the L+ and M connectors to supply the SIMATIC ET 200SP TM ECC 2xPWM ST technology module with voltage. The voltage input of the technology module has an electrical reverse polarity protection.

The technology module monitors *its* supply voltage.

**Note**

**L+- and M isolation on the SIMATIC ET 200SP TM ECC 2xPWM ST technology module provided by the BaseUnit type B1.**

The L+ and M connectors on the BaseUnit of type B1 are galvanically isolated from the neighboring BaseUnits to the left and right. The L+ and M busbars run through the BaseUnit type B1 (without connectors) and expand the busbar with connectors for BaseUnits on the left and right.

# 3.2 Connection examples

## Block diagrams

The circuit diagrams below show the schematic wiring of the technology module with the typical options for use of the feedback input.

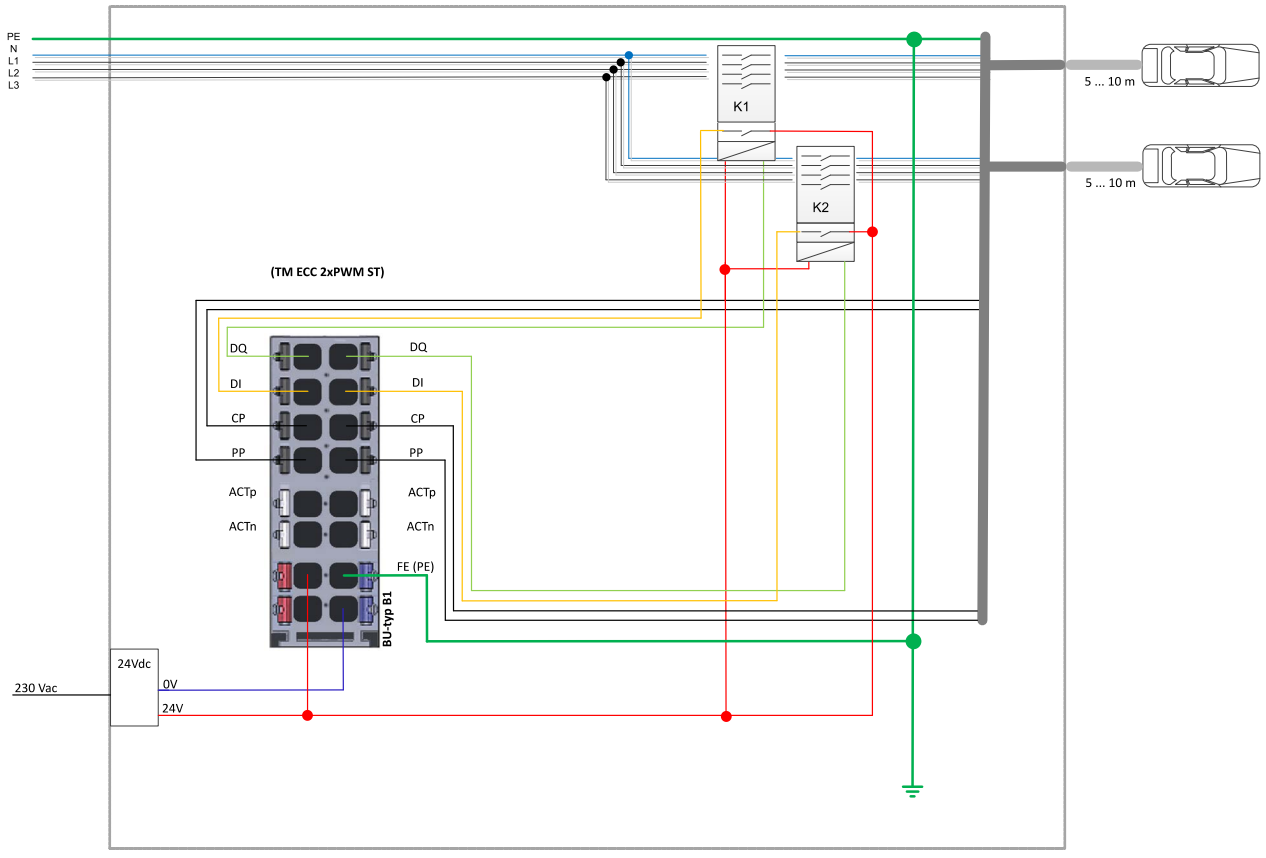


Figure 3-3 Connecting the technology module with feedback from contactor status (when using a BU type B1)

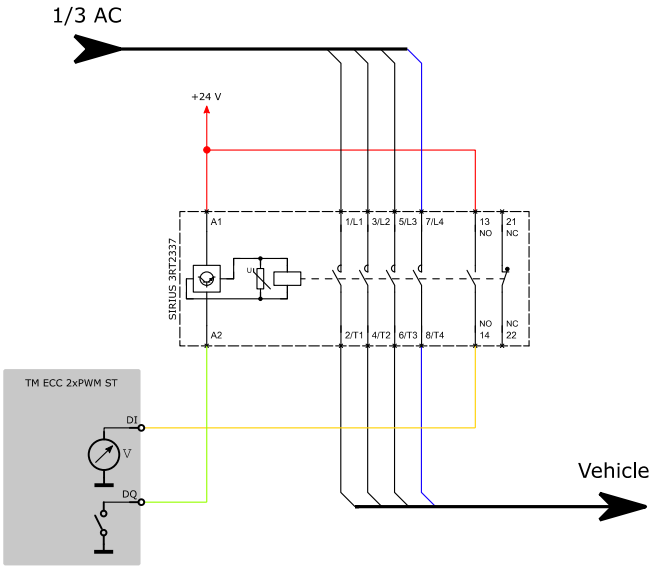


Figure 3-4 Detail view contactor circuit

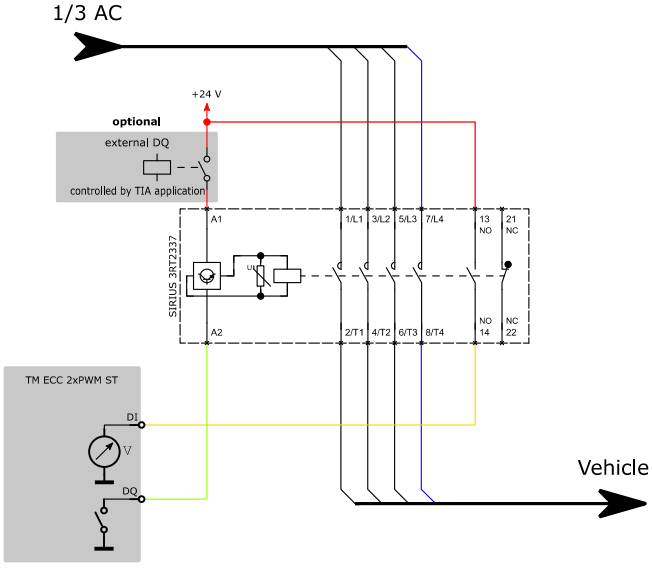


Figure 3-5 Detail view of protective wiring with optional DQ in the supply line

**Note**

**We recommend supplying the output contactor via an additional standard DQ**

To ensure the best possible protection during shutdown of the charging system, we recommend supplying the output contactor via a standard DQ (see above).

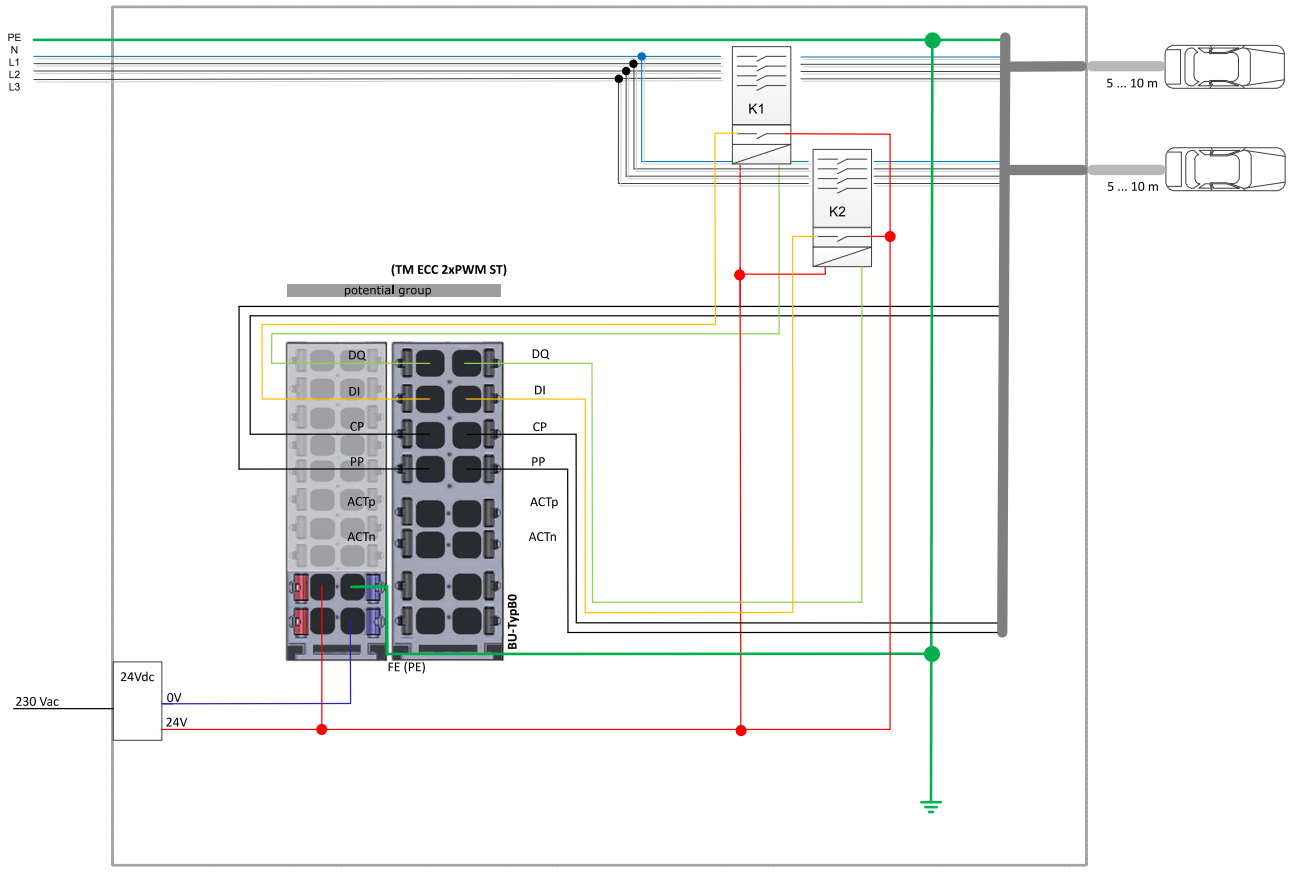


Figure 3-6 Connecting the technology module with feedback from contactor status (when using a BU type B0)

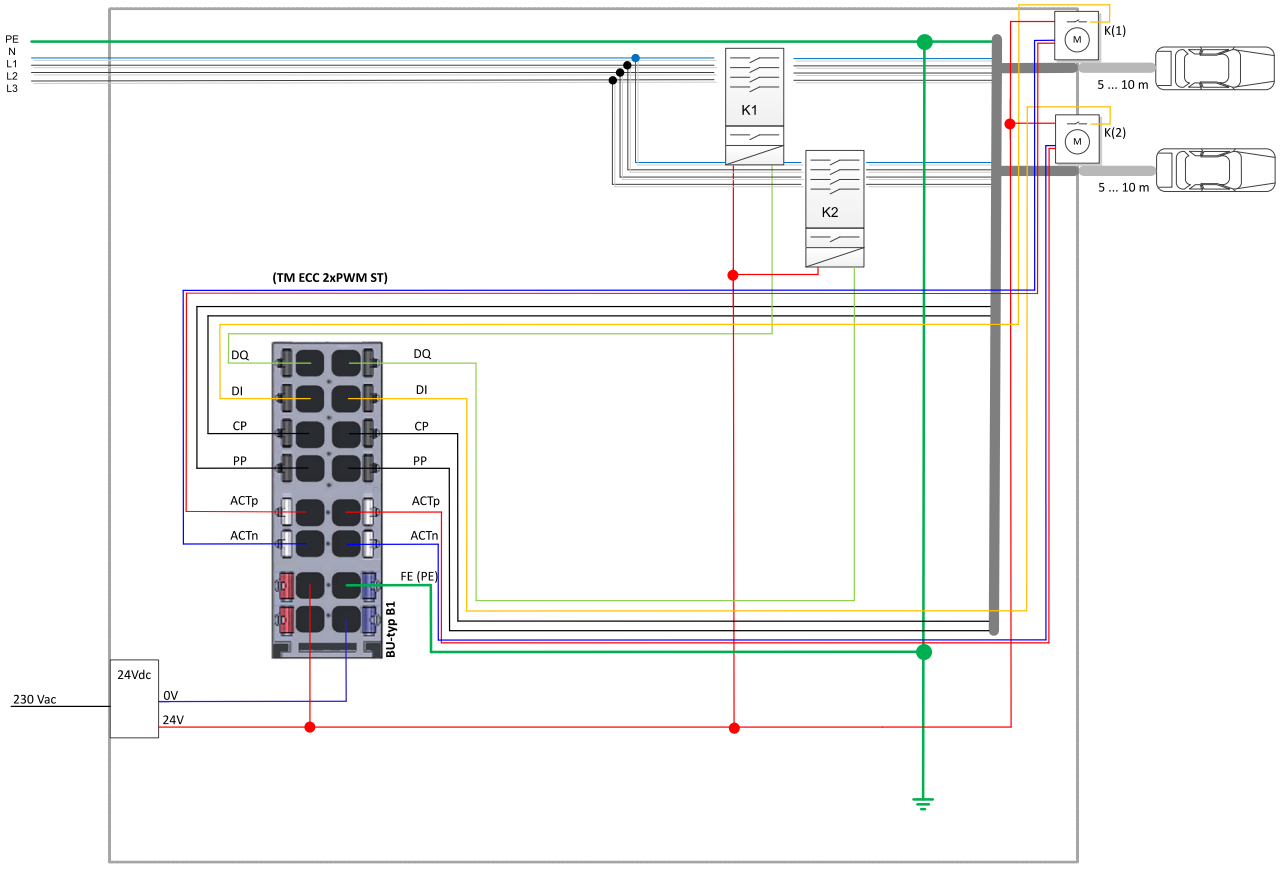


Figure 3-7 Connecting the technology module with electromotive connector locking and its feedback

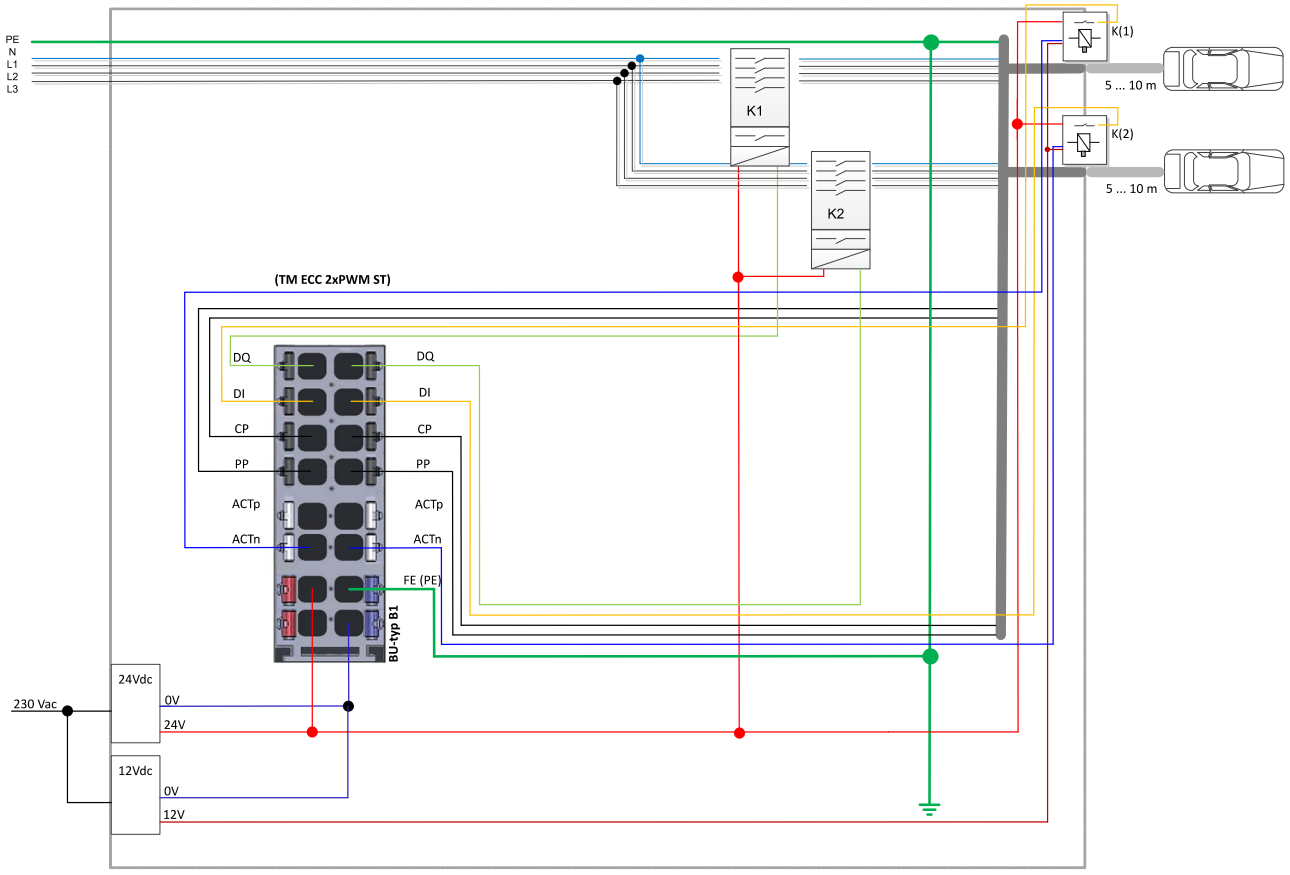


Figure 3-8 Connecting the technology module with electromagnetic connector locking (in the example via ACTn) and its feedback.

# Configuring/address space

# 4

## 4.1 Configuring

### Introduction

You can configure and parameterize the technology module SIMATIC ET 200SP TM ECC 2xPWM ST with configuration software. The functions of the technology module are controlled and monitored by the user program.

### System environment

You can use the technology module in the following system environments:

Table 4- 1 Possible applications of the technology module with PROFINET I/O

| Applications | Required components | Configuration software | In your program |
|---|---|---|---|
| Distributed operation in an S7-1500 system | • S7-1500 Automation system<br>• ET 200SP Distributed I/O System<br>• SIMATIC ET 200SP TM ECC 2xPWM ST technology module | STEP 7 (TIA Portal):<br>Device configuration and parameter settings with the hardware configuration (HWCN) | Direct access to the control and feedback interface (Page 35) of the SIMATIC ET 200SP TM ECC 2xPWM ST technology module in the I/O data |
| Centralized or distributed operation in an ET 200SP system | • ET 200SP automation system<br>• SIMATIC ET 200SP TM ECC 2xPWM ST technology module | STEP 7 (TIA Portal):<br>Device configuration and parameter settings with the hardware configuration (HWCN) | Direct access to the control and feedback interface of the SIMATIC ET 200SP TM ECC 2xPWM ST technology module in the I/O data |
| Distributed operation in a PROFINET controller | PROFINET controller<br>• ET 200SP Distributed I/O System<br>• SIMATIC ET 200SP TM ECC 2xPWM ST technology module | Engineering system with GSDML file | Direct access to the control and feedback interface of the SIMATIC ET 200SP TM ECC 2xPWM ST technology module in the I/O data |

### Hardware Support Package (HSP)

If you cannot find the SIMATIC ET 200SP TM ECC 2xPWM ST technology module in the hardware catalog of the TIA Portal, you must install the corresponding HSP file (HSP0234 ET200SP ECC 2xPWM).

The Hardware Support Package (HSP) is available as download (http://support.automation.siemens.com/WW/view/en/72341852) on the Internet.

### GSD file

The respective GSD file for the ET200SP Distributed I/O System can be downloaded from the Internet:

- GSD file PROFINET IO
  (http://support.automation.siemens.com/WW/view/en/57138621)
- GSD file PROFIBUS DP
  PROFIBUS DP is not supported.

## 4.2 Reaction to CPU STOP

In the case of a CPU STOP, an active charging process is aborted after three seconds. This means the PWM signal on the CP connection switches to "-12 V" (EVSE status not available). The associated contactor (DQx output) and the corresponding ACTx output are disabled. In this case, the lock is automatically unlocked (even if the "LockActive" bit is set).

Breakdowns in communication, such as an interruption of the PROFINET connection, are treated as CPU STOPs.

## 4.3 Required I/O address space

### Address space of the technology module

Table 4- 2 Range of the I/O addresses of the SIMATIC ET 200SP TM ECC 2xPWM ST technology module

| | Inputs | Outputs |
|---|---|---|
| Range | 16 bytes | 8 bytes |

### Further information

You can find a description of the control and feedback interface of the SIMATIC ET 200SP TM ECC 2xPWM ST technology module in the section Control and feedback interface (Page 35).

# 4.4 Parameter

## Parameter

You specify the properties of the technology module using various parameters. These can be assigned by using the HSP or the GSDML file. Depending on the settings, not all parameters are available. You cannot change the parameter assignment in the user program.

You have the following options for setting the parameters of the module:

Table 4- 3 Parameter assignment options

| **Parameter settings using the ...** | **Basic procedure** |
|---|---|
| Hardware configuration in STEP 7 with HSP file | 1. Install the respective HSP file.<br>The module is subsequently available in the hardware catalog under "ET 200SP".<br>2. Set the device configuration and the parameters in the hardware configuration.<br>3. Download the parameter assignment to the module. |
| Hardware configuration with GSD file for distributed operation on PROFINET IO | 1. Install the latest PROFINET GSD file.<br>The module is subsequently available in the hardware catalog under "Additional field devices".<br>2. Set the parameters of the PROFINET GSD file in the hardware configuration.<br>3. Download the parameter assignment to the module. |

## Adjustable parameters

Table 4- 4 Configurable parameters and their defaults

| Parameter | Value range | Default setting | Configuration in RUN |
|---|---|---|---|
| ECC standard [a] (**EC**ar **C**harging) | • IEC 61851-1<br>• SAE J1772 | IEC 61851-1 | No |
| Charging outlet active | • Yes<br>• No | Yes | No |
| Integrated charging cable | • Yes<br>• No | No | No |
| Cable locking | • No locking<br>• External (via PII)<br>• Pole reversal pulse 800 ms<br>• Polarity reversal permanent<br>• Open collector | Pole reversal pulse 800 ms | No |
| Cable locking feedback [b] | • No feedback<br>• Internal module DI<br>• External (via PIQ) | Internal module DI | No |
| Contactor feedback [b] | • No feedback<br>• Internal module DI<br>• External (via PIQ) | External (via PIQ) | No |
| Maximum charging current [A] | 6 .. 80 | 13 | No |
| DI input voltage | • 12 V input [c]<br>• 24 V input [d] | 24 V input | No |

[a] If "SAE J1772" is selected in the hardware configuration, the parameter "Integrated charging cable" is automatically set to "Yes". Electromotive locking is not possible in this case.
Any PP resistor possibly plugged in is not evaluated! The maximum charging current is limited here by the configuration of the module in TIA and by the "Maximum permissible charging current" parameter or, when using the FC4100, by the "MaxCurr" parameter.
**Any potential PP conductor of the charging cable must not be connected to the PP terminal, otherwise an error is output.**

[b] Note that both feedbacks cannot be set to the internal module DI at the same time.

[c] Low level: 0 ..2.5 V; High level: 5.5 .. 12 V

[d] Low level: 0 ..5 V; High level: 11 .. 24 V

# 4.5 Control and feedback interface

## 4.5.1 Assignment of the control interface

The user program uses the control interface to manipulate the behavior of the technology module.

### Control interface

Table 4- 5 Assignment of the control interface

| Charging outlet | Byte | Bit | Default | Min | Max | Meaning |
|---|---|---|---|---|---|---|
| 0 | 0 | 0 | 0 | 0 | 1 | Charging outlet enable<br>0 = inactive; 1 = active<br>Expanded as of FW version 1.0.4:<br>Execution of an unlocking process at edge transition "1 → 0", if the "Interlock" parameter in the HSP or the GSDML file is set to "Polarity reversal pulse 800 s" (see table Adjustable parameters and their default settings (Page 34)) |
| | | 1 | 0 | 0 | 1 | PWM enable<br>0 = Charging blocked; 1 = Charging enabled |
| | | 2 | 0 | 0 | 0 | System reserve |
| | | 3 | 0 | 0 | 1 | Feedback ventilation<br>0 = disabled; 1 = enabled |
| | | 4 - 6 | 0 | 0 | 0 | System reserve |
| | | 7 | 0 | 0 | 1 | PIQ valid<br>must always be set to "1" by the TIA application to signal "valid values" to the TM ECC 2xPWM ST. [a)] |
| | 1 | 0 | 0 | 0 | 1 | Feedback locking<br>0 = unlocked; 1 = locked<br>(is used for the "Locking feedback" parameter and the setting "External via PIQ") |
| | | 1 | 0 | 0 | 1 | Contactor feedback<br>0 = disabled; 1 = enabled<br>(is used for the "Contactor feedback" parameter and the setting "External via PIQ") |
| | | 2 | 0 | 0 | 1 | Switch off contactor actively<br>0 = no; 1 = yes<br>If the bit is set to "1", a pending charging process is terminated and the contactor is switched off after four seconds. |
| | | 3 | 0 | 0 | 1 | Cable lock disable active [b)]<br>0 = no; 1 = yes<br>The charging plug is not unlocked on the charging station side as long as the cable lock disable is active (even if the charging plug has been removed on the vehicle side). |
| | | 4 | 0 | 0 | 0 | System reserve |

| Charging outlet | Byte | Bit | Default | Min | Max | Meaning |
|---|---|---|---|---|---|---|
| | | 5 | 0 | 0 | 1 | Expanded as of FW version 1.0.4 (otherwise reserved)<br>ACT outputs<br>0 = ACT outputs ACT0p and ACT0n high resistance<br>1 = ACT outputs corresponding to bit 6 and bit 7, provided that the "Interlock" parameter in the HSP or GSDML file is set to "No interlock" or "External (via PII)" (see table Adjustable parameters and their default settings (Page 34)) |
| | | 6 | 0 | 0 | 1 | Expanded as of FW version 1.0.4 (otherwise reserved)<br>Voltage at ACT output ACT0p<br>0 = Output voltage 0V<br>1 = Output voltage 12V |
| | | 7 | 0 | 0 | 1 | Expanded as of FW version 1.0.4 (otherwise reserved)<br>Voltage at ACT output ACT0n<br>0 = Output voltage 0V<br>1 = Output voltage 12V |
| | 2 - 3 | - | 0 | 0 | $2^{16}$-1 | Maximum permitted charging current [in 0.01 A] (example: Value "100" corresponds to 1.00 A)<br>(minimum of the three values "FC input MaxCurr", "Current carrying capacity of the cable" and the parameter "Maximum charging current")<br>If the specified charging current is less than 6 A, the PWM signal is disabled. |
| 1 | 4 | 0 | 0 | 0 | 1 | Charging outlet enable<br>0 = inactive; 1 = active<br>Expanded as of FW version 1.0.4:<br>Execution of an unlocking process at edge transition "1 → 0", if the "Interlock" parameter in the HSP or the GSDML file is set to "Polarity reversal pulse 800 s" (see table Adjustable parameters and their default settings (Page 34)) |
| | | 1 | 0 | 0 | 1 | PWM enable<br>0 = Charging blocked; 1 = Charging enabled |
| | | 2 | 0 | 0 | 0 | System reserve |
| | | 3 | 0 | 0 | 1 | Feedback ventilation<br>0 = disabled; 1 = enabled |
| | | 4 - 6 | 0 | 0 | 0 | System reserve |
| | | 7 | 0 | 0 | 1 | PIQ valid<br>must always be set to "1" by the TIA application to signal "valid values" to the TM ECC 2xPWM ST. [a)] |
| | 5 | 0 | 0 | 0 | 1 | Feedback locking<br>0 = unlocked; 1 = locked<br>(is used for the "Locking feedback" parameter and the setting "External via PIQ") |
| | | 1 | 0 | 0 | 1 | Contactor feedback<br>0 = disabled; 1 = enabled<br>(is used for the "Contactor feedback" parameter and the setting "External via PIQ") |

| Charging outlet | Byte | Bit | Default | Min | Max | Meaning |
|---|---|---|---|---|---|---|
| | | 2 | 0 | 0 | 1 | Switch off contactor actively<br>0 = no; 1 = yes<br>If the bit is set to "1", a pending charging process is terminated and the contactor is switched off after four seconds. |
| | | 3 | 0 | 0 | 1 | Cable lock disable active [b]<br>0 = no; 1 = yes<br>The charging plug is not unlocked on the charging station side as long as the cable lock disable is active (even if the charging plug has been removed on the vehicle side). |
| | | 4 | 0 | 0 | 0 | System reserve |
| | | 5 | 0 | 0 | 1 | Expanded as of FW version 1.0.4 (otherwise reserved)<br>ACT outputs<br>0 = ACT outputs ACT0p and ACT0n high resistance<br>1 = ACT outputs corresponding to bit 6 and bit 7, provided that the "Interlock" parameter in the HSP or GSDML file is set to "No interlock" or "External (via PII)" (see table Adjustable parameters and their default settings (Page 34)) |
| | | 6 | 0 | 0 | 1 | Expanded as of FW version 1.0.4 (otherwise reserved)<br>Voltage at ACT output ACT0p<br>0 = Output voltage 0V<br>1 = Output voltage 12V |
| | | 7 | 0 | 0 | 1 | Expanded as of FW version 1.0.4 (otherwise reserved)<br>Voltage at ACT output ACT0n<br>0 = Output voltage 0V<br>1 = Output voltage 12V |
| | 6 - 7 | - | 0 | 0 | $2^{16}$-1 | Maximum permitted charging current [in 0.01 A] (example: Value "100" corresponds to 1.00 A)<br>(minimum of the three values "FC input MaxCurr", "Current carrying capacity of the cable" and the parameter "Maximum charging current")<br>If the specified charging current is less than 6 A, the PWM signal is disabled. |

[a] If the "PIQ valid bit" is not set, the technology module reacts as with a communication fault; consequently, the associated EN-LED flashes with 2 Hz.

[b] The "Charging cable lock disable active bit" must be set to "0" beforehand (before plugging in the charging cable) and after completion of the charging process. This also applies if the cable lock via the HSP is disabled!

## 4.5.2 Assignment of the feedback Interface

The user program receives the current values and status information from the technology module over the feedback interface.

### Feedback interface

Table 4- 6 Assignment of the feedback Interface

| Charging outlet | Byte | Bit | Default | Min | Max | Meaning |
|---|---|---|---|---|---|---|
| 0 | 0 | 0 - 2 | 0 | 0 | 7 | ECC State [a)]<br>0: Charging outlet inactive<br>1: State "A" (no vehicle connected)<br>2: State "B" (vehicle connected)<br>3: State "C" (vehicle can be charged; ventilation not required)<br>4: State "D" (vehicle can be charged; ventilation required)<br>5: State "E" (CP conductor short circuit to earth)<br>6: State "F" (charging station not available)<br>7: Reserved |
| | | 3 - 6 | 0 | 0 | 0 | System reserve |
| | | 7 | 0 | 0 | 1 | PII -Valid<br>is set to 1 by the TM ECC 2xPWM ST |
| | 1 | 0 | 0 | 0 | 1 | Status of locking requirements<br>0: Unlocking requested<br>1: Interlock requested<br>(can be used in a TIA application, for example, when the control of the interlock is realized outside the module) |
| | | 1 | 0 | 0 | 1 | Status of contactor control<br>0: Disable requested<br>1: Enable requested |
| | | 2 | 0 | 0 | 1 | Status of feedback input DI<br>0: DI = 0<br>1: DI = 1 |
| | | 3 | 0 | 0 | 1 | Validity DI<br>0: DI value invalid<br>1: DI value valid |
| | | 4 | 0 | 0 | 1 | Status of ventilation<br>0: No ventilation required<br>1: Ventilation required |
| | | 5 | 0 | 0 | 1 | Status of PWM<br>0: disabled<br>1: enabled |
| | | 6 - 7 | 0 | 0 | 0 | System reserve |
| | 2 - 3 | | | | | Diagnostics |
| | 2 | 0 | 0 | 0 | 1 | CP signal level impermissible [b)] |
| | | 1 | 0 | 0 | 0 | System reserve |
| | | 2 | 0 | 0 | 1 | Resistance at PP terminal too low [b), d)] |

| Charging outlet | Byte | Bit | Default | Min | Max | Meaning |
|---|---|---|---|---|---|---|
| | | 3 | 0 | 0 | 1 | Resistance at PP terminal too high [b] |
| | | 4 | 0 | 0 | 1 | Incorrect feedback for locking [b] |
| | | 5 | 0 | 0 | 1 | Incorrect feedback for unlocking [b] |
| | | 6 | 0 | 0 | 1 | Incorrect feedback for contactor ON [b] |
| | | 7 | 0 | 0 | 1 | Incorrect feedback for contactor OFF [b] |
| | 3 | 0 | 0 | 0 | 1 | No ventilation despite requirement [b] |
| | | 1 | 0 | 0 | 1 | Overload ACT |
| | | 2 | 0 | 0 | 1 | Vandalism diagnostics [c] |
| | | 3 - 4 | 0 | 0 | 0 | System reserve |
| | | 5 | 0 | 0 | 0 | System reserve |
| | | 6 | 0 | 0 | 0 | System reserve |
| | | 7 | 0 | 0 | 1 | Internal error [c] |
| | 4 | - | 0 | -127 | 128 | Voltage level CP [in 0.1 V]<br>EXAMPLE: 90 = 9.0 V; -120 = -12.0 V |
| | 5 | - | 0 | 0 | 255 | Current carrying capacity of charging cable [in A] [e] |
| | 6 - 7 | - | 0 | 0 | $2^{16}$-1 | Charging current signaled to vehicle using PWM [in 0.01 A]<br>EXAMPLE: 1300 = 13 A |
| 1 | 8 | 0 - 2 | 0 | 0 | 7 | ECC State [a]<br>0: Charging outlet inactive<br>1: State "A" (no vehicle connected)<br>2: State "B" (vehicle connected)<br>3: State "C" (vehicle can be charged; ventilation not required)<br>4: State "D" (vehicle can be charged; ventilation required)<br>5: State "E" (CP conductor short circuit to earth)<br>6: State "F" (charging station not available)<br>7: Reserved |
| | | 3 - 6 | 0 | 0 | 0 | System reserve |
| | | 7 | 0 | 0 | 1 | PII -Valid<br>is set to 1 by the TM ECC 2xPWM ST |
| | 9 | 0 | 0 | 0 | 1 | Status of locking requirements<br>0: Unlocking requested<br>1: Locking requested<br>(can be used in a TIA application, for example, when the locking control is realized outside the module) |
| | | 1 | 0 | 0 | 1 | Status of contactor control<br>0: Disable requested<br>1: Enable requested |
| | | 2 | 0 | 0 | 1 | Status of feedback input DI<br>0: DI = 0<br>1: DI = 1 |
| | | 3 | 0 | 0 | 1 | Validity DI<br>0: DI value invalid<br>1: DI value valid |

| Charging outlet | Byte | Bit | Default | Min | Max | Meaning |
|---|---|---|---|---|---|---|
| | | 4 | 0 | 0 | 1 | Status of ventilation<br>0: No ventilation required<br>1: Ventilation required |
| | | 5 | 0 | 0 | 1 | Status of PWM<br>0: disabled<br>1: enabled |
| | | 6 - 7 | 0 | 0 | 0 | System reserve |
| | 10 - 11 | | | | | Diagnostics |
| | 10 | 0 | 0 | 0 | 1 | CP signal level impermissible [b] |
| | | 1 | 0 | 0 | 0 | System reserve |
| | | 2 | 0 | 0 | 1 | Resistance at PP terminal too low [b], [d] |
| | | 3 | 0 | 0 | 1 | Resistance at PP terminal too high [b] |
| | | 4 | 0 | 0 | 1 | Incorrect feedback for locking [b] |
| | | 5 | 0 | 0 | 1 | Incorrect feedback for unlocking [b] |
| | | 6 | 0 | 0 | 1 | Incorrect feedback for contactor ON [b] |
| | | 7 | 0 | 0 | 1 | Incorrect feedback for contactor OFF [b] |
| | 11 | 0 | 0 | 0 | 1 | No ventilation despite requirement [b] |
| | | 1 | 0 | 0 | 1 | Overload ACT |
| | | 2 | 0 | 0 | 1 | Vandalism diagnostics [c] |
| | | 3 - 4 | 0 | 0 | 0 | System reserve |
| | | 5 | 0 | 0 | 0 | System reserve |
| | | 6 | 0 | 0 | 0 | System reserve |
| | | 7 | 0 | 0 | 1 | Internal error [c] |
| | 12 | - | 0 | -127 | 128 | Voltage level CP [in 0.1 V]<br>EXAMPLE: 90 = 9.0 V; -120 = -12.0 V |
| | 13 | - | 0 | 0 | 255 | Current carrying capacity of charging cable [in A] [e] |
| | 14 - 15 | - | 0 | 0 | $2^{16}$-1 | Charging current signaled to vehicle using PWM [in 0.01 A]<br>EXAMPLE: 1300 = 13 A |

[a] The described states largely correspond to IEC 61851-1 (in decimal representation).

[b] In these cases the error is acknowledged automatically as soon as the charging cable is unplugged from the charging station.

[c] In these cases bit 0.0 (charging outlet enable) must be set to "0" in the control interface for charging outlet 0. After subsequent checking of this error state, the bit must be reset to "1"; otherwise the corresponding charging outlet remains locked. Likewise, bit 4.0 (charging outlet enable) must be set to "0" for charging outlet 1. After subsequent checking of this error state, the bit must be reset to "1"; otherwise the corresponding charging outlet remains locked.

[d] This fault scenario is also reported if SAE J1772 operating mode is selected and the PP conductor of the charging cable is incorrectly connected to the module.

[e] In the SAE J1772 operating mode, you must enter the value set in TIA Portal here.

# Programming

# 5

## 5.1 General information

You can use the function "ECC4100" to integrate the SIMATIC ET 200SP TM ECC 2xPWM ST technology module in the TIA environment. This description is based on the function "ECC4100, Version V1.1".

You can download this function from the SIEMENS Customer Support (https://support.industry.siemens.com/cs/de/en/ps/6FE1242-6TM10-0BB1). It is available in form of the TIA library "ET200SP TM ECC". There you can find it in the folder Types¥PWM.

## 5.2 "ECC4100" functions

### Introduction

Below you can see the inputs and outputs of the ECC4100 function.

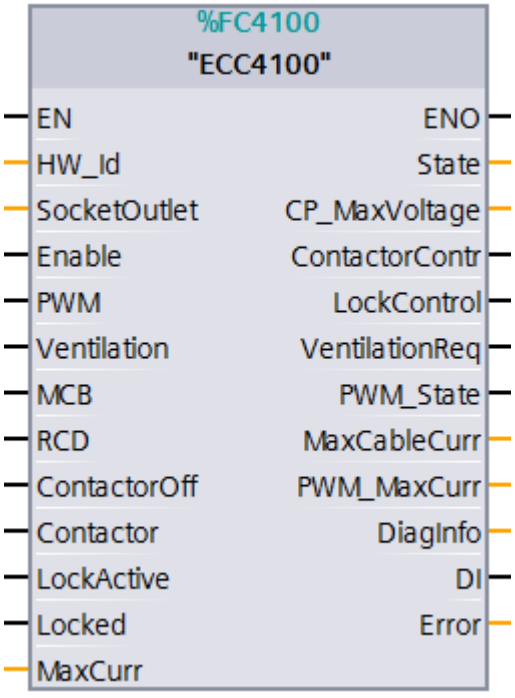


Figure 5-1 Function "ECC4100 (V1.1)"

# 5.3 FC ECC4100 parameters

The "ECC4100" function has the following input and output parameters.

## Input parameters

Table 5- 1 List of input parameters

| Parameter | Data type | Description |
|---|---|---|
| HW_Id | HW_IO | Hardware ID of the SIMATIC ET 200SP TM ECC 2xPWM ST technology module to determine the offset of the process image of the inputs/outputs.<br>If an invalid HW ID is entered, bit 0 is set to "1" at the "Error" output. |
| SocketOutlet | USInt | Number of the associated charging outlet<br>(0 = charging outlet 0, 1 = charging outlet 1)<br>If an invalid number is entered, bit 1 is set to "1" at the "Error" output. |
| Enable | Bool | Charging outlet enable (True = yes, False = no)<br>This input is ANDed with the inputs MCB and RCD. If one of these inputs is set to "0", the CP output signal is set to -12 V in the module.<br>If the inputs Enable, MCB and RCD are set to "1", the CP output signal changes to +12 V.<br>Expanded as of FW version 1.0.4:<br>Execution of an unlocking process at edge transition "True → False", if the "Interlock" parameter in the HSP or the GSDML file is set to "Polarity reversal pulse 800 s" (see table Adjustable parameters and their default settings (Page 34)) |
| PWM | Bool | PWM modulation enable (True = yes, False = no)<br>When charging of the vehicle is enabled, this input must be set to "1" (e.g. after valid authentication or payment). This signals to the vehicle that charging is now possible. If the charging process is to be ended by the charging station (e.g. after the maximum amount of energy has been dispensed), this input must be set back to "0". |
| Ventilation | Bool | Read-back signal ventilation (True = on, False = off)<br>If ventilation is required (State D according to IEC 61851-1), the feedback input of the fan can be connected here. If configured, the charging process is interrupted after three seconds if this input is not set to 1. |
| MCB | Bool | Miniature circuit breaker tripped (True = no, False = yes)<br>This input is ANDed with the inputs Enable and RCD. If one of these inputs is set to "0", the CP output signal is set to -12 V in the module. If the inputs Enable, MCB and RCD are set to "1", the CP output signal changes to +12 V.<br>If no miniature circuit breaker is to be linked to this input, it must be set to "1". |
| RCD | Bool | Residual current operated circuit breaker tripped (True = no, False = yes)<br>This input is ANDed with the inputs Enable and MCB. If one of these inputs is set to "0", the CP output signal is set to -12 V in the module.<br>If the inputs Enable, MCB and RCD are set to "1", the CP output signal changes to +12 V.<br>If no residual current operated circuit breaker is to be linked to this input, it must be set to "1". |

| Parameter | Data type | Description |
|---|---|---|
| ContactorOff | Bool | Contactor is opened (True = yes, False = no)<br>If this bit is set to "True", the PWM signal is switched off if a charging process is active. The contactor opens after four seconds. This bit must be reset to "False" before the next charging process.<br>If this bit is permanently "False", opening or closing is controlled by the module.<br>This input is useful for charging vehicles that do not know a "B" charging state. |
| Contactor | Bool | Contactor closed (True = yes, False = no)<br>If the feedback does not take place directly over the module (can be configured with HSP or GSDML), you can connect the feedback input of the contactor here. The charging process is interrupted after three seconds if this input is not set to "1". A corresponding error is output at the DiagInfo output. The CP output signal changes to -12 V. The same is true when the contactor is opened and this input does not change to "0" in three seconds. (can be configured with HSP or GSDML) |
| LockActive | Bool | Cable lock active (True = yes, False = no)<br>As long as this bit is set to "True", the charging plug is locked on the charging station side.<br>Unlocking by the module is only enabled when this bit is set to "False".<br>Basically, a new charging process can only be started if this bit is "False". Otherwise the LA is locked (without feedback to the user).<br>If this parameter is permanently "False", unlocking is controlled by the module.<br>This input parameter is especially useful when using Type 1 connectors (vehicle side), since the Type 1 connector is not automatically locked. Otherwise the charging cable could be stolen. |
| Locked | Bool | Locked (True = yes, False = no)<br>If the feedback does not take place directly over the module (can be configured with HSP or GSDML), you can connect the feedback input of the locking process here. The charging process is canceled after three seconds if this input is not set to "1". A corresponding error is output at the DiagInfo output. The same is true for unlocking and when this input does not change to "0" in three seconds. |
| MaxCurr | Real | Maximum current of the charging source in ampere.<br>If the specified charging current is less than 6 A or greater than 80 A, the PWM signal is disabled and the value of "MaxCurr" is set internally to "0" in the process image. This includes negative currents (< 0 A). |
| ACT_HIGH | Bool | Expanded as of FW version 1.0.4 and TIA Library as of version 1.2<br>ACT outputs<br>False = ACT outputs ACT0p (or ACT1p) and ACT0n (or ACT1n) high resistance (depends on the "SocketOutlet" input parameter)<br>True = ACT outputs corresponding to bit 6 and bit 7, provided that the "Interlock" parameter in the HSP or GSDML file is set to "No interlock" or "External (via PII)" (see table Adjustable parameters and their default settings (Page 34)) |

| Parameter | Data type | Description |
|---|---|---|
| ACT_P | Bool | Expanded as of FW version 1.0.4 and TIA Library as of version 1.2<br>Voltage at ACT output ACT0p (or ACT1p) (depends on the "SocketOutlet" input parameter)<br>0 = Output voltage 0V<br>1 = Output voltage 12V |
| ACT_N | Bool | Expanded as of FW version 1.0.4 and TIA Library as of version 1.2<br>Voltage at ACT output ACT0n (or ACT1n) (depends on the "SocketOutlet" input parameter)<br>0 = Output voltage 0V<br>1 = Output voltage 12V |

## Output parameters

Table 5- 2 List of output parameters

| Parameter | Data type | Description |
|---|---|---|
| State | Byte | Charging state<br>The state is output at this output largely according to IEC 61851-1.<br>• 0: Charging outlet blocked (no state according to IEC 61851-1)<br>• 1: State A (state according to IEC 61851-1)<br>• 2: State B (state according to IEC 61851-1)<br>• 3: State C (state according to IEC 61851-1)<br>• 4: State D (state according to IEC 61851-1)<br>• 5: State E (state according to IEC 61851-1, but is also displayed in case of CP error; the voltage at the CP output remains at +12 V, PWM is disabled in this case)<br>• 6: State F (state according to IEC 61851-1) |
| CP_MaxVoltage | Real | Max. CP voltage value (in Volt) |
| ContactorContr | Bool | Load contactor state (module DQ state) (True = contactor on; False = contactor off)<br>This output can be used for additional evaluations of the load contactor state in the TIA application (e.g. counting switching cycles for maintenance purposes). |
| LockControl | Bool | Locking (True = yes), Unlocking (False = no)<br>This output can be used for additional evaluations of the locking state in the TIA application (e.g. for external control of locking the charging cable connector). |
| VentilationReq | Bool | Ventilation required (True = yes, False = no)<br>This output signals that ventilation must be connected (State D according to IEC 61851-1). |

| Parameter | Data type | Description |
|---|---|---|
| PWM_State | Bool | PWM enabled (True = on, False = off)<br>This output indicates whether PWM is switched on or off. PWM is disabled in case of CP voltage errors, locking feedback errors or ventilation feedback errors. This signals to the vehicle that charging is not possible under these circumstances. |
| MaxCableCurr | Real | Maximum detected current carrying capacity of the cable in ampere based on PP evaluation |
| PWM_MaxCurr | Real | Charging current [in ampere] signaled to the vehicle using PWM<br>(minimum of the three values "FC input MaxCurr", "Current carrying capacity of the cable" and the parameter "Maximum charging current") |
| DiagInfo | Word | Diagnostic information of the charging outlet<br>This output displays the error messages from the SIMATIC ET 200SP TM ECC 2xPWM ST technology module:<br>• Bit 00: CP voltage level impermissible [a]<br>(may be vehicle problem; change to state E)<br>• Bit 01: Reserved<br>• Bit 02: Resistance at PP terminal too low [a), b)]<br>(possibly inadmissible cable or wrong cable wiring for SAE J1772)<br>• Bit 03: Resistance at PP terminal too high [a]<br>(may be impermissible cable)<br>• Bit 04: No feedback after locking [a]<br>(may be connector problem)<br>• Bit 05: No feedback after unlocking<br>(CP output voltage goes to -12 V, change to state F)<br>• Bit 06: No feedback after contactor ON [c]<br>(CP output voltage goes to -12 V, change to state F)<br>• Bit 07: No feedback after contactor OFF [c]<br>(CP output voltage goes to -12 V, change to state F)<br>• Bit 08: No ventilation active in case of request by vehicle<br>• Bit 09: Overload ACT<br>• Bit 10: Vandalism diagnostics<br>• Bit 11..14: Reserved<br>• Bit 15: Module-internal error [c]<br>(CP output voltage goes to -12 V, change to state F) |
| DI | Bool | Value of the digital input |
| Error | USInt | Bit 0 = invalid HW_ID<br>Bit 1 = invalid value at SocketOutlet input<br>Bit 2= invalid values PII |

a) In these cases the error is acknowledged automatically as soon as the charging cable is unplugged from the charging station.

b) This error is also set if SAE J1772 operating mode is selected and the PP conductor of the charging cable is incorrectly connected to the module.

c) In these cases, the "Enable" input must be set to "0". After subsequent checking of this error state, this input must be reset to "1"; otherwise the corresponding charging outlet remains locked.

# Interrupts/diagnostic messages

# 6

## 6.1 Status and error displays

### Front view of the SIMATIC ET 200SP TM ECC 2xPWM ST technology module




Figure 6-1 Device front with LEDs

### Meaning of the LEDs

The following tables show the meaning of the status and error displays. You can find details for troubleshooting in the section "Diagnostics alarms (Page 50)".

## DIAG LED

| DIAG LED | Meaning | To remove and prevent errors |
|---|---|---|
| ☐ Off | Backplane bus supply of the ET 200SP not OK | Check and switch on supply voltage of the head-end station. Make sure that the SIMATIC ET 200SP TM ECC 2xPWM ST technology module in inserted correctly into the BaseUnit. |
| ☼ Flashing | Technology module not parameterized | Download a configuration that contains the technology module. |
| ■ On | Technology module configured but no module diagnostics (no error present) | |
| ☼ Flashing | Technology module configured and module diagnostics (at least one error present) | Check the configuration and parameter assignment in your engineering tool (e.g. TIA Portal) or evaluate the diagnostic interrupts and remedy the error. |

**Note**

The DIAG LED only shows an error when you have enabled the corresponding diagnostic interrupt in the device configuration. By default, it is not enabled.

## PWR LED

| PWR LED | Meaning | To remove and prevent errors |
|---|---|---|
| ☐ Off | No supply voltage L+ | • BU type B1: Check the external 24 V DC supply voltage between L+ and M.<br>• BU type B0: Check the 24 V DC supply voltage of the supplying potential group. |
| ■ On | Supply voltage L+ present | |

## Status LEDs

| LEDs | Meaning |
|---|---|
| **EN0/EN1** | **Charging outlet state (enable)** |
| ☐ Off | Charging outlet 0 (EN0) or charging outlet 1 (EN1) disabled.<br>The corresponding VS0/VS1-LED and error LED F0/F1 is also off in this case. |
| ■ On | Charging outlet 0 (EN0) or charging outlet 1 (EN1) enabled. |
| ☼ flashes, 1 Hz | Charging outlet 0 (EN0) or charging outlet 1 (EN1) blocked by user program. |
| ☼ flashes, 2 Hz | Communications fault for charging outlet 0 (EN0) or charging outlet 1 (EN1).<br>CPU is in STOP or the PIQ valid bit is not set. |
| **VS0/VS1** | **Vehicle state** |
| ☐ Off | No vehicle is connected to the charging station.<br>(State "A") if no error is pending (see LED F0/F1)<br>(State "F") if error is pending (see LED F0/F1) |
| ■ On | A vehicle is connected to the charging station and ready for charging.<br>(State "B") |
| ☼ flashes, 1 Hz | Vehicle charging<br>(State "C") |
| ☼ flashes, 2 Hz | Vehicle charging, ventilation required<br>(State "D") |
| **Q0/Q1** | **Contactor control** |
| ☐ Off | Contactor for charging outlet 0 (DQ0) or charging outlet 1 (DQ1) not controlled. |
| ■ On | Contactor for charging outlet 0 (DQ0) or charging outlet 1 (DQ1) not controlled.<br>(This is not a functional check for the corresponding contactor; it only shows whether it is activated. Only readback of the affected feedback input provides certainty.) |
| **I0/I1** | **Status/feedback DI** |
| ☐ Off | Status of the feedback input for charging outlet 0 (DI0) or charging outlet 1 (DI1) |
| ■ On | Status of the feedback input for charging outlet 0 (DI0) or charging outlet 1 (DI1) |
| **A0/A1** | **Locking status** |
| ☐ Off | Status of connector locking for charging outlet 0 (A0) or charging outlet 1 (A1)<br>"Connector unlocked" or no locking active<br>(If no feedback is configured with GSDML or HSP, this LED always stays "off") |
| ■ On | Status of connector locking for charging outlet 0 (A0) or charging outlet 1 (A1)<br>"Connector locked" |

### Status LEDs

| F0/F1 | Error message | To remove and prevent errors |
|---|---|---|
| ▫ Off | No error | |
| ■ On | External error<br>Possible causes:<br>• Short circuit of the CP conductor to earth<br>• PP error<br>• Locking feedback error<br>• Ventilation feedback error | Please evaluate the corresponding diagnostic information in the feedback interface. It also provides detailed information.<br>If you are using the "ECC4100 function", you can find the corresponding detailed information on the "DiagInfo" output parameter in the table "List of output parameters (Page 44)". |
| ☼ Flashing | Internal error<br>Possible causes:<br>• Contactor feedback error<br>• Hardware error in the module<br>• Unlocking feedback error<br>• PP error during parameter assignment "Charging cable permanently connected to the station" | Please evaluate the corresponding diagnostic information in the feedback interface. It also provides detailed information.<br>If you are using the "ECC4100 function", you can find the corresponding detailed information on the "DiagInfo" output parameter in the table "List of output parameters (Page 44)". |

### See also

FC ECC4100 parameters (Page 42)

## 6.2 Interrupts

The TM ECC 2xPWM ST technology module does not have any hardware interrupts.

## 6.3 Diagnostics alarms

The DIAG LED flashes red when a diagnostics alarm is present.

In STEP 7 (TIA Portal), the diagnostic results are displayed by means of the Online and Diagnostics view. You can evaluate the error codes with the user program.

The following diagnostics alarms can be signaled:

Table 6- 1 Diagnostics alarms, their meaning and remedies

| **Diagnostics alarms** | **Error code** | **Meaning** | **Corrective measures** |
|---|---|---|---|
| Error | $9_H$ | An internal module error has occurred. | Replace module |
| No load voltage | $11_H$ | No supply voltage L+ of the technology module | • Check BaseUnit type<br>• Check wiring of the supply voltage L+ on the BaseUnit |
| External error | $1A_H$ | This error can be caused by:<br>• CP level not permitted<br>The voltage value is not in the tolerance band specified in IEC61851.<br>• Impermissible resistance at the PP terminal<br>The resistance value in the connector of the charging cable does not correspond to the specified tolerance band. See (Page 41) paragraph "Plug Present signal PP0 and PP1".<br>• Vandalism detected<br>Vandalism is detected when the affected charging outlet is considered locked, but the resistance value at the associated PP terminal has become high resistance (e.g. when the charging connector was forcefully pulled out of the charging station socket).<br>• No feedback after locking<br>The signal of the feedback input does not match the "Locked" state.<br>• No feedback after unlocking<br>The signal of the feedback input does not match the "Unlocked" state.<br>• No feedback after contactor "On" or "Off"<br>The signal of the feedback input does not match the contactor state.<br>• No feedback after ventilation "On" or "Off"<br>The signal of the feedback input does not match the ventilation state. | • Check the wiring<br>• Replace defective components |

| Diagnostics alarms | Error code | Meaning | Corrective measures |
|---|---|---|---|
| Channel / component temporarily unavailable | $1F_H$ | Update of the firmware is being performed or has been canceled. The module does not read any process values in this state. | • Wait for firmware update<br>• Restart the firmware update |
| Errors at digital outputs | $4_H$ | This error can be caused by:<br>• Overload at outputs ACT0n, ACT0p, ACT1n, ACT1p | • Check process wiring |

## 6.4 Device defect

### Repairs

Repairs by the user or service engineers are not permitted. In case of error please contact Service&Support (https://support.industry.siemens.com/cs/ww/en/sc/3098).

**WARNING**

**Electric shock hazard**

**May cause death or serious injury**

Unauthorized opening of the device might place the user in danger or result in substantial damage to property.

# Technical specifications

7

## 7.1 Technical specifications

| | 6FE1242-6TM10-0BB1 |
|---|---|
| **General Information** | |
| Product brand name | SIMATIC |
| Product family | ET 200SP |
| Product category | Technology module |
| Product type designation | TM ECC 2xPWM ST |
| Product designation | Charging controller for conductive charging of electric vehicles |
| Firmware version | V1.04 |
| • FW update possible | Yes |
| Type of product | Technology module |
| Number of channels | 2; according to IEC 61851 and SAE J1772 |
| **Product function** | |
| I&M data | Yes; I&M 0 to 3 |
| isochronous mode | No |
| **Engineering with** | |
| STEP 7 TIA Portal can be configured/integrated as of version | STEP 7 V14 SP1 and higher |
| **Installation type/mounting** | |
| Mounting type | Standard mounting rail |
| Mounting position | vertical or horizontal |
| **Supply voltage** | |
| Voltage type of supply voltage | DC |
| Rated value (DC) | 24 V |
| Permitted range, low limit (DC) | 19.2 V |
| Permitted range, high limit (DC) | 28.8 V |
| Reverse polarity protection | Yes; against destruction |
| **Input current** | |
| Current consumption, typ. | 40 mA |
| Current consumption, max. | 90 mA |
| **Digital inputs** | |
| Number of inputs | 2; 1 per channel |
| Digital inputs parameterizable | Yes; 12 V/24 V |
| **Functions of digital inputs, parameterizable** | |
| Freely usable digital input | No, read-back contact contactor / connector locking |

| | **6FE1242-6TM10-0BB1** |
|---|---|
| **Input voltage** | |
| Type of input voltage | DC |
| For signal "0" | < 0.2x $U_{nominal}$ |
| For signal "1" | > 0.6x $U_{nominal}$ |
| Permitted voltage at input, min. | 0 V |
| Permitted voltage at input, max. | 30 V |
| **Cable length** | |
| Unshielded, max. | 30 m |
| **Digital outputs** | |
| Type of digital output | Transistor |
| Number of outputs | 2; 1 per channel |
| Short-circuit proof | Yes |
| Short-circuit protection | Yes; electronic / thermal |
| **Functions of digital outputs, parameterizable** | |
| PWM output | Yes; according to IEC 61851 and SAE J1772 |
| • Number, max. | 2; 1 per channel |
| • Time period, parameterizable | No; 1 kHz |
| **Output switching capacity** | |
| With resistance load, max. | 1.3 A |
| **Output voltage** | |
| Type of output voltage | DC |
| Output voltage | 24 V |
| **Cable length** | |
| Unshielded, max. | 30 m |
| **Protocols** | |
| Bus communication | Yes |
| Vehicle communication according to IEC 61851 | Yes; MODE 3 |
| Vehicle communication according to SAE J1772 | Yes |
| **Interrupts/diagnostics/status information**<br>**Interrupts** | |
| Diagnostic interrupt | Yes |
| **Diagnostics alarms** | |
| Monitoring of supply voltage | Yes |
| Short circuit | No |
| Overload | Yes |
| **Diagnostics indicator LED** | |
| RUN LED | Yes; green LED |
| ERROR LED | Yes; red LED |
| Monitoring of supply voltage (PWR LED) | Yes; green PWR LED |
| Channel status display | Yes; green LED |

| | **6FE1242-6TM10-0BB1** |
|---|---|
| For module diagnostics | Yes; green/red DIAG LED |
| **Galvanic isolation** | |
| **Galvanic isolation of channels** | |
| Between channels | No |
| Between channels and backplane bus | Yes |
| **Insulation** | |
| Insulation test voltage | 707 V DC |
| Degree of pollution | 2 |
| **EMC** | |
| Electrostatic discharge according to IEC 61000-4-2: 2008 | |
| Field-based interference according to IEC 61000-4-3: 2006 | |
| Conducted interference / due to burst / according to IEC 61000-4-4: 2012 | |
| Conducted interference / due to surge / according to IEC 61000-4-5: 2014 | |
| Conducted interference / due to high-frequency radiation / according to IEC 61000-4-6: 2013 | |
| **Degree of protection and protection class** | |
| IP degree of protection | IP20 |
| **Standards, approvals, certificates** | |
| Proof of suitability | CE |
| **Ambient conditions** | |
| **Ambient temperature during operation** | |
| Minimum | -30 ° C |
| Horizontal mounting position, max. | 60 ° C |
| Vertical mounting position, max. | 50 ° C |
| **Ambient temperature during storage/transport** | |
| Storage, min. | -40 ° C |
| Storage, max. | 70 ° C |
| Transport, min. | -40 ° C |
| Transport, max. | 70 ° C |
| **Relative humidity** | |
| Operation, min. | 5% |
| Operation, max. | 95%, no condensation |
| **Extended range of ambient conditions** | |
| with reference to ambient temperature, air pressure and altitude | $T_{min}$ ... $T_{max}$ at 1080 hPa ... 795 hPa (-1000 m ... +2000 m) |
| **Distributed operation** | |
| on SIMATIC S7-1500 | Yes |
| **Dimensions** | |
| Width | 20 mm |
| Height | 73 mm |
| Depth | 58 mm |
| **Weight** | 32 g |

## Technical specifications of the BaseUnit

See ET 200SP BaseUnits Manual
(http://support.automation.siemens.com/WW/view/en/58532597/133300)

# Index


## A

ACT0p/n, 24
ACT1p/n, 24
Adjustable parameters, 34, 34
Assignment of the control interface, 35
Assignment of the feedback Interface, 38

## B

BaseUnit, 13
BaseUnit BU type B0
    Pin assignment, 19
BaseUnit BU type B1
    Pin assignment, 18
Block diagrams, 26
BU type B0, 13
BU type B1, 13

## C

Connection example, 26
    with electromagnetic connector locking, 30
    with electromotive connector locking, 29
    with feedback from contactor status, BU type B0, 28
    with feedback from contactor status, BU type B1, 26
Connector locking, 24
Control interface, 35
Control Pilot, 20
CP, 32
CP0, 20
CP1, 20
CPU STOP, 32

## D

Device configuration, 33
DI0, 20
DI1, 20
DIAG, 48
DIAG LED, 50
Diagnostics alarm, 50
Displays, 47
DQ, 32
DQ0, 19
DQ1, 19

## F

FC ECC4100
    Input parameters, 42
    Output parameters, 44
FC ECC4100 parameters, 42
Feedback interface, 38
Functions, 12

## G

GSD file, 32, 33
GSD file download, 32

## H

Hardware catalog, 31
Hardware configuration, 33
Hardware Support Package (HSP), 31
HSP download, 31
HSP file, 33

## I

Input parameters, 42
Inputs, 13
Inputs and outputs, 13

## L

LED
    A0, A1, 49
    DIAG, 48, 50
    EN0, EN1, 49
    F0, F1, 50
    I1, I0, 49
    PWR, 48
    Q0, Q1, 49
    Status, 49, 50
    VS0, VS1, 49

## M

Module view, 11

## O

Output parameters, 44
Outputs, 13

## P

Parameter, 33
Pin assignment of the BaseUnit BU type B0, 19
Pin assignment of the BaseUnit BU type B1, 18
Plug Present signal, 23
PP0, 23
PP1, 23
Product photo, 11
Properties of the module, 12
PWR, 48

## R

Reaction to CPU STOP, 32
Repairs, 52

## S

Status LED, 49, 50
System environment, 13

## T

Technical specifications, 53

## V

View of the module, 11