SIEMENS

Data sheet US2:40DP320C

Non-reversing NEMA contactor, Size 1, Three phase full voltage, Contactor amp rating 27A, 3 wire (NO aux included), 220-240/440-480VAC 60Hz coil, Non-combination type, Enclosure NEMA type 12, Dust/drip proof for indoors, Standard width enclosure



Figure similar

Product brand name	Class 40
Design of the product	Non-reversing contactor
Special product feature	Dual voltage coil

General technical data

Weight [lb]	11 lb
Height x Width x Depth [in]	13 × 8 × 5 in
Protection against electrical shock	NA for enclosed products
Installation altitude [ft] at height above sea level maximum	6560 ft
Ambient temperature [°F]	
• during storage	-22 ... +149 °F
• during operation	-4 ... +104 °F
Ambient temperature	
• during storage	-30 ... +65 °C
• during operation	-20 ... +40 °C
Country of origin	USA

Horsepower ratings

Subject to change without notice
© Copyright Siemens

Yielded mechanical performance [hp] for three-phase AC motor	
• at 200/208 V rated value	7.5 hp
• at 220/230 V rated value	7.5 hp
• at 460/480 V rated value	10 hp
• at 575/600 V rated value	10 hp

Contactor	
Size of contactor	NEMA controller size 1
Number of NO contacts for main contacts	3
Operating voltage for main current circuit at AC at 60 Hz maximum	600 V
Operating current at AC at 600 V rated value	27 A
Mechanical service life (switching cycles) of the main contacts typical	10000000

Auxiliary contact	
Number of NC contacts at contactor for auxiliary contacts	0
Number of NO contacts at contactor for auxiliary contacts	1
Number of total auxiliary contacts maximum	8
Contact rating of auxiliary contacts of contactor according to UL	10A@600VAC (A600), 5A@600VDC (P600)

Coil	
Type of voltage of the control supply voltage	AC
Control supply voltage	
• at AC at 60 Hz rated value	220 ... 480 V
Holding power at AC minimum	8.6 W
Apparent pick-up power of magnet coil at AC	218 V·A
Apparent holding power of magnet coil at AC	25 V·A
Operating range factor control supply voltage rated value of magnet coil	0.85 ... 1.1
Percental drop-out voltage of magnet coil related to the input voltage	50 %
Switch-on delay time	19 ... 29 ms
Off-delay time	10 ... 24 ms

Enclosure	
Degree of protection NEMA rating of the enclosure	NEMA Type 12
Design of the housing	Dust tight and drip proof for indoors

Mounting/wiring	
Mounting position	Vertical
Mounting type	Surface mounting and installation

Subject to change without notice
© Copyright Siemens

Type of electrical connection for supply voltage line-side	Screw-type terminals
Tightening torque [lbf·in] for supply	35 ... 35 lbf·in
Type of connectable conductor cross-sections at line-side at AWG conductors single or multi-stranded	1x (14 ... 2 AWG)
Temperature of the conductor for supply maximum permissible	75 °C
Material of the conductor for supply	AL or CU
Type of electrical connection for load-side outgoing feeder	Screw-type terminals
Tightening torque [lbf·in] for load-side outgoing feeder	35 ... 35 lbf·in
Type of connectable conductor cross-sections at AWG conductors for load-side outgoing feeder single or multi-stranded	1x (14 ... 2 AWG)
Temperature of the conductor for load-side outgoing feeder maximum permissible	75 °C
Material of the conductor for load-side outgoing feeder	AL or CU
Type of electrical connection of magnet coil	Screw-type terminals
Tightening torque [lbf·in] at magnet coil	5 ... 12 lbf·in
Type of connectable conductor cross-sections of magnet coil at AWG conductors single or multi-stranded	2x (16 ... 12 AWG)
Temperature of the conductor at magnet coil maximum permissible	75 °C
Material of the conductor at magnet coil	CU
Type of electrical connection at contactor for auxiliary contacts	Screw-type terminals
Tightening torque [lbf·in] at contactor for auxiliary contacts	10 ... 15 lbf·in
Type of connectable conductor cross-sections at contactor at AWG conductors for auxiliary contacts single or multi-stranded	1x (12 AWG), 2x (16 ... 14 AWG), 2x (18 ... 16 AWG)
Temperature of the conductor at contactor for auxiliary contacts maximum permissible	75 °C
Material of the conductor at contactor for auxiliary contacts	CU

Short-circuit current rating	
Design of the fuse link for short-circuit protection of the main circuit required	10kA@600V (Class H or K); 100kA@600V (Class R or J)
Design of the short-circuit trip	Thermal magnetic circuit breaker
Maximum short-circuit current breaking capacity (Icu)	
• at 240 V	14 A
• at 480 V	10 A
• at 600 V	10 A

Subject to change without notice
© Copyright Siemens

Further information

Industrial Controls - Product Overview (Catalogs, Brochures,…)
www.usa.siemens.com/iccatalog

Industry Mall (Online ordering system)
https://mall.industry.siemens.com/mall/en/us/Catalog/product?mlfb=US2:40DP320C

Service&Support (Manuals, Certificates, Characteristics, FAQs,...)
https://support.industry.siemens.com/cs/US/en/ps/US2:40DP320C

Image database (product images, 2D dimension drawings, 3D models, device circuit diagrams, EPLAN macros, ...)
http://www.automation.siemens.com/bilddb/cax_de.aspx?mlfb=US2:40DP320C&lang=en

Certificates/approvals
https://support.industry.siemens.com/cs/US/en/ps/US2:40DP320C/certificate

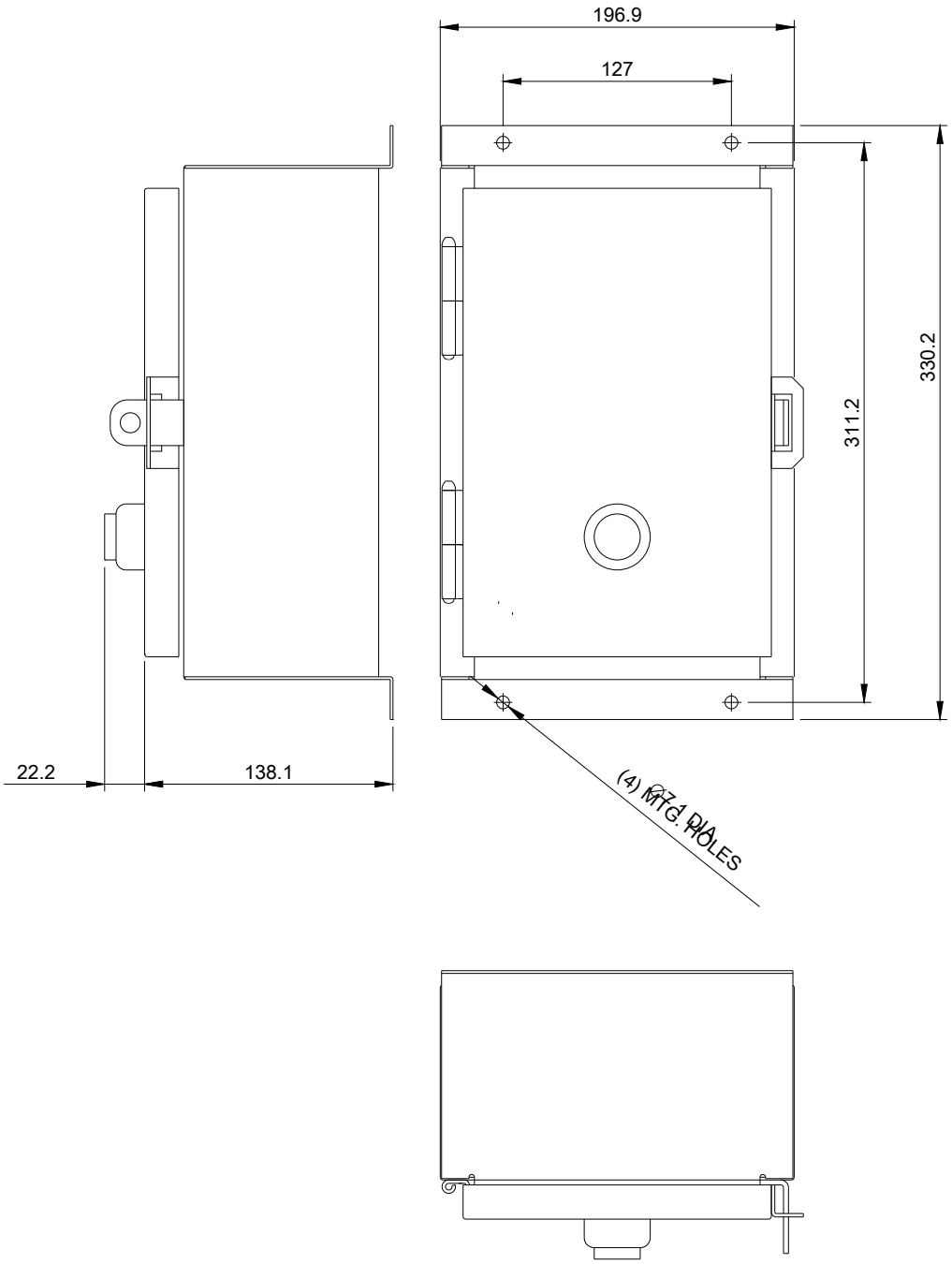

© Copyright Siemens

%%uWIRING DIAGRAM

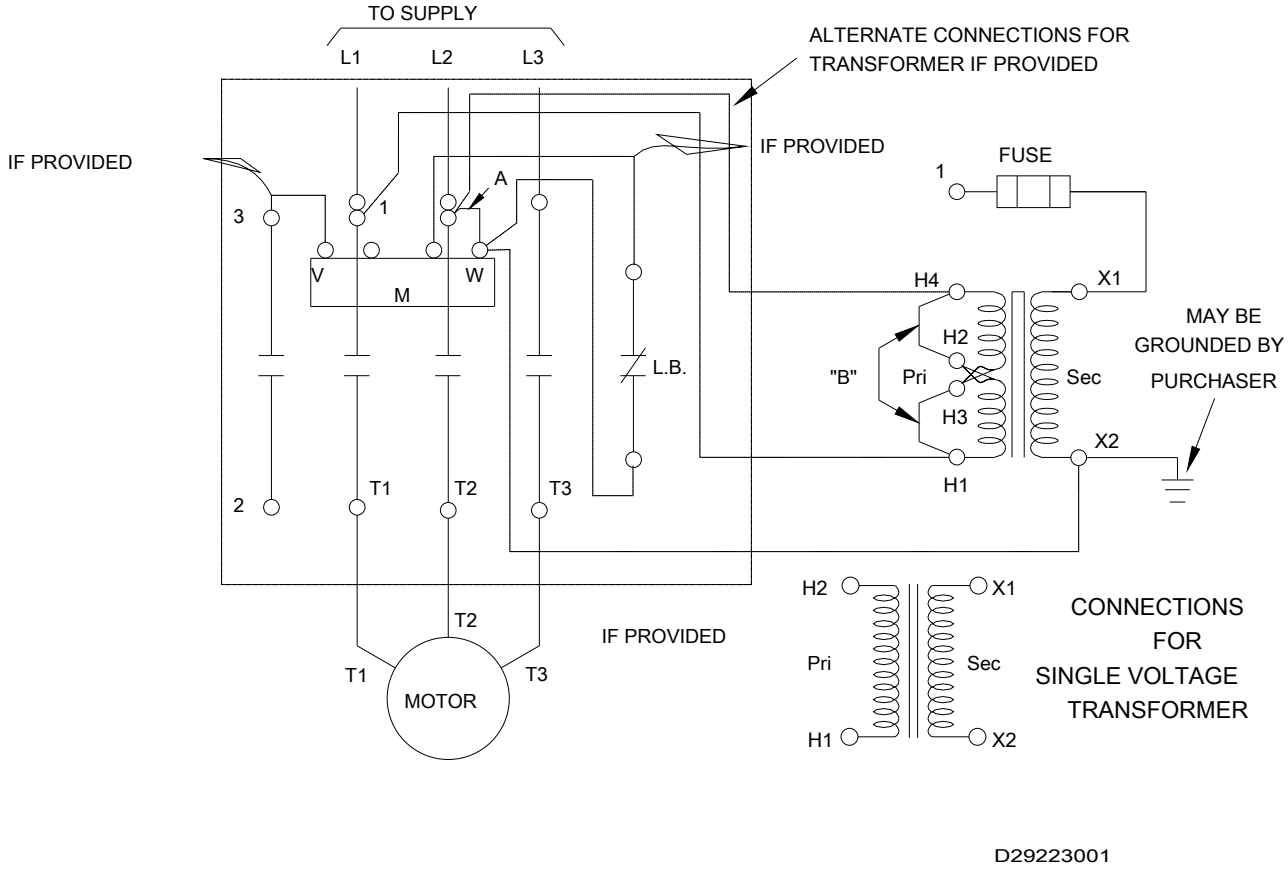

D29223001

last modified: 11/15/2019

Subject to change without notice
© Copyright Siemens