SIEMENS

Data sheet 5SJ4211-7HG41

Miniature circuit breaker 240 V 14kA, 2-pole, C, 5A, D=70 mm according to UL 489

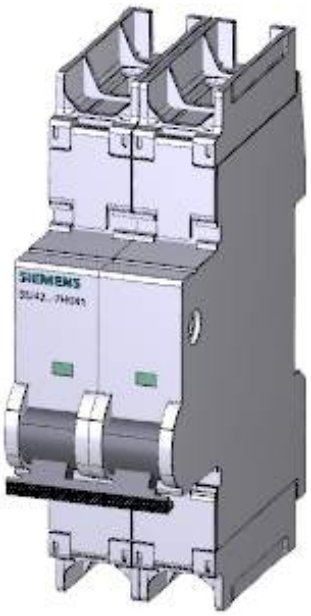

Model	
Product brand name	SENTRON
Product designation	Miniature circuit breakers
Design of the product	Miniature circuit-breaker 5SJ4

General technical data	
Number of poles	2
Number of poles / Note	2P
Tripping characteristic class	C
Installation environment regarding EMC	Suitable for environment B (immunity to interference not applicable)
circuit-breaker / Design	5SJ4
Mechanical service life (switching cycles) / typical	20 000
Reference code / acc. to DIN 40719 extended according to IEC 204-2 / acc. to IEC 750	F
Overvoltage category	3

Voltage	
Type of voltage	AC/DC
Insulation voltage / at AC / rated value	440 V

Subject to change without notice
© Copyright Siemens

Supply voltage	
Supply voltage / at AC / rated value	400 V
Supply voltage frequency / rated value	50 Hz

Protection class	
Protection class IP	IP20, with connected conductors, IP 40 in the handle range

Switching capacity	
Switching capacity current	
• acc. to EN 60898 / rated value	10 kA
• acc. to IEC 60947-2 / rated value	15 kA

Dissipation	
Power loss [W] / for rated value of the current / at AC / in hot operating state / per pole	2.9 W

Electricity	
Tripping residual / rated value / derated current / at 40 Cel	5 A
Current / at AC / rated value	5 A

Main circuit	
Type of voltage supply / at AC / acc. to UL 489 and CSA C22.2 No. 5-02	240
Operating voltage	
• minimum	24 V
• at AC / acc. to UL 489 and CSA C22.2 No. 5-02 / maximum	240 V
• at DC / 1-channel / acc. to UL 489 and CSA C22.2 No. 5-02 / maximum	60 V
• at DC / 2-channel / acc. to UL 489 and CSA C22.2 No. 5-02 / maximum	125 V
• at DC / rated value / maximum	60 V
Suitability for operation	Mechanical engineering / industry

Product details	
Product feature / Touch protection	Yes
Product component	
• Tunnel terminals top	No
• Tunnel terminals bottom	No
• combined terminal top	Yes
• combined terminal bottom	Yes
Product feature	
• halogen-free	Yes
• sealable	Yes
• silicon-free	Yes

Subject to change without notice
© Copyright Siemens

Product extension / can be installed / supplementary devices	Yes

Product function	
Product function	
• Note	Terminal tightening torque for Cu, 60/75°C; 3.5Nm/31lb.in
• neutral conductor switching	No

Short circuit	
Breaking capacity short-circuit current (Icn) / at AC / acc. to UL 1077 and CSA C22.2 No.235	14 kA

Number	
Number of test cycles / for environmental testing / acc. to IEC 60068-2-30	6

Connections	
Connectable conductor cross-section / finely stranded / with core end processing	
• minimum	1.5 mm²
• maximum	25 mm²
Position / of power supply cord	Any

Mechanical Design	
Height	90 mm
Width	36 mm
Depth	70 mm
Mounting position	any
Installation depth	70 mm
Number of width units	2
Mounting type	on standard mounting rail
Net weight	327 g

Environmental conditions	
Degree of pollution	3
Influence of the surrounding temperature	max. 95% humidity
Vibration resistance	50 m/s² at 25 to 150Hz and 60m/s² at 35Hz (4sec)
Vibration resistance / acc. to IEC 60068-2-6	50 m/s² at 25 to 150Hz and 60m/s² at 35Hz (4sec)
Ambient temperature	
• minimum	-25 °C
• maximum	55 °C
• during storage / minimum	-40 °C
• during storage / maximum	75 °C

Certificates	
Reference code	
• acc. to DIN EN 61346-2	F

© Copyright Siemens

- acc. to DIN EN 81346-2 | F

General Product Approval			Declaration of Conformity	Test Certificates	
CCC	UL	VDE	EG-Konf.	Miscellaneous	Special Test Certificate

Further information

Information- and Downloadcenter (Catalogs, Brochures,…)
http://www.siemens.com/lowvoltage/catalogs

Industry Mall (Online ordering system)
https://mall.industry.siemens.com/mall/en/en/Catalog/product?mlfb=5SJ4211-7HG41

Service&Support (Manuals, Certificates, Characteristics, FAQs,...)
https://support.industry.siemens.com/cs/ww/en/ps/5SJ4211-7HG41

Image database (product images, 2D dimension drawings, 3D models, device circuit diagrams, ...)
http://www.automation.siemens.com/bilddb/cax_en.aspx?mlfb=5SJ4211-7HG41

CAx-Online-Generator
http://www.siemens.com/cax

Tender specifications
http://www.siemens.com/specifications

Subject to change without notice
© Copyright Siemens

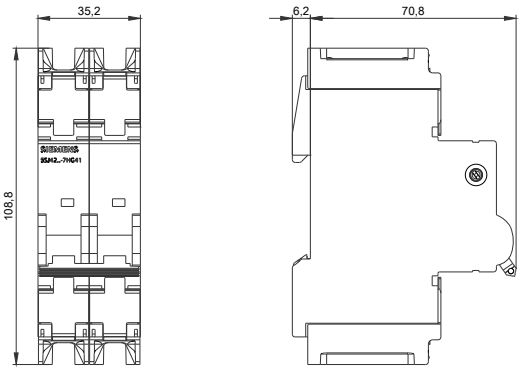

Subject to change without notice
© Copyright Siemens

Subject to change without notice
© Copyright Siemens