onlinecomponents.com
THE ONLINE DISTRIBUTOR OF ELECTRONIC COMPONENTS

Contents

8US and Fast Bus busbar adapter system

8US1

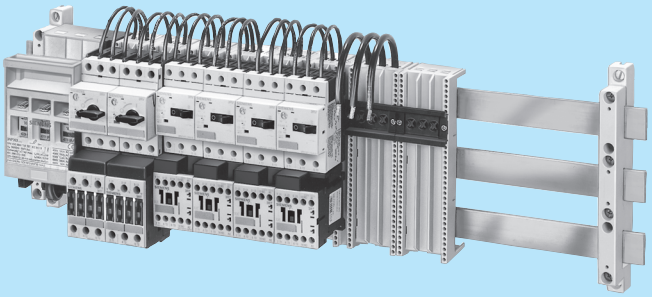

60 mm system

	Page
Selection and ordering data	
• Busbar holders	5/7
• Fast Bus adapter shoes	5/7, 5/9, 5/10
• Incoming supply terminals	5/6, 5/8
• Copper busbar	5/7, 5/10
• Busbar covers	5/8–12
• Other accessories	5/2
	5/3–5
	5/13–27
Overview	5/2
Introduction	5/3
Technical data	5/3
Dimension drawings	5/13

FBCB Fast Bus circuit breakers





FBCB Fast Bus main and feeder circuit breakers

	Page
Selection and ordering data	
• Fast Bus circuit breakers	5/7
• Fast Bus adapter shoes	5/6, 5/8

3RA1 Fast Bus combination starters

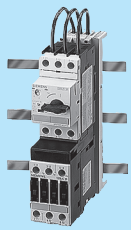

3RA1 Fast Bus combination starters

Selection and ordering data

• See section 4

onlinecomponents.com

Overview

Busbar adapter systems

Busbar adapter systems
with busbar centerline spacing of 40 mm or 60 mm,

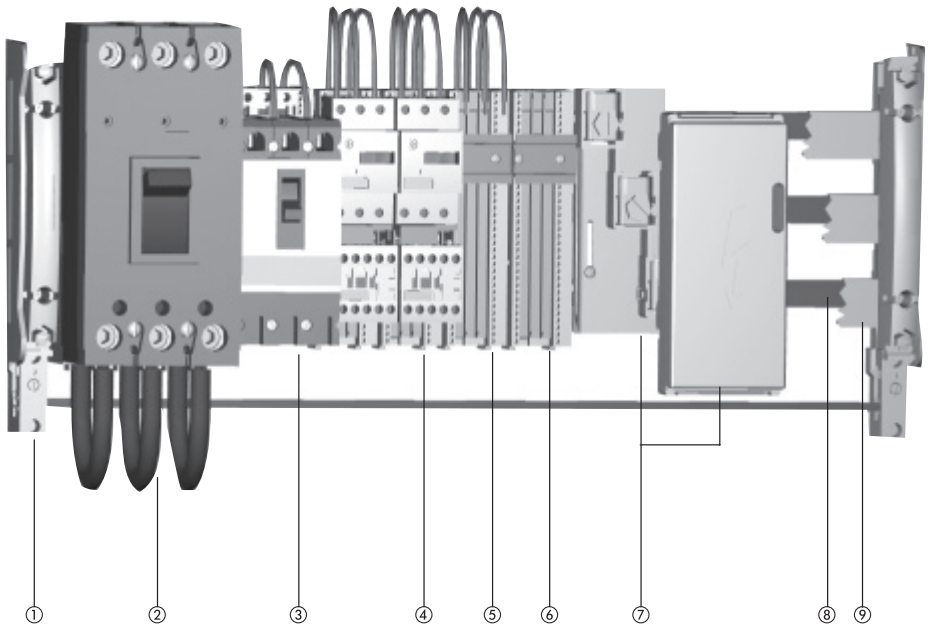

60 mm busbar system

for sharp-edged copper busbars to DIN 46 433, width 12 mm to 30 mm, thickness 5 mm and 10 mm

	Page
① **Busbar holder** End and intermediate holders for flat copper profiles	5/7, 5/10
② **Fast Bus main circuit breakers** from 100 to 250A	5/7
③ **Fast Bus circuit breakers** from 15 to 250A	5/7
④ **3RA1 Combination Starters**	see section 5
⑤ **Busbar adapter shoe** with wire, for SIRIUS devices size S00 (12.5 A) to S3 (100 A), or other devices (e.g. 5SY supplementary protectors)	5/6, 5/8
⑥ **Busbar adapter shoe** without wire for holding SIRIUS devices size S00 (12.5 A) to S2 (100 A), or for selfwiring	5/6, 5/8
⑦ **Incoming supply terminals**	5/10
⑧ **Copper Busbar**	5/7, 5/10
⑨ **Busbar covers** 12 mm x 5 mm up to 30 mm x10 mm	5/10

onlinecomponents.com
THE ONLINE DISTRIBUTOR OF ELECTRONIC COMPONENTS

8US and Fast Bus Busbar Adapter System

General

The Fast Bus Multi-Motor Control system is a 3-phase insulated busbar system used to reduce wire connections and hole drilling when building control panels. SIRIUS 3RV/3RT starter combinations built from components and Siemens circuit breakers use Fast Bus for convenient mounting.

Fast Bus is not new to Siemens. However, due to the narrower SIRIUS starter components, more starters will fit on the same run of Fast Bus.

Features

- Simple economical installation
- Compact design
- Requires fewer mounting holes
- Domestic and International approvals
- Touch safe
- Modular design
- Provision for system expansion
- Clip-on shoes provide mechanical and electrical connections to panel mounted busbar
- Main and Feeder breakers mount to busbars

Benefits

- Saves installation time
- Reduces space requirements
- Minimizes layout time
- Allows flexibility for domestic and export business
- Protection for maintenance personnel
- Improves equipment mounting density
- Reduces time and costs associated with system expansion
- Reduces mounting and wiring time and provides trouble free connections
- Allows for quick retrofitting of breakers

How to Select Fast Bus

1) Determine the required load.

2) Select method to power Fastbus.

—Main lug up to 600A

—Circuit breakers, 15A to 250A

If load exceeds 250A, the CB must be separately panel mounted.

3) Select 3RV MSP & 3RT contactor components and appropriate adapter shoe or select 3RA factory assemblies.

4) Select appropriate length busbar, busbar support kit, insulation covers and any other required components.

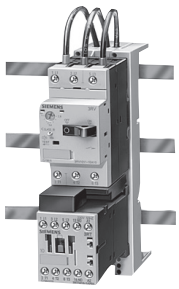

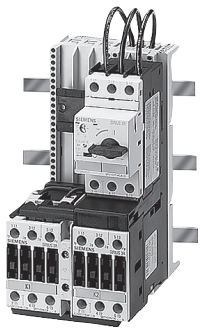

General Ratings of Fast Bus System

	IEC	Domestic
Rated operating voltage	690V	600V
Rated insulation voltage, IEC VDE	AC 1000V	N/A
Temperature stability	Up to 105 degrees C	N/A
Busbar support and adapter shoe material	Glass-reinforced polyamide	Same
Color	RAL 7035, light gray	Same

Ampacity

3 single busbars		
.19" x .75"	Domestic	362A
5 X 20 mm	IEC	362A
3 double-stacked busbars		
.37" x .75"	Domestic	564A
10 x 20 mm	IEC	564A

For technical information on E and F frame circuit breakers used as main and feeder breakers, see section 17

Thermal busbar currents, E-Cu, bare, at 35 °C ambient temperature in accordance with DIN 436711

Busbar dimensions	System	Thermal current at Busbar temperature 65 °C	85 °C	105 °C
mm	mm	A	A	A
12 x 5	40 + 60	188	248	295
15 x 5	40 + 60	222	293	349
20 x 5	60	274	362	430
25 x 5	60	327	432	513
30 x 5	60	379	500	595
12 x 10	40 + 60	302	398	474
20 x 10	60	427	564	670
30 x 10	60	573	756	900

onlinecomponents.com

Introduction

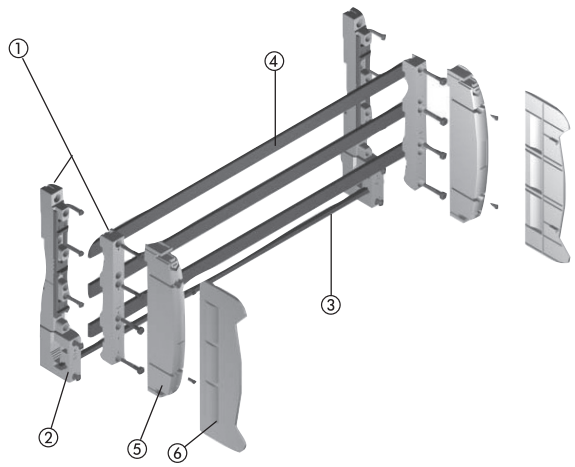

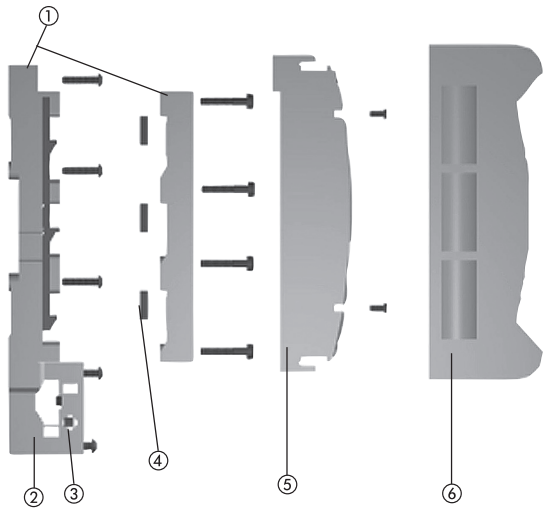

Fast Bus set-up

The Fast Bus system is designed to be easy to use and to save set up time.

8US Busbar holders

Because the 8US Busbar holders are adjustable, they can be used with a number of different busbar sizes allowing you to standardize on one style of busbar holder for busbars with a width and thickness of 12mm x 5mm up to 30mm x 10 mm thus providing a wide range of current carrying capability.

High *quality material*

Busbar supports and fuse bases are manufactured from glass-fiber reinforced, thermoplastic polyester with the color RAL 7035, light gray. The material ensures excellent mechanical, chemical and electrical properties. Furthermore, the material has an extremely low flammability and meets the requirements of UL 94 V0.

8WC Busbar and busbar systems

The most common size busbar for applications in the US is the 8WC5026 (20mm x 5mm), however there are other styles available depending on your application.

Busbar systems with 40 mm and 60 mm busbar center-to-center clearance have now become firmly established on the world market. In the US market the 60 mm busbar center-to-center clearance is the more commonly used system.

The permissible busbar temperature is a decisive factor when dimensioning the busbars. The busbar temperature is dependent on the current, the current distribution, the busbar cross-section, the busbar surface, the position of the busbar, the convection and the ambient temperature. The values stated in the table on page 5/3 can only be considered as reference values because the conditions vary with each location. The values are based on constant current over the whole busbar length.

The trend toward busbars proves most advantageous when the incoming supply is centrally located and the load is distributed symmetrically on both sides.

Simple Fast Bus system

The two illustrations above show the very basic items needed when setting up a Fastbus system.

① 8US1 Busbar holder *(5/10)*

② 5SH3 Ground busbar support *(shown attached however can be mounted separately 5/10)*

③ Ground busbar 6mm x 6mm

④ 8WC Busbar *(8WC5026 shown 5/10)* FBB36, FBB60 Busbar (5/7)

⑤ 5SH3532 profile holder (Holds top partition slotted 5SH3531/ non-slotted 5SH3528, and end cover 5SH3533)

⑥ End cover 5SH3533 5/9

Short-circuit strength

The short-circuit strength of the busbar system is dependent on the clearance of the busbar holders and on the busbar cross-section.

The short-circuit strength of the whole system is dependent on the short-circuit strength of the busbars and of the adapters with circuit protection.

Applications

The 8US Fast Bus distribution system is ideal for control panel builders with multiple motor applications. These applications are most common in the material handling, automotive, food processing, pharmaceutical and paper processing industries.

onlinecomponents.com
THE ONLINE DISTRIBUTOR OF ELECTRONIC COMPONENTS

Fast Bus combination starters and group installation assemblies

Ratings for Group Installations per NEC 430-53

Group Installation is an approach to building multiple motor control systems in accordance with Section 430-53 of the National Electrical Code. In Group installation, multiple motor starters can be grouped under one short circuit protective device. The 3RV MSP's have been UL listed for use in Group Installations both with and without 3RT contactors when mounted on the Fast Bus system. A 3RT contactor is added when remote operation of the motor is required.

Standard Installation, NEC 430-52

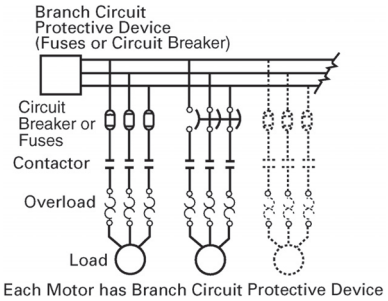

Each Motor has Branch Circuit Protective Device

Group Installation, NEC 430-53

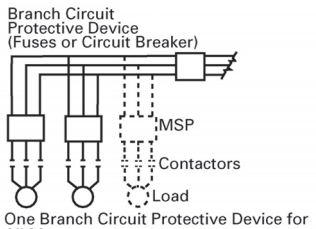

One Branch Circuit Protective Device for All Motors

MSP Type	Through FLA range Amps	Maximum rating of Group Branch Circuit Protective Device		Short Circuit Current Ratings	
		Fuse	Circuit Breaker	480V	575V
3RV101	0, 11-12	The main fuse should be selected based on the FUSE selection procedure listed below.	The main CB should be selected based on the CIRCUIT BREAKER selection procedure listed below.	65kA	10kA
3RV102	0, 11-12.5			65kA	30kA
3RV102	11-25			65kA	10kA
3RV103	11-50			65kA	30kA
3RV104	28-100			65kA	30kA

The selection of components for Group Installation is a simple process of the following three steps:

1. Selection of the Branch Circuit Protective Device, fuse or circuit breaker.
2. Selection of the Motor Starter protector based on the motor Full Load Amps.
3. Selection of the 3RT contactor based on the HP and voltage rating of the motor.

Circuit Breaker Selection

Select a circuit breaker (CB) between:
Minimum CB size (per NEC430-110): Sum of all motor FLC (per NEC table 430-150) x115%.
Maximum CB size (per NEC430-53c): 250% x FLC of the largest motor + FLC of all other motors.

Fuse Selection

Calculate the maximum fuse size per NEC430-53c.
Max Fuse Size =175% x FLC of largest motor + FLC of all other motors (FLC's from NEC table 430-150).

MSP Type	Through FLA range Amps	Short Circuit Current Ratings (Type E) [1]		
		240V	480Y/277V	600Y/347V
3RV102	0, 11-22	65kA	65kA	30kA
3RV103	11-50	65kA	65kA	25kA
3RV104	28-100	65kA	65kA	30kA (up to 75A)

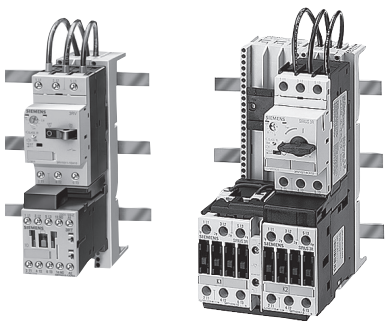

[1]) MSP sizes S0 and S3 require additional terminal kits for type E applications. See section 1

onlinecomponents.com

60 mm system

Selection and ordering data

for sharp-edged copper busbars to DIN 46 433, width 12 mm to 30 mm, thickness 5 mm and 10 mm	Busbar adapters	Number of mounting rails (35 mm)	Rated current A	Connecting leads AWG	Adapter length mm	Adapter width mm	Rated voltage V	Order No.	List Price $	Standard Package Quantity
	For SIRIUS devices									
Direct feeder	**Size S00/S0**									
	MSP	1	25	12	182	45	690	**8US12 51-5DM07**	**39.00**	
	Contactor + overload relay	–	–	–	–	–	–			
	Direct feeder	–	–	–	–	–	–			
	Reversing feeder adapter	–	–	–	–	–	–			
	+ switching device holder	1	–	–	182	45	–	**+ 8US12 50-5AM00**	**40.00**	
	+ connection keys (2 units needed for attachment) (packg. with 100 units)	–	–	–	–	–	–	**+ 8US19 98-1AA00**	**1.05 ea.**	100
	Size S00 – Cage Clamp									
	Direct feeder	1	12.5	14	182	45	690	**8US12 51-5CM47**	**39.00**	
	Size S2									
	MSP	–	56	8	182	55	690	**8US12 61-5FM08**	**54.00**	
	Contactor + overload relay	–	–	–	–	–	–			
Reversing feeder	Direct feeder	1	56	8	242	55	690	**8US12 61-5FP08**	**56.00**	
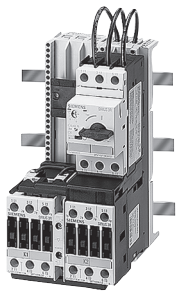	Reversing feeder adapter	1	56	8	242	55	690			
	+ switching device holder [1]	–	–	–	242	55	–	**+ 8US12 60-5AP00**	**35.00**	
	+ connection keys (2 units needed for attachment) (packg. with 100 units)	–	–	–	–	–	–	**+ 8US19 98-1AA00**	**1.05 ea.**	100
	Size S3									
	MSP	–	100	Busbars	182	70	to 460 [2]	**8US11 11-4SM00**	**102.00**	
	MSP	–	80 [4]	4	182	72	480 ... 690 [3]	**8US12 11-4TM00**	**91.00**	
	For ED and FD circuit-breakers									
	For E or F frame circuit breakers (includes mounting plate)	–	250	4-2/0	270	108	600	**FBS250108**	**282.00**	
	For E or F frame circuit breakers (includes mounting plate) terminals on the bottom of the shoe	–	250	4-2/0	270	108	600	**FBS250108M**	**282.00**	
8US12 50–5RM07	**Busbar adapters with supply terminals (at top) for any arrangement of components**									
	1.5 mm² up to 4 mm²	1	25	–	182	45	690	**8US12 50-5RM07**	**32.00**	
8US12 60–5AM00	**Switching device holders for lateral attachment to busbar adapter of the same length**									
	Switching device holder	1	–	–	182	45	–	**8US12 50-5AM00**	**40.00**	
	Switching device holder	1	–	–	182	55	–	**8US12 60-5AM00**	**42.00**	
	Switching device holder	–	–	–	242	55	–	**8US12 60-5AP00**	**45.00**	
	Connection keys (2 units needed for attachment) (packg. with 100 units)	–	–	–	–	–	–	**8US19 98-1AA00**	**1.05 ea.**	100
	Lateral modules for extending busbar adapters and switching device holders of the same length									
	Lateral module	–	–	–	182	13,5	–	**8US19 98-2BM00**	**12.00**	

Cross Reference

Function	MLFB	MLFB
Adapter shoe w/wire for SIRIUS S00 and S0	FBS2545	8US1251-5DM07
Adapter shoe w/wire for SIRIUS S2	FBS5055	8US1261-5FM08
Adapter shoe w/wire for SIRIUS S2 combos	FBS5055L	8US1261-5FP08
Adapter shoe for SIRIUS S3	FBS10070	8US1111-4SM00
Adapter shoe w/o wire for SIRIUS S00 and S0	FBS0045	8US1250-5AM00
Adapter shoe w/o wire for SIRIUS S2	FBS0055	8US1260-5AM00
Adapter shoe w/o wire for SIRIUS S2 combos	FBS0055L	8US1250-5AP00

1) Spacer and fixing screws for reverse contactor are included in the scope of supply.
2) ≤ 400 V max. 50 kA, 400 V to 460 V max. 25 kA.
3) 480 V to 525 V max. 30 kA, 525 V to 690 V max. 12 kA.
4) 80 A UL 100 A IEC

Discount Code: Fast Bus

Busbar kits

	Description	Order No.	List Price $
FBB36 	① **Copper Busbar** FBB36 includes: Qty. (3) 36 inches long x 5mm x 20mm Tinned Copper Busbar FBB60 includes: Qty. (3) 60 inch long x5mm x 20mm TInned Copper Busbar Qty. (1) FBSXP - Intermediate support kit	**FBB36** **FBB60**	**118.00** **226.00**
FBS400 	**Busbar Support Kit** End Support Kit - FBS400 includes: Qty.(2) - 5SH3533 End Covers Qty.(2) - 5SH3532 Holder for Edge Profile and End Covers Qty.(2) - 8US1923-2AA01 3Pole Busbar holder with Outside Fixing	**FBS400**	**93.00**
	Ground Busbar and Support Kit (not shown) FBG36 Includes: Qty.(2) - 5SH3506 - Ground Busbar Holders Qty.(1) - 36 inch long x 6mm x 6mm Busbar (135A) FBG60 Includes: Qty.(2) - 5SH3506 - Ground Busbar Holders Qty.(1) - 60 inch long x 6mm x 6mm Copper Busbar (135A)	**FBG36** **FBG60**	**120.00** **168.00**
	Intermediate Support and Cover FBSXP - Intermediate support kit includes: Qty.(1) 8US1923-2AA01 Busbar holder with Outside Fixing Qty.(1) 5SH3532 Holder for Edge Profile and End Covers	**FBSXP**	**37.00**
	Power Take-Off Support and Cover Rated 80 ams; wire size 16-6 AWG	**FBSPT080**	**44.00**

Selection and ordering data

FBCB Fast Bus circuit breakers
- Offer a full range of circuit breakers from 15A to 250A pre-assembled on 60mm fast-bus adapter shoes and ready to place on the busbar.

Also a full range of main circuit breakers from 100A to 250A come in pre-packaged kits that include the circuit breaker, fastbus adapter with mounting plate and mounting hardware.

	Design	Breaker frame	Order No.	List Price $
Circuit breakers				
FBCB030 	**Feeder 3 pole/600V with Fast Bus "snap on" adapter shoes (wires from shoe to breaker on top side)**			
	15 amp	ED	**FBCB015**	**360.00**
	20 amp	ED	**FBCB020**	**360.00**
	25 amp	ED	**FBCB025**	**360.00**
	30 amp	ED	**FBCB030**	**360.00**
	35 amp	ED	**FBCB035**	**360.00**
	40 amp	ED	**FBCB040**	**360.00**
	45 amp	ED	**FBCB045**	**360.00**
	50 amp	ED	**FBCB050**	**360.00**
	60 amp	ED	**FBCB060**	**360.00**
	70 amp	ED	**FBCB070**	**449.00**
	80 amp	ED	**FBCB080**	**449.00**
Feeder circuit breakers				
FBCB100 	**3 pole/600V with bolt on shoes (wires from shoe to breaker on top side)**			
	100 amp	ED	**FBCB100**	**526.00**
	125 amp	ED	**FBCB125**	**1271.00**
	150 amp	FXD	**FBCB150**	**1283.00**
	175 amp	FXD	**FBCB175**	**1335.00**
	200 amp	FXD	**FBCB200**	**1335.00**
	225 amp	FXD	**FBCB225**	**1335.00**
	250 amp	FXD	**FBCB250**	**2093.00**
Main circuit breakers				
FBCB250M 	**3 pole/600V with bolt on shoes (wires from shoe to breaker on bottom side)**			
	100 amp	ED	**FBCB100M**	**526.00**
	125 amp	ED	**FBCB125M**	**1271.00**
	150 amp	FXD	**FBCB150M**	**1283.00**
	175 amp	FXD	**FBCB175M**	**1335.00**
	200 amp	FXD	**FBCB200M**	**1335.00**
	225 amp	FXD	**FBCB225M**	**1335.00**
	250 amp	FXD	**FBCB250M**	**2093.00**

① UL recognized to nominal rating of 362 Amps.

8US and Fast Bus Busbar Adapter System

onlinecomponents.com

Adapter shoes and accessories

Illustration	Adapter Shoes Provide mechanical mounting and electrical power connection to busbar system.	Width	Length	For use with Device Type	Catalog No	List Price $
 FBS2545	With wire: 25 amp rated (12AWG)	45 mm	182 mm	3RV101, 3RV102	**FBS2545**	**39.00**
	With wire: 50 amp rated	55 mm	185 mm	3RV103	**FBS5055**	**54.00**
		55 mm	242 mm		**FBS5055L**	**56.00**
	With terminals for wire size #10–#6: 80 amp rated	72 mm	182 mm	FBCB15-80	**FBS8072**	**77.00**
	With wire: 100 amp rated	70 mm	182 mm	3RV104	**FBS10070**	**102.00**
 FBS0045	With terminals for wire #4–2/0 Includes mounting plate for mounting E or F frame breakers Rated 250 amps (terminals on top of shoe)	108 mm	270 mm	FBCB	**FBS250108**	**282.00**
	With terminals for wire #4–2/0 Includes mounting plate for mounting E or F frame breakers Rated 250 amps (terminals on bottom of shoe)	108 mm	270 mm	FBCB	**FBS250108M**	**282.00**
	Without wire: For mechanical mounting only Contactor Support	45 mm	182mm	3RV101	**FBS0045**	**40.00**
		55 mm	185 mm	3RV102	**FBS0055**	**42.00**
		55 mm	242 mm	3RV103	**FBS0055L**	**56.00**
 8US1998–2BM00	**Support Bracket for 3RT104 Contactor** For use with FBS10070	70 mm	—	3RT104	**FBS0070B**	**23.00**
	Side module for Adaptor Shoe expansion	10 mm	182 mm	—	**8US1998-2BM00**	**12.00**
	Feeder Breaker Mounting Plate For mounting 3-pole E-frame Siemens circuit breakers through 80 amps. Mounts to FBS8072 Adaptor Shoe.	72 mm	160 mm	FBCB15-80	**FBP80**	**49.00**
 FBC20	**Fast Clips** For fastening 2 or more shoes together. 2 required per pair of shoes. .	—	—	—	**FBC20**	**9.00** Pack of 20
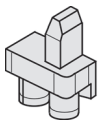 8US1998-1BA00	**Spacer** For supporting a 3RT101 or 3RT102 contactor to a Fastbus shoe when used with a 3RV MSP. 1 required per contactor.	—	—	—	**8US1998-1BA00**	**.78 ea.** Standard pkg quantity = 100

Cross Reference

Function	MLFB	MLFB
Adapter shoe w/wire for SIRIUS S00 and S0	FBS2545	8US1251-5DM07
Adapter shoe w/wire for SIRIUS S2	FBS5055	8US1261-5FM08
Adapter shoe w/wire for SIRIUS S2 combos	FBS5055L	8US1261-5FP08
Adapter shoe for SIRIUS S3	FBS10070	8US1111-4SM00
Adapter shoe w/o wire for SIRIUS S00 and S0	FBS0045	8US1250-5AM00
Adapter shoe w/o wire for SIRIUS S2	FBS0055	8US1260-5AM00
Adapter shoe w/o wire for SIRIUS S2 combos	FBS0055L	8US1250-5AP00

onlinecomponents.com
THE ONLINE DISTRIBUTOR OF ELECTRONIC COMPONENTS

Selection and ordering data

for sharp-edged copper busbars to DIN 46 433, width 12 mm to 30 mm, thickness 5 mm and 10 mm

① Holder for end cover and edge profile
② Base
③ Edge profile
④ Holder for the spare panel cover
⑤ End cover
⑥ Spare panel cover
⑦ Busbar holder,3-phase
⑧ Ground busbar holder

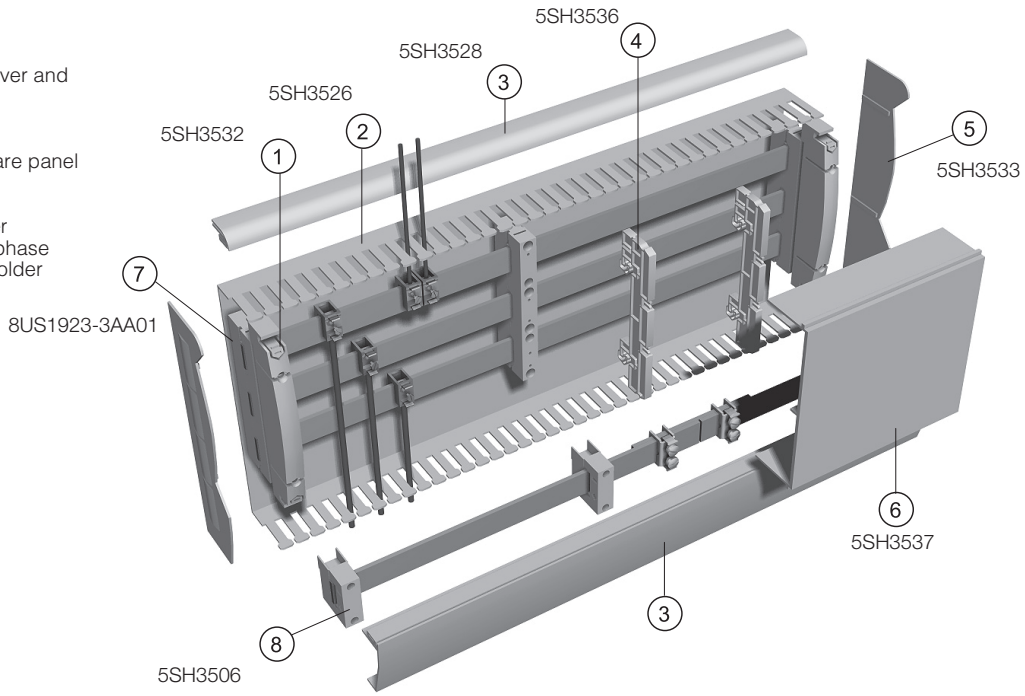

	Description			Order No.	List Price $	Pack Units
	Busbar holders ⑦					
	with outside fixing (3-pole)	L1–L3	[1]	**8US19 23-2AA01**	**46.00**	
	with inside fixing (3-pole)	L1–L3		**8US19 23-3AA01**	**41.00**	
	with inside fixing (4-pole)	L1–L3 + PE/N		**8US19 23-4AA00**	**59.00**	
	Endcover for 3-pole busbar holders and 4-pole busbar holders ⑤					
5SH3 534	3 pole endcover for use with 5SH3532	229 mm high		**5SH3533**	**12.80**	
	4 pole endcover for use with 5SH3532	289 mm high		**5SH3534**	**30.50**	
	Partition profile					
	slotted	2 000 mm long	[1]	**8US19 22-1EA00**	**236.00**	
	closed	2 000 mm long		**8US19 22-1FA00**	**139.00**	
	Base ②					
	3-pole system	1 100 mm long	230 mm in width	**5SH3 526**	**155.00**	
	4-pole system	1 100 mm long	290 mm in width	**5SH3 527**	**163.00**	
	(or 3-pole system with wiring duct)					
	Holder for edge profile and partiion profile ①					
5SH3 532	for 5SH3 528 and 5SH3 530			**5SH3 532**	**23.00**	
	Edge profile ③					
5SH3 528	not slotted	1 100 mm long	17 mm × 36 mm	**5SH3 528**	**68.00**	
		1 100 mm long	77 mm × 36 mm	**5SH3 530**	**136.00**	
5SH3 531	slotted	1100 mm long		**5SH3 531**	**119.00**	
	Spare panel cover holder (for spare panel cover) ④					
		32 mm deep	1000 mm long	**5SH3 536**	**25.00**	
	Spare panel cover ⑥					
	Mounting on spare panel holder 5SH3 523	1 000 mm long	202 mm in width	**5SH3 537**	**130.00**	
	Ground busbar holder ⑧					
				5SH3506	**18.00**	

1) Discount Code: Fast Bus

onlinecomponents.com

Accessories for 60 mm system

Selection and ordering data


8US19 23–.AA00


5SH3506

Description			Order No.	List Price $	Standard pkg qty
Busbar holders					
60 mm system					
End and intermediate holders for flat copper profiles 12 mm × 5 mm to 30 mm × 10 mm					
with outside fixing (3-pole)	L1–L3		**8US19 23-2AA01**	**46.00**	
with inside fixing (3-pole)	L1–L3		**8US19 23-3AA01**	**41.00**	
with inside fixing (4-pole)	L1–L3 + PE/N		**8US19 23-4AA00**	**59.00**	
Ground busbar holder for flat copper profiles 12 mm × 5 mm to 20 mm × 10 mm, also 25 mm × 5 mm and 30 mm × 5 mm					
Attachment to 8US19 23-2AA01 or independent installation		①	**5SH3 506**	**18.00**	
End covers for 60-mm busbar system (see p. 5/9) [1]					
for covering unterminated busbar ends					
for 8US19 23-2AA00 (3-pole)	L1–L3		**8US19 22-1AC00**	**14.10 ea.**	10
for 8US19 23-3AA00 (3-pole)	L1–L3		**8US19 22-1AC00**	**14.10 ea.**	10
for 8US19 23-4AA00 (4-pole)	L1–L3 + PE/N	(1 unit = 2 pieces)	**8US19 22-1AB00**	**32.00**	
Busbar copper (flat copper, approx. 2 m long, bare, to EN 12 167)					
6 mm × 6 mm			**8WC5 020**	**33.00**	
12 mm × 5 mm, common size for 40mm system			**8WC5 023**	**104.00**	
20 mm × 5 mm, common size for 60mm system			**8WC5 026**	**118.00**	
30 mm × 5 mm			**8WC5 033**	**220.00**	
20 mm × 10 mm			**8WC5 028**	**226.00**	
30 mm × 10 mm			**8WC5 034**	**256.00**	
Cover profiles for busbars					
12 mm × 5 mm, 12 mm x 10 mm	210 mm long		**8GS4 0200**	**16.00 ea.**	5
20 mm × 5 mm	1 000 mm long		**8US19 22-2AA00**	**35.50**	
25 mm × 5 mm	1 000 mm long		**8US19 22-2AA00**	**35.50**	
30 mm × 5 mm	1 000 mm long		**8US19 22-2AA00**	**35.50**	
20 mm × 10 mm	1 000 mm long		**8US19 22-2BA00**	**38.00**	
30 mm × 10 mm	1 000 mm long		**8US19 22-2BA00**	**38.00**	
20 - 30 mm × 5 mm	1 meter long		**FBC72**	**35.50 ea.**	3
Incoming supply terminals for 60 mm busbar system					
Terminal plate with cover (35 mm² to 120 mm², 3-pole)	200 mm long	84 mm wide	**8US19 21-1AA00**	**98.00**	
Connection module for 4-pole (PE/N) up to 16 mm must be attached to an adapter/switching device holder	242 mm long	18 mm wide	**8US12 00-0AA00**	**60.00**	

8GS40200


8US19 22–2A


8US19 21–1AA00

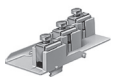
FBT250



Three Pole Lug Plate assembly with cover			
Wire Size	**Amp Rating**		
2-250 MCM	440 amps	**FBT250**	**98.00**
3/0-350 MCM	460 amps	**FBT350**	**193.00**
300-600 MCM	560 amps	**FBT600**	**205.00**

1) For masking unterminated busbar ends up to 5 mm busbar thickness (ground clearance at 10 mm busbar thickness: 17 mm).

Cross Reference Function	MLFB	MLFB
Incoming power terminal	FBT250	8US1921-1AA00

① Discount Code: Siemens AG

onlinecomponents.com
THE ONLINE DISTRIBUTOR OF ELECTRONIC COMPONENTS

Selection and ordering data

	Description		Conductor cross-section	Order No.	List Price $	Pack Units
8US19 21–2A.00 8US19 21–2B.00	**Terminals for round conductors (See below for cross reference information)**					
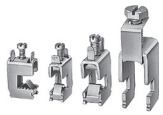	**5 mm busbar thickness** from 12 mm × 5 mm up to 30 mm × 5 mm		1.5 – 16 mm² 4 – 35 mm² 16 – 120 mm²	**8US19 21-2AA00** **8US19 21-2AB00** **8US19 21-2AC00**	**4.00 ea.** **5.10 ea.** **20.00 ea.**	100 50 50
	from 20 mm × 5 mm up to 30 mm × 5 mm		95 – 185 mm² 150 – 300 mm²	**8US19 41-2AA01** **8US19 41-2AA02**	**35.00 ea.** **45.00 ea.**	6 3
8US19 41–2AA0.	**10 mm busbar thickness** from 12 mm × 10 mm up to 30 mm × 10 mm		1.5 – 16 mm² 16 – 70 mm² 16 – 120 mm²	**8US19 21-2BA00** **8US19 21-2BD00** **8US19 21-2BC00**	**6.50 ea.** **15.00 ea.** **20.00 ea.**	100 50 50
	from 20 mm × 10 mm up to 30 mm × 10 mm		95 – 185 mm² 150 – 300 mm²	**8US19 41-2AA01** **8US19 41-2AA02**	**35.00 ea.** **45.00 ea.**	6 3
	Terminals for Single Busbars (See below for cross reference information)					
	AWG 16 – 6 12 – 2 6 – 2/0 6 – 250 MCM	**Amp Rating** 180 amps 270 amps 400 amps 440 amps		**FBT166-1** **FBT122-1** **FBT620-1** **FBT6250-1**	**4.34 ea.** **5.34 ea.** **15.34 ea.** **21.34 ea.**	3 3 3 3
	Terminals for Double Stack Busbars					
	AWG 16 – 6 12 – 2 6 – 2/0 6 – 250 MCM	**Amp Rating** 180 amps 270 amps 400 amps 440 amps		**FBT166-2** **FBT122-2** **FBT620-2** **FBT6250-2**	**6.67 ea.** **7.67 ea.** **15.34 ea.** **21.34 ea.**	3 3 3 3
	Terminals for Single or Double Stack Busbars (See below for cross reference information)					
	AWG 3/0 – 350 MCM 300 – 600 MCM	**Amp Rating** 460 amps 560 amps		**FBT30350** **FBT300600**	**35.00 ea.** **45.00 ea.**	3 3
8US19 22–1GA00	**Covering cap for supply terminals for round conductors (attachment to busbar)**					
	**60 mm system** for terminals up to 120 mm² for terminals up to 300 mm²	200 mm long 200 mm long	84 mm wide 270 mm wide	**8US19 22-1GA00** **8US19 22-1GA02**	**40.00** **85.00**	
	Terminal Covers (mount to busbars) for terminals up to 250 MCM for terminals up to 600 MCM			**FBC84** **FBC135**	**40.00** **85.00**	
	Supply terminals for cable lugs, copper bars or laminated copper bands					
	10 mm busbar thickness for cable lugs up to 240 mm² for 20 mm × 5 mm up to 30 mm × 10 mm	(bolts threaded M 10)		**8US19 41-2AC00** **8US19 41-2BB00**	**21.00** **20.00**	
	**Terminals** to fit wire gauge size #16-2 3 lugs per set with cover			**FBT162**	**58.00**	
FBT162	**Ground Terminals** for Ground Busbar	Connection for: 12 AWG 4 AWG 2 AWG		**8WA2860**[1] **8WA2868**[1] **8WA2870**[1]	**0.40** **1.25** **1.50**	

Cross Reference Numbers

FBT166-1	16-6 AWG	180 A =	**8US19 21-2AA00**	1.5 – 16 mm²
FBT122-1	12-2 AWG	270 A =	**8US19 21-2AB00**	4.0 – 35 mm²
FBT6250-1	6-250 MCM	440 A =	**8US19 21-2AC00**	16.0 – 120 mm²
FBT620-1	6-2/0 AWG	400 A =	**8US19 21-2AD00**	16.0 – 70 mm²
FBT30350	3/0-350 MCM	460 A =	**8US19 41-2AA01**	95.0 – 185 mm²
FBT300600	300-600 MCM	560 A =	**8US19 41-2AA02**	150.0 – 300 mm²
FBC84	Cover 84 mm wide	=	**8US19 22-1GA00**	
FBC135	Cover 135 mm wide Cover 270 mm wide	=	**8US19 22-1GA02**	

1) Discount Code: Terminal Blocks

onlinecomponents.com

Accessories for 60 mm system

Selection and ordering data

	Description		Conductor cross-section		Order No.	List Price $	Pack Units
	Extension and connection terminals						
	for 2 abutting busbars[1])	12 mm × 5 mm	(1 set = 2 units)	①	**8JK3 201**	**16.00 ea.**	**Std. Pkg Qty=10**
	Accessories for busbar adapters and switching device holders						
8US19 98–4AA00 	**Mounting rail (35 mm) – plastic** complete with fixing screws		45 mm wide 55 mm wide 70 mm wide 110 mm wide		**8US19 98-7CA15** **8US19 98-7CA16** **8US19 98-4AA00** **8US19 98-7CA10**	**4.00 ea.** **5.00 ea.** **6.20 ea.** **10.00 ea.**	**Std. Pkg Qty=10** **Std. Pkg Qty=10** **Std. Pkg Qty=10** **Std. Pkg Qty=10**
8US19 98–3AA00 	**Connection holder** **(for vertical busbar assembly)** fixes the circuit-breaker to the mounting rail[2]) (for SIRIUS size S00/S0)				**8US19 98-1DA00**	**2.45 ea.**	**Std. Pkg Qty=20**
	Screw holder for supplementary screw fixing of the feeder (for SIRIUS size S00/S0)				**8US19 98-1CA00**	**5.50 ea.**	**Std. Pkg Qty=20**
	Spacer fixes the feeder to the busbar adapter (for SIRIUS size S00/S0)				**8US19 98-1BA00**	**0.78 ea.**	**Std. Pkg Qty=20**
	Connection keys for mechanical linking of adapters and switching device holders (2 units per combination)				**8US19 98-1AA00**	**1.05 ea.**	**Std. Pkg Qty=100**
8US19 98–8AA10 	**Outgoing terminal rail for busbar adapter**						
	Plug-type terminal **(complete with supporting element for attachment to busbar adapter and switching device holder)**						
	3 × 2.5 mm² (400 V) and 4 × 1.5 mm² (250 V)	91 mm long	45 mm wide		**8US19 98-8AM07**	**35.00 ea.**	
	7 × 2.5 mm² (400 V)	91 mm long	54 mm wide		**8US19 98-8AA10**	**98.00 ea.**	

1) Terminal bar must be made up in-house.
2) For 45 mm and 55 mm mounting rail.

① Discount Code: Siemens AG

Dimension drawings

8US10 51–5DK07

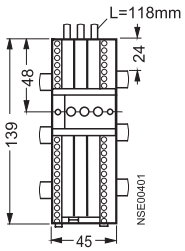

8US10 61–5FK08

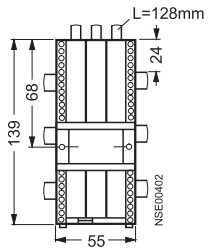

8US10 51–5DM07

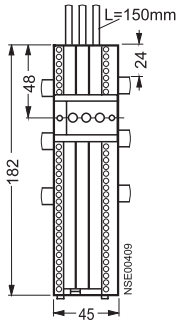

8US10 61–5FM08

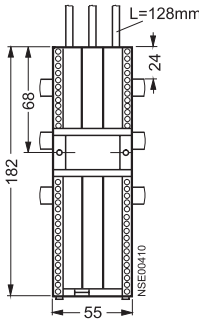

8US19 98–2BK00

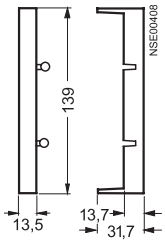

8US10 61–5NA00,
8US10 61–6NA00

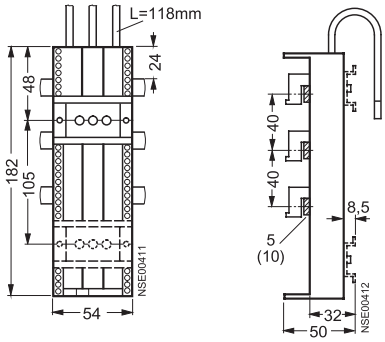

8US10 61–5FP08

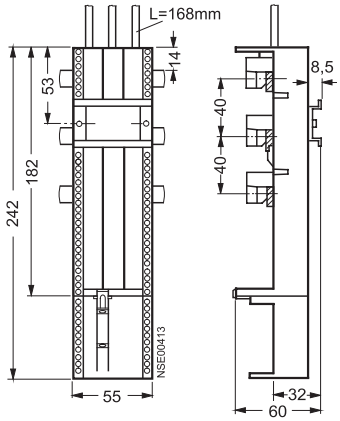

8US19 98–2BM00

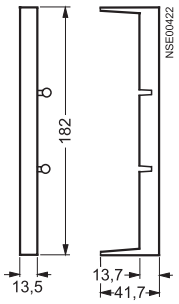

8US10 51–5CM47

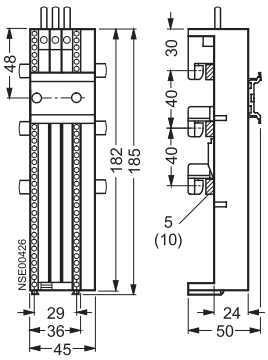

8US10 51–5DJ07

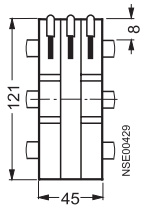

8US10 61–5DJ07

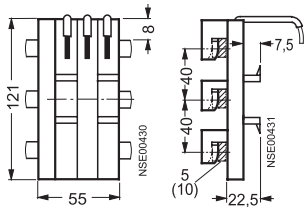

onlinecomponents.com

60 mm system

Dimension drawings

8US19 23–2AA00

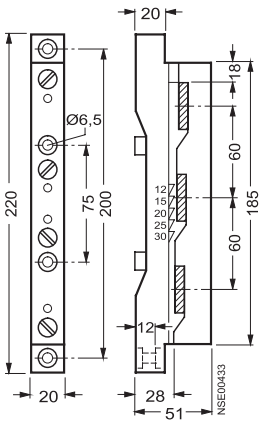

8US19 23–3AA00

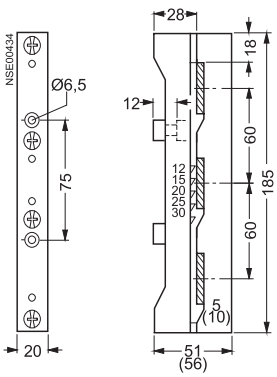

FBCB150, FBCB200, FBCB225, FBCB250

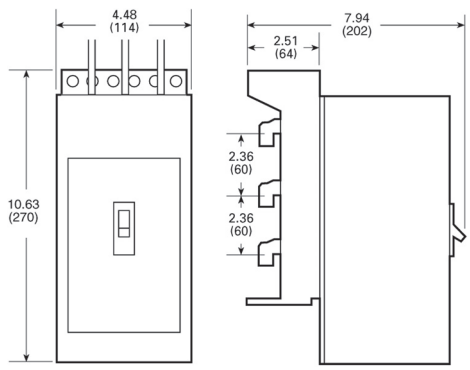

8US19 23–4AA00

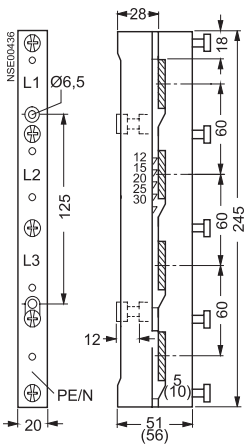

8US19 22–1AC00 with 8US19 23–3AA00

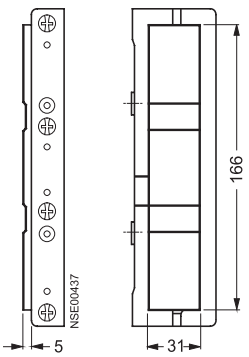

FBCB100, FBCB125

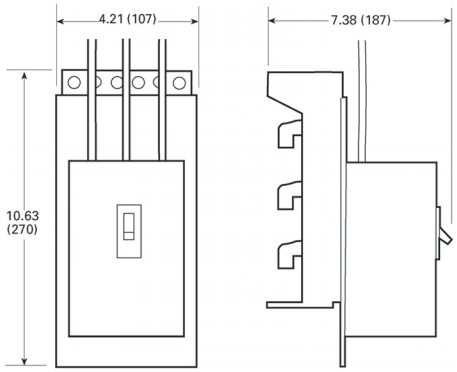

5SH3 506

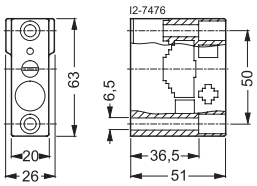

8US19 22–1EA00

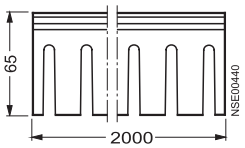

8US19 22–1FA00

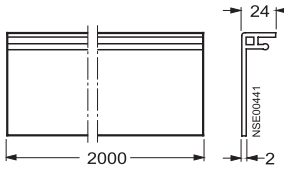

8US12 51–5DM07

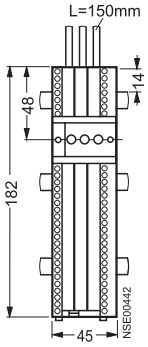

8US12 61–5FM08

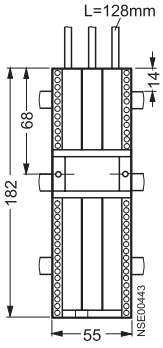

8US12 61–5NA00
8US12 61–6NA00

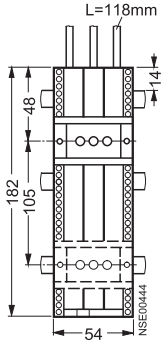

8US12 11–5NE00
8US12 71–2NA20
8US12 71–6MA20

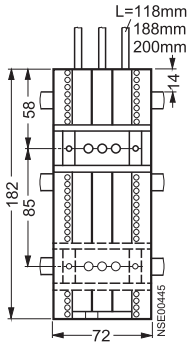

8US12 81–6NA00

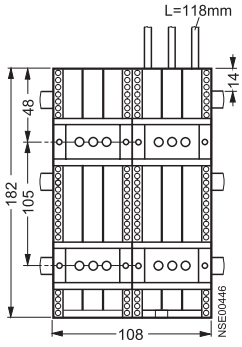

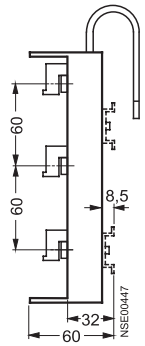

onlinecomponents.com
THE ONLINE DISTRIBUTOR OF ELECTRONIC COMPONENTS

Dimension drawings

8US11 11–4SM00

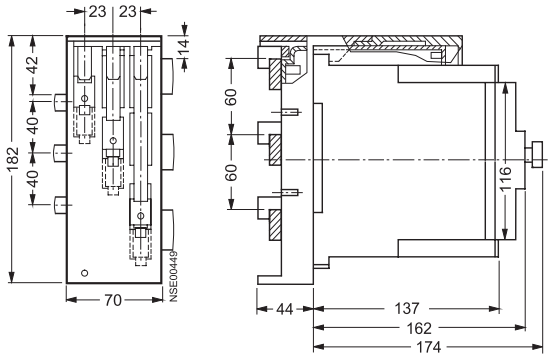

8US12 50–5AM00

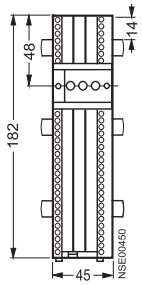

8US12 60–5AM00

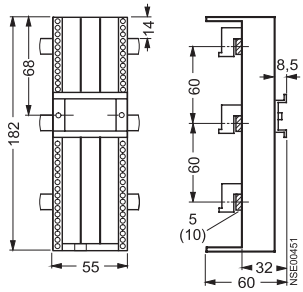

8US12 60–5AP00
8US12 61–5FP08

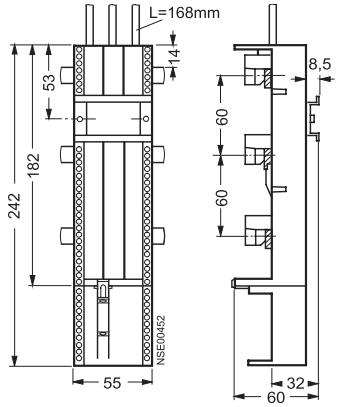

8US12 00–0AA00

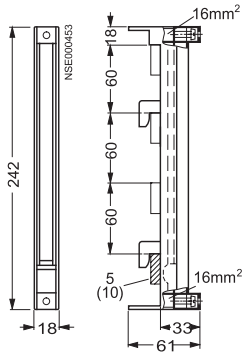

8US19 22–1AB00

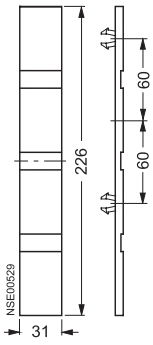

[1])

8US12 51–5CM47

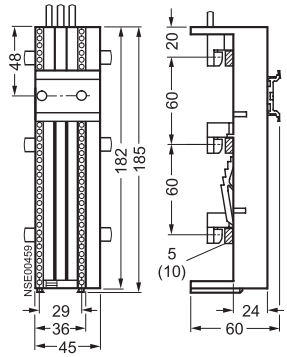

8US12 50–5RM07

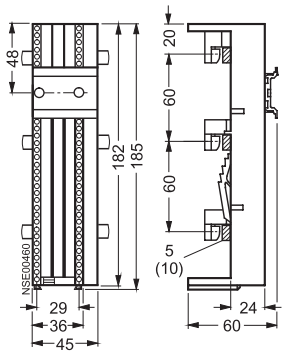

onlinecomponents.com

Accessories for 40 mm and 60 mm system

Dimension drawings

8US19 22–2AA00
8US19 22–2BA00

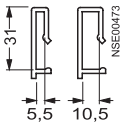

8GR5 010

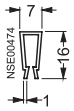

8US19 98–8AM07

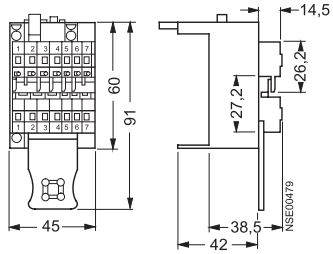

8US19 22–1CA00

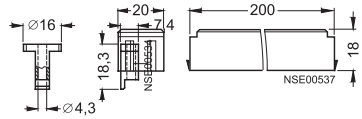

8US19 98–7CA15

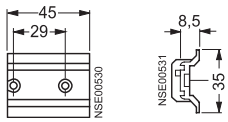

8US19 98–7CA16

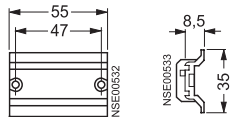

8US19 98–7CA10

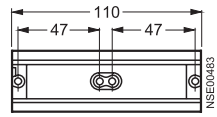

8US19 98–1BA00

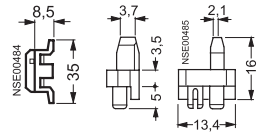

8US19 22–1GA00

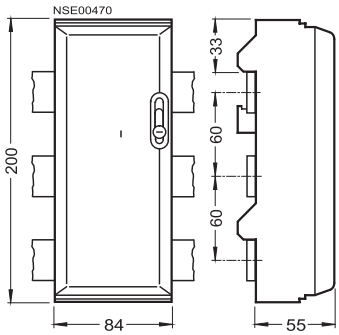

8US19 22–1GA00

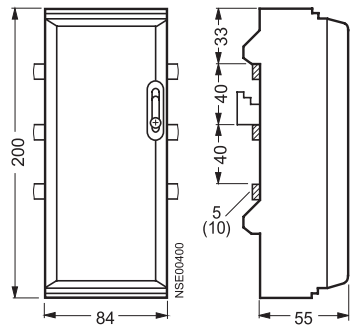

8US19 03–5AA00

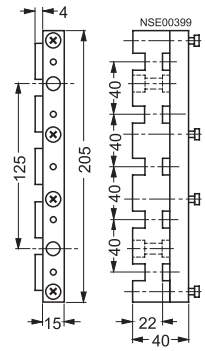

Holder for edge profile

5SH3 532

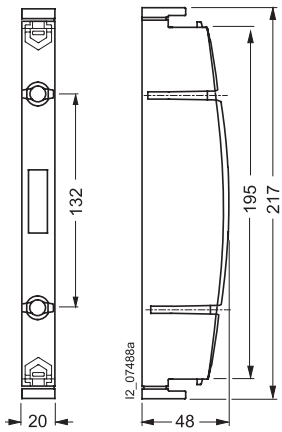

Spare panel holder

5SH3 523

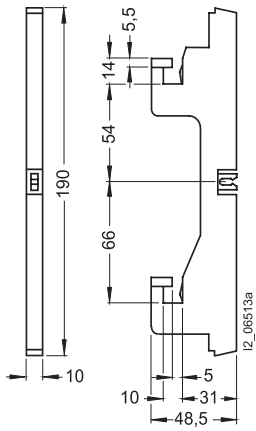

Edge profile

5SH3 528, 5SH3 530

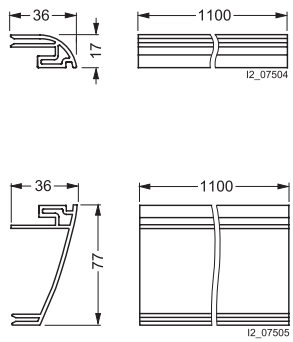

Spare panel cover

5SH3 525

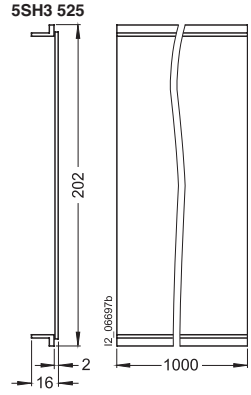

Dimension drawings

8US19 21–2..00

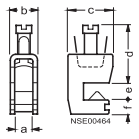

Type	a	b	c	d	e	f
8US19 21–2AA00	7.5	11,5	22,5	25	5	10
–2AB00	10,5	15,5	29	35	5	10
–2AC00	17	23,5	36	55	5	12
–2AD00	14,5	20,5	32	42	5	12
8US19 21–2BA00	7.5	11,5	22,5	25	10	10
–2BB00	10,5	15,5	29	35	10	10
–2BC00	17	23,5	36	55	10	12
–2BD00	14,5	20,5	32	42	10	12

8US19 41–2AC00

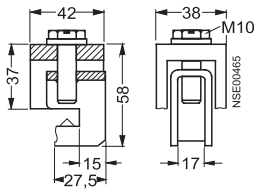

8US19 41–2AA01
8US19 41–2BB00

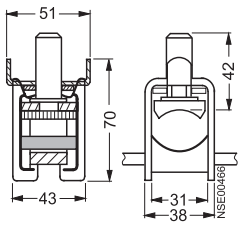

8US19 41–2AA02

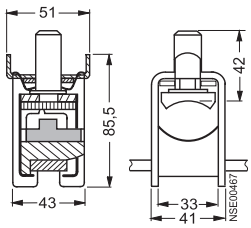

8US19 41–2BA00

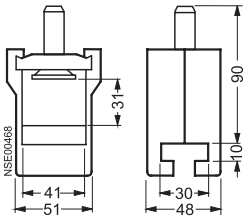

8US19 41–2BF00

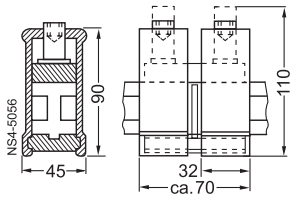

8US19 22–1GA00

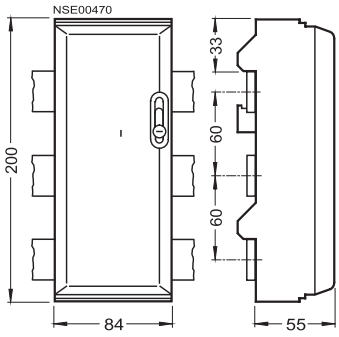

8US19 21–1AA00

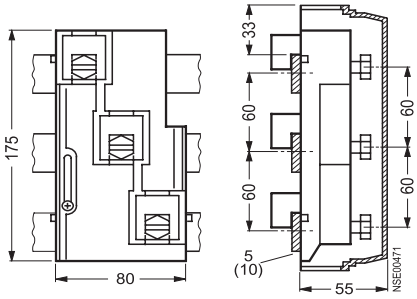

8US19 22–1GA02

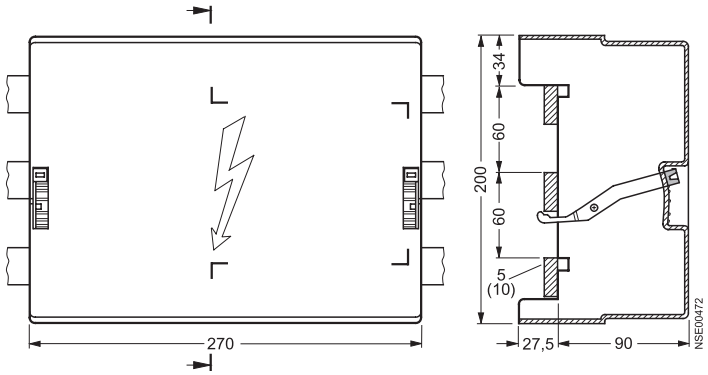

onlinecomponents.com

Dimensions

FBB36/FBB60
Copper Busbar

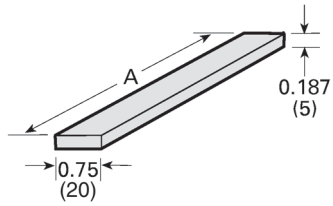

Dimension	A
FBB36	36 (914)
FBB60	60 (1524)

FBS400 or FBSXP
Busbar Support Kit

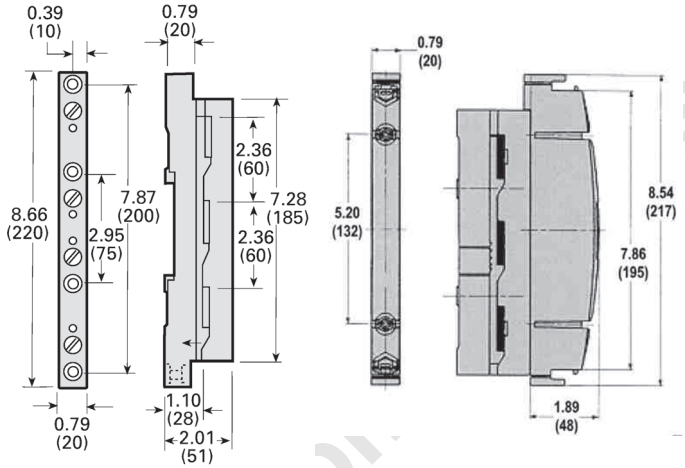

FBIC

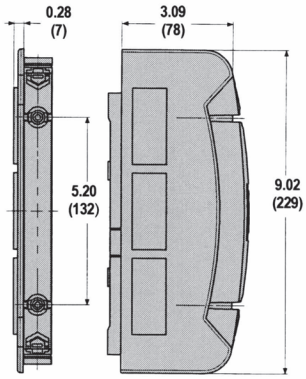

FBT250
Three-Pole Lug Plate
(uses same cover as 8US1922–1GA00)

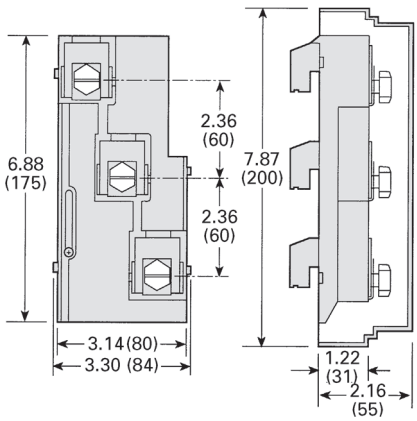

FBT162/FBC84
Terminals and Cover

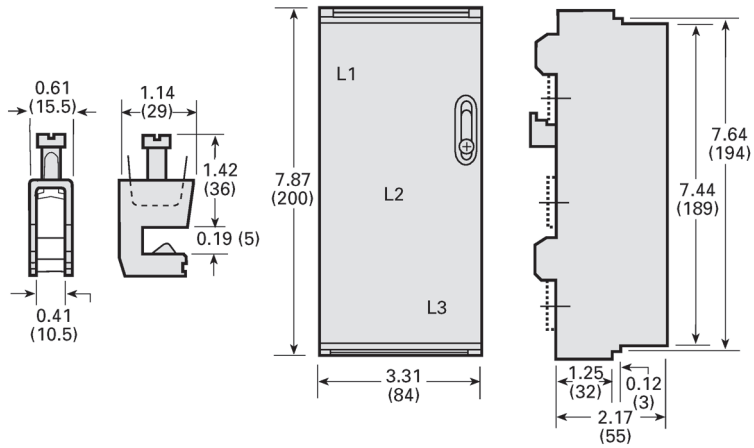

All dimensions shown in inches (millimeters). For reference purposes only. Not to be used for design or construction purposes.

Type	a	b	c	d	e	f
FBT166–1	7.5	11.5	22.5	25	5	10
FBT122–1	10.5	15.5	29	35	5	10
FBT6250–1	17	23.5	36	55	5	12
FBT620–1	14.5	20.5	32	42	5	12
FBT166–2	7.5	11.5	22.5	25	10	10
FBT122–2	10.5	15.5	29	35	10	10
FBT6250–2	17	23.5	36	55	10	12
FBT620–2	14.5	20.5	32	42	10	12

FBT30350

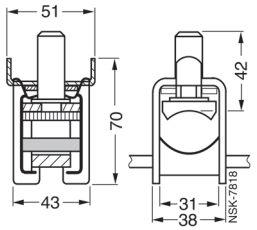

FBT

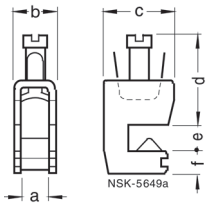

FBT300600

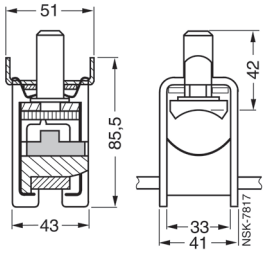

FBT350/FBT600
(Uses same cover as FBC135)

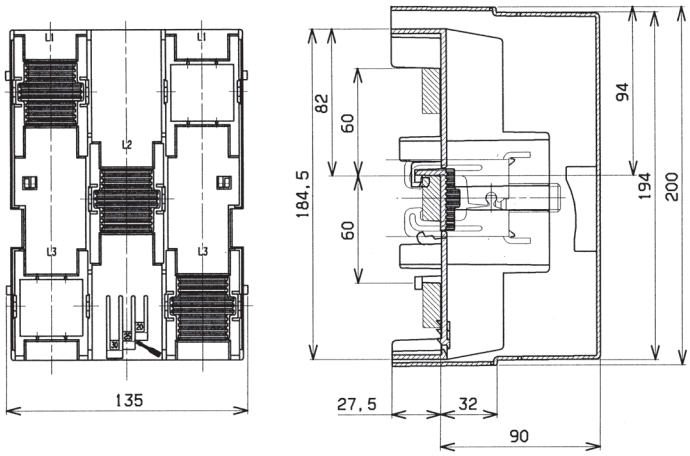

FBC135

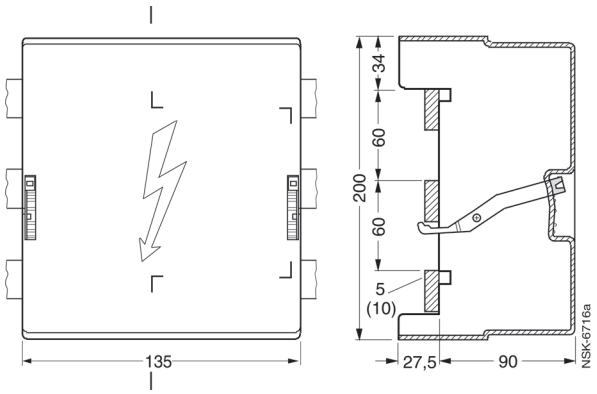

All dimensions shown in millimeters. For reference purposes only. Not to be used for design or construction purposes.

onlinecomponents.com

Selection

Required Components for Fast Bus Mounting

3RV101 with **3RT101**

Adapter Shoe
FBS2545

MSP
3RV101

Link Module
3RA1911-1A

Contactor
3RT101

Spacer for Contactor
8US1998-1BA00

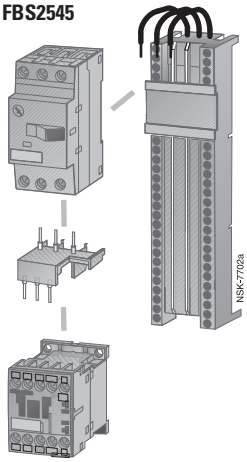

3RV102 with **3RT101**

Adapter Shoe
FBS2545

MSP
3RV102

Link Module
3RA1921-1D

Contactor
3RT101

Spacer for Contactor
8US1998-1BA00

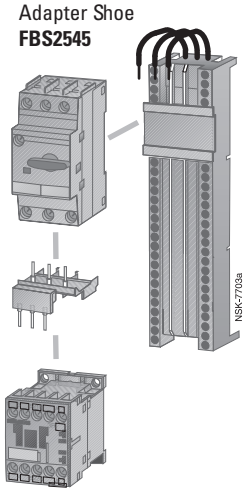

3RV102 with **3RT102**

Adapter Shoe
FBS2545

MSP
3RV102

Link Module
for AC: **3RA1921-1A**
for DC: **3RA1921-1B**

Contactor
3RT102

Spacer for Contactor
8US1998-1BA00

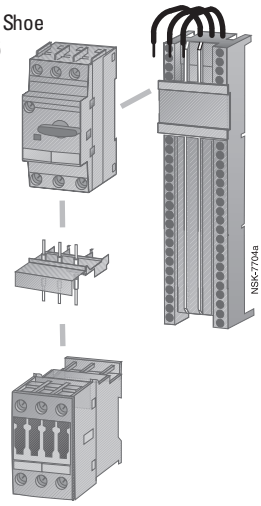

3RV103 with **3RT103**

Adapter Shoe
FBS5055L

MSP
3RV103

Link Module
for AC: **3RA1931-1A**
for DC: **3RA1931-1B**

Contactor
3RT103

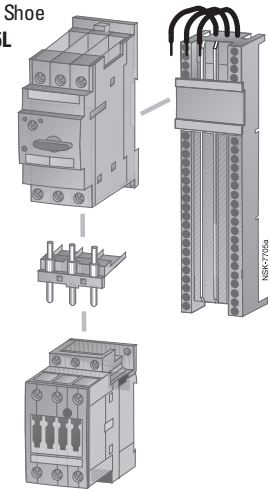

3RV104 with **3RT104**

Adapter Shoe
FBS10070

MSP
3RV104

Link Module
for AC: **3RA1941-1A**
for DC: **3RA1941-1B**

Contactor
3RT104

Bracket
FBS0070B

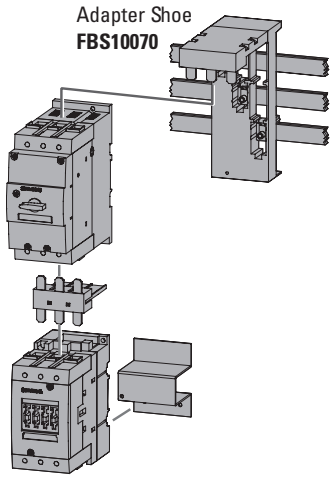

Required Components for Fast Bus Mounting

3RV101 with Reversing **3RT101**

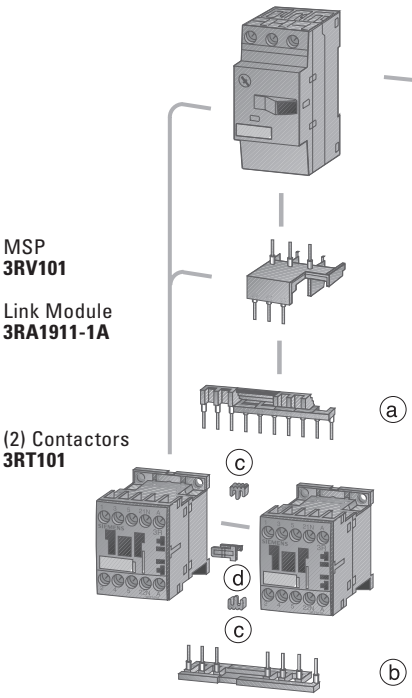

3RA1913-2A
Wiring Kit
ⓐ Upper Wiring Module
ⓑ Lower Wiring Module
ⓒ 2 Connecting Clips
ⓓ Mechanical Interlock

3RV102 with Reversing **3RT101**

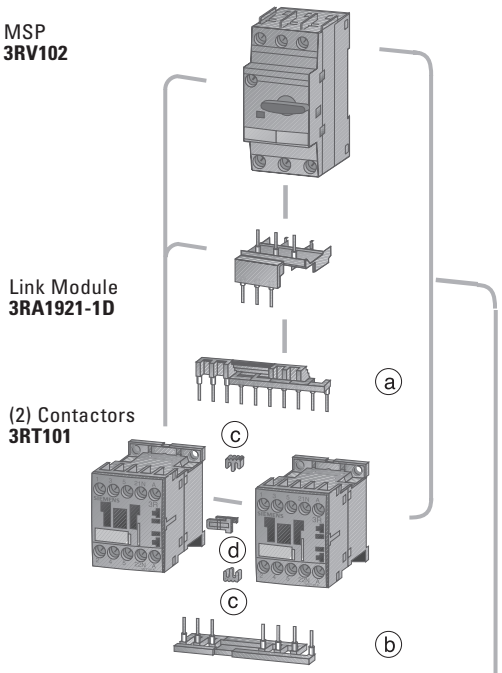

3RV102 with Reversing **3RT102**

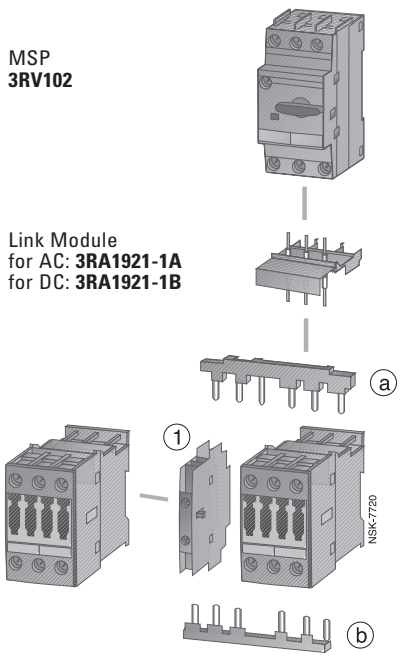

3RA1923-2A
Wiring Kit
ⓐ Upper Wiring Module
ⓑ Lower Wiring Module

Contactor Support
for **3RT101**:
FBS0045
Contactor Support
for **3RT102**:
FBS0055

Adapter Shoe
FBS2545

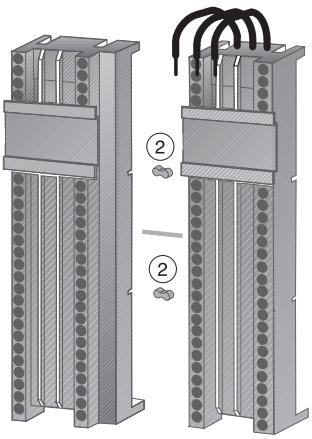

① **3RA1924-2B**
Mechanical Interlock
② **FBC20**
Fast Clips
③ **8US1998 - 1BA00**
Spacers for Contactors
1 Required per Contactor

onlinecomponents.com

Selection

Required Components for Fast Bus Mounting

3RV103 with Reversing **3RT103**

① Link Module
for AC: **3RA1931-1A**
for DC: **3RA1931-1B**
② Mechanical Interlock
3RA1924-2B
③ Fast Clips
FBC20

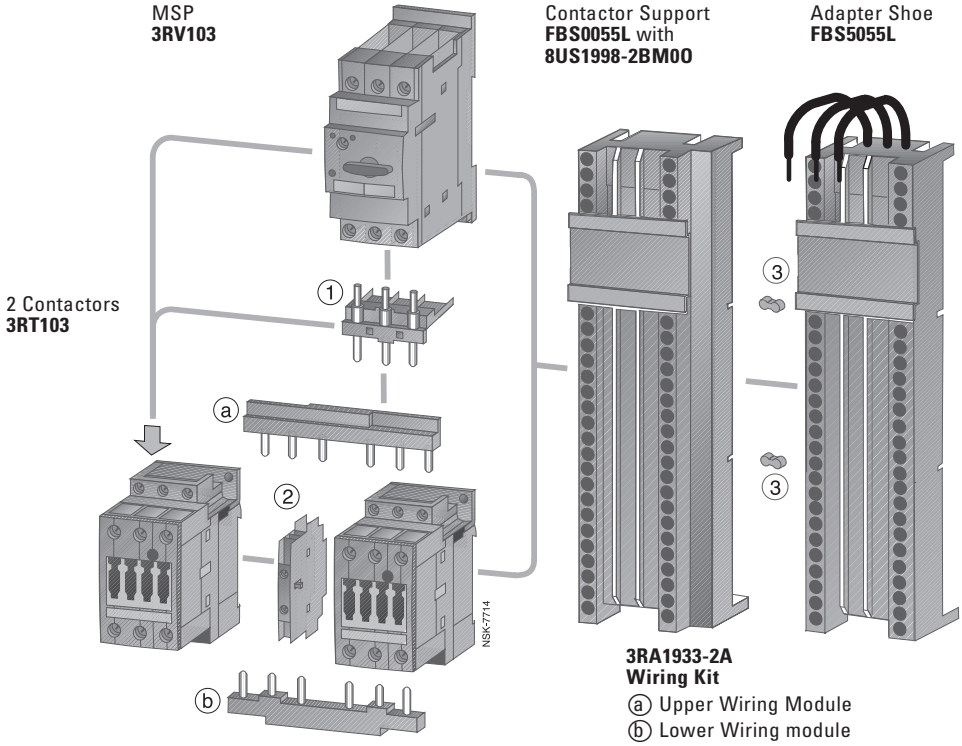

3RA1933-2A
Wiring Kit
ⓐ Upper Wiring Module
ⓑ Lower Wiring module

3RV104 with Reversing **3RT104**

① Link Module
for AC: **3RA1941-1A**
for DC: **3RA1941-1B**

② Mechanical Interlock
3RA1924-2B

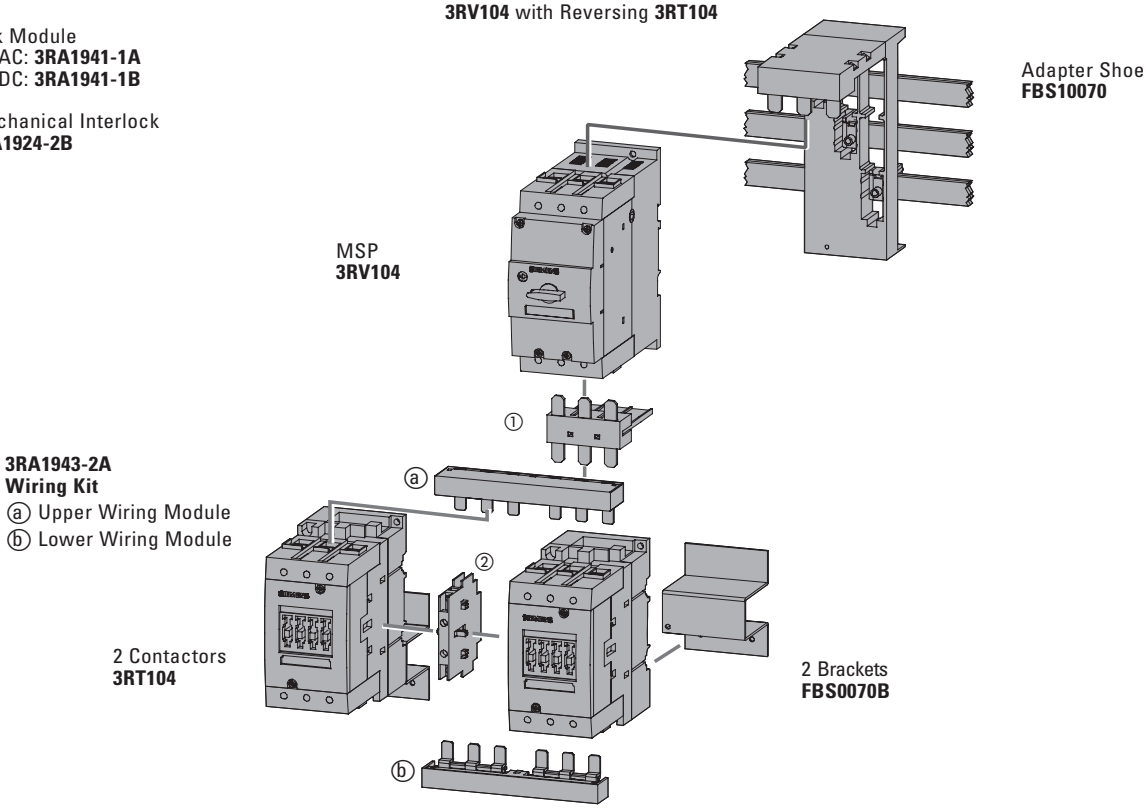

3RA1943-2A
Wiring Kit
ⓐ Upper Wiring Module
ⓑ Lower Wiring Module

2 Contactors
3RT104

2 Brackets
FBS0070B

onlinecomponents.com
THE ONLINE DISTRIBUTOR OF ELECTRONIC COMPONENTS

FBS0054
Adapter Shoe

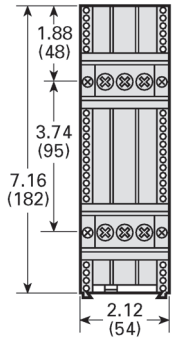

FBS0072
Adapter Shoe

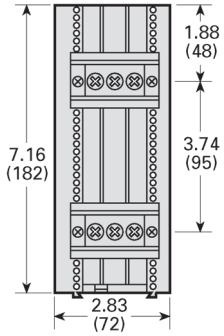

FBS3254
Adapter Shoe

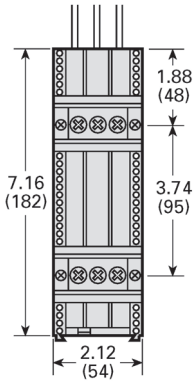

FBS3272
Adapter Shoe

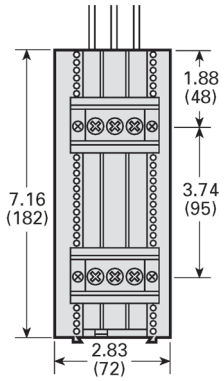

FBS6572
Adapter Shoe

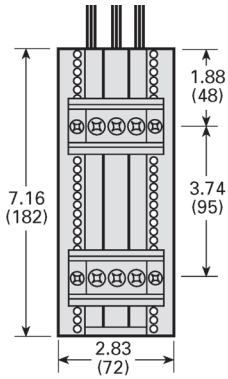

FBS8072①
Adapter Shoe

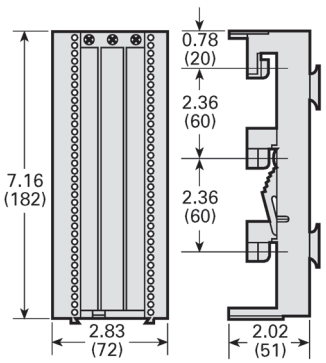

All dimensions shown in inches (millimeters). For reference purposes only. Not to be used for design or construction purposes.
①Side profile dimension is generic for all FBS type shoes.

onlinecomponents.com

Dimensions

1) FBS2545
Adapter Shoe
2) 8US1998-2BM00
Side Module
3) for busbar
width: 12 to 30 mm
thickness: 5 and 10 mm

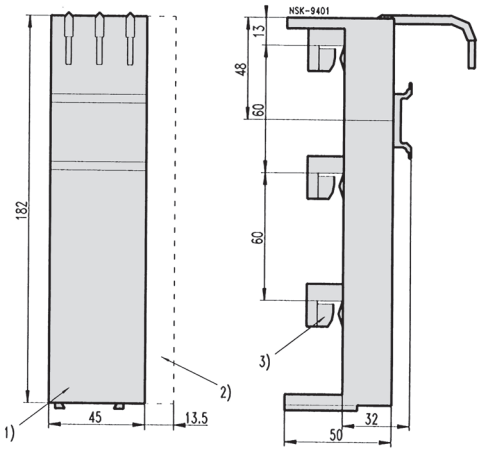

1) FBS5055
Adapter Shoe
2) 8US1998–2BM00
Side Module

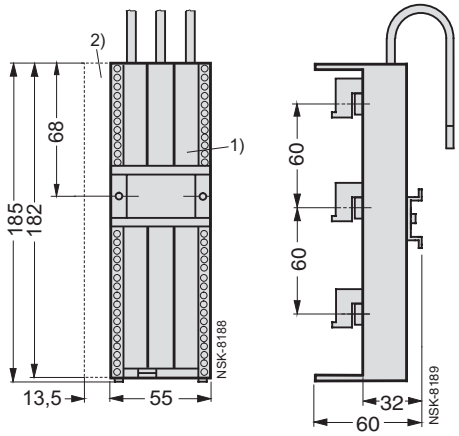

FBS10070
Adapter Shoe
with 3RV104 mounted

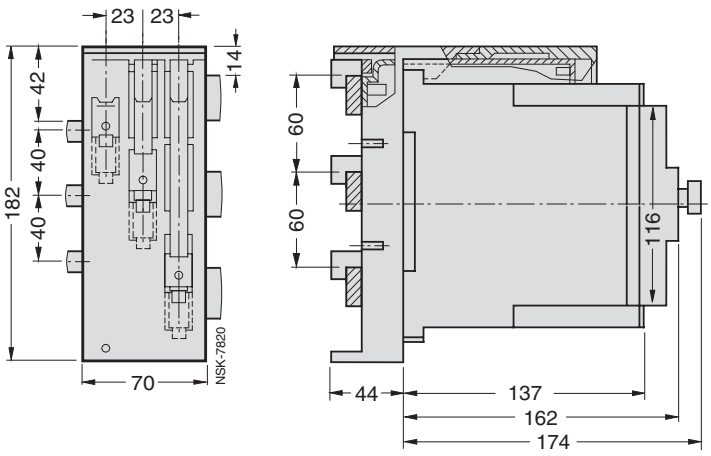

All dimensions shown in millimeters. For reference purposes only. Not to be used for design or construction purposes.

onlinecomponents.com
THE ONLINE DISTRIBUTOR OF ELECTRONIC COMPONENTS

Dimensions, 3RV101 with 3RT101

3RA1110
Fast Bus Non-reversing

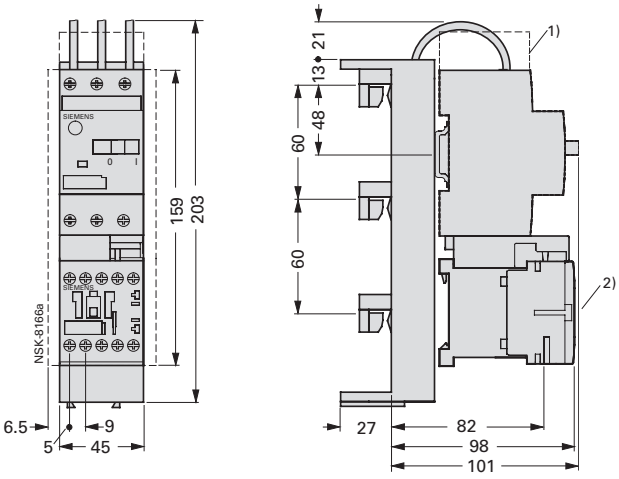

3RA1210
Fast Bus Reversing

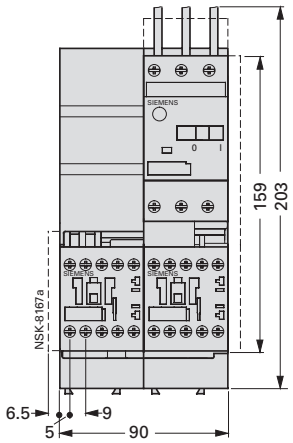

1) Arcing space
2) When a front auxiliary is installed on the contactor, add 39 mm to the depth of the contactor.

Dimensions, 3RV102 with 3RT101

3RA1120
Fast Bus Non-reversing

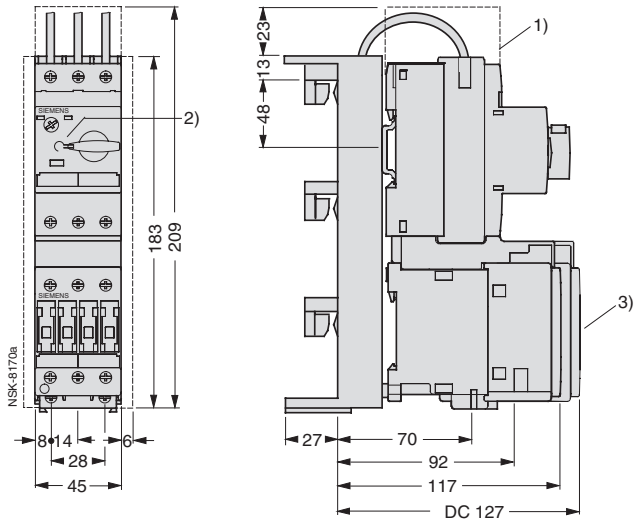

3RA1220
Fast Bus Reversing

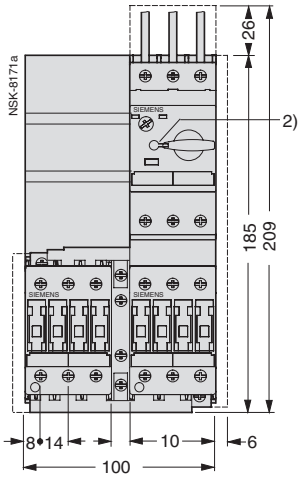

1) Arcing space
2) Lockable in OFF position. Padlock diameter 5 mm.
3) When a front mount auxiliary is installed on the contactor, add 49 mm to the depth of the contactor.

All dimensions shown in millimeters. For reference purposes only. Not to be used for design or construction purposes.

onlinecomponents.com

Dimensions

3RV103 with 3RT103

3RA1130
Fast Bus Non-reversing

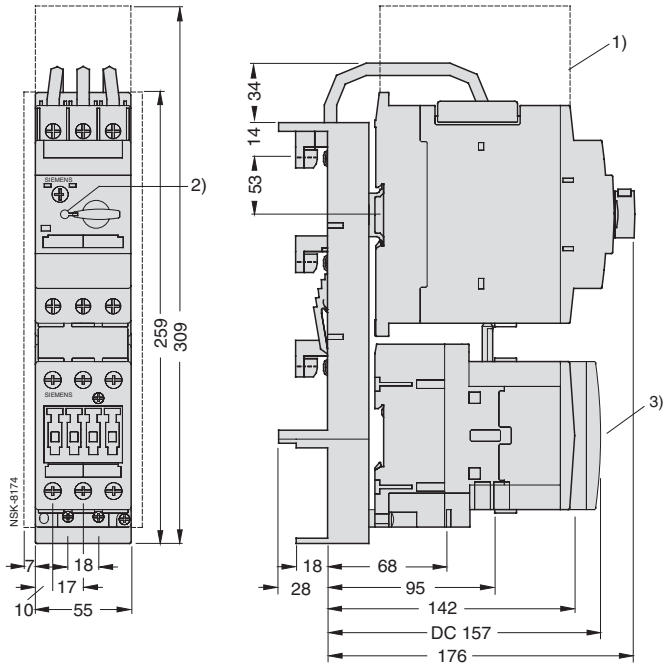

3RA1230
Fast Bus Reversing

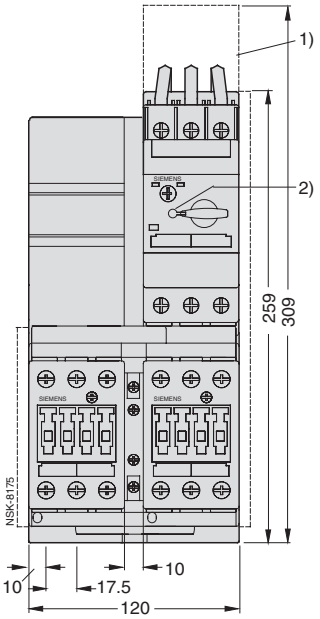

Lateral clearance to grounded components minimum 6 mm.

1) Arcing space
2) Lockable in OFF position with padlock diameter 5 mm.
3) When a front mount auxiliary is installed on the contactor, add 49 mm to the depth of the contactor.

All dimensions shown in millimeters. For reference purposes only. Not to be used for design or construction purposes.

onlinecomponents.com
THE ONLINE DISTRIBUTOR OF ELECTRONIC COMPONENTS

3RV104 with 3RT104

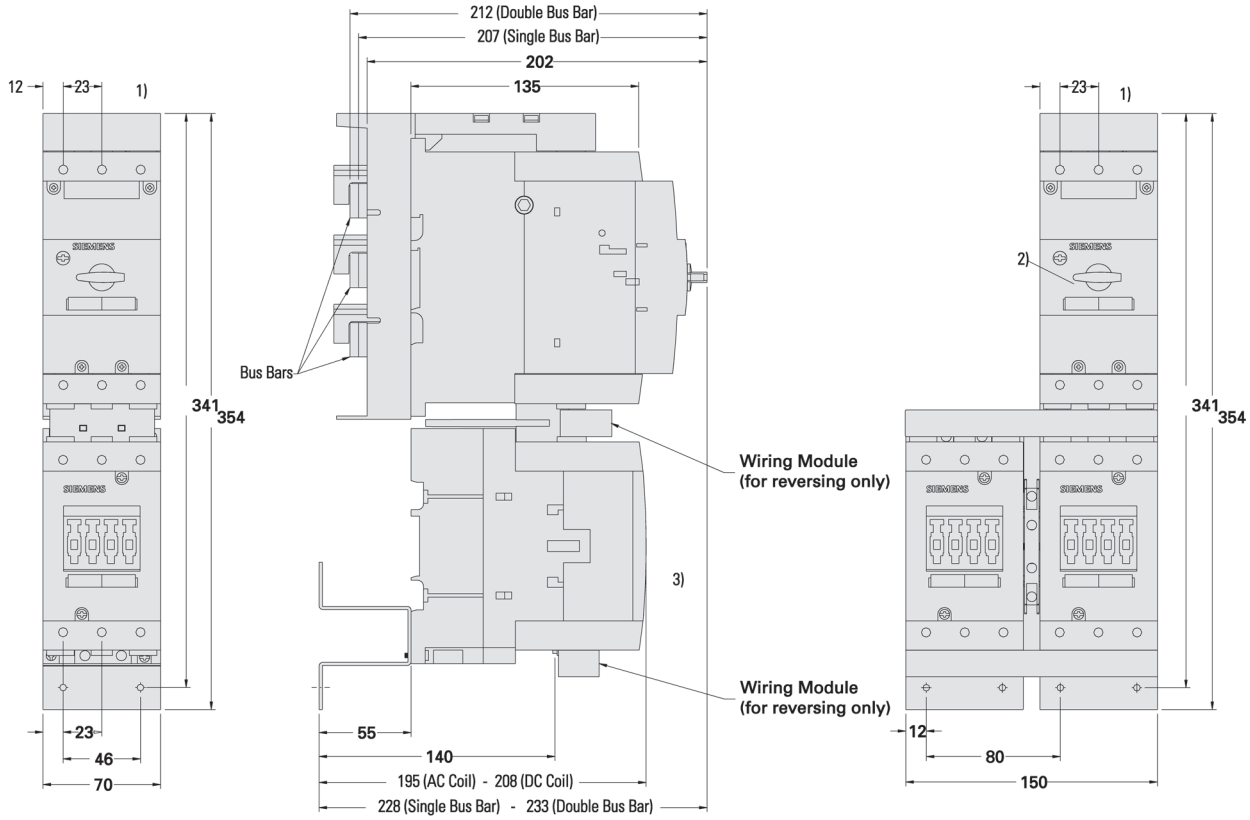

Lateral clearance to grounded components minimum 6 mm.

1) Arcing space
2) Lockable in OFF position with padlock diameter 5 mm.
3) When a front mount auxiliary is installed on the contactor, add 49 mm to the depth of the contactor.

All dimensions shown in millimeters. For reference purposes only. Not to be used for design or construction purposes.

onlinecomponents.com
THE ONLINE DISTRIBUTOR OF ELECTRONIC COMPONENTS