SIEMENS

Installation Sheet

November, 2016
Supersedes January 2016

E87010-A0105-T003-A6-CLM0
Lighting and Heating Contactor
60, 100, 200 Amp
2, 3, 4, 5 Pole
Magnetically Latched

Description

Magnetically latched CLM lighting and heating contactors can control tungsten, fluorescent and metal vapor lamp or heating loads. (Table 1 below shows the voltage and current rating for various loads). Each contactor and its associated load should be protected against short circuits by a suitable branch circuit protective device selected in accordance with the National Electric Code (NEC).

Table 1	Contactor Rating		
Catalog Number	CLM0D...	CLM0E...	CLM0F..
Cont. Current Rating, Amp.	60	100	200
Tungsten			
Max. Volts, line-line	480	480	480
Max. Volts, line-Neutral	277	277	277
Ballast			
Max. Volts, line-line	600	600	600
Max. Volts, line-Neutral	346	346	346
Heating			
Max. Volts, line-line	600	600	600
Max. Volts, line-Neutral	346	346	346

Table 1 - This industrial type contactor is designed to be installed, operated, and maintained by adequately trained personnel. These instructions do not cover all the variations of all of the topics covered herein. Contact your local sales office if you have questions regarding the product.

Theory of Operation

Each contactor contains a permanent magnet built into its structure that will maintain the contactor in its energized state indefinitely without using control power. When energized, DC voltage is applied to produce a magnetic field that reinforces the polarity of the permanent magnet and the contactor closes. Immediately, the current to the coil is disconnected by the coil clearing auxiliary contact. In order to open the contactor, it is necessary to create a field through the OFF coil in the reverse direction to the permanent magnet. This momentarily cancels the magnetic attraction and the contactor drops out.

Each CLM contactor has an electronic control module “CLMKCMR” which is used to energize and close the contactor and for the release circuit. It is designed for short time actuation of 1-3 cycles only. All coils are designed with a small wattage resistor in addition to a diode at coil voltages higher than 120 volts. Remote solid state switching devices have ‘off state’ leakage currents. They may also pass utility transient voltages through to the device electronics.

⚠ WARNING

Hazardous voltage can cause electrical shock and burns. Disconnect power before proceeding with any work on this equipment.



The low level ‘off state’ voltages are insufficient to actuate the contactor but large enough to burn out the resistors. Normal actuating voltages are quickly disconnected from the coils and control module by the latch clearing contacts. Coil and module failures are possible when used with solid state relays and PLC outputs. 24-volt systems are ok to use, but 120 volts and above should be discouraged. If higher voltages cannot be avoided, an interposing relay should be used.

Care should be taken when servicing that leads do not become changed from their factory installed terminals, or improper operation and possibly permanent damage to the contactor could result.

CAUTION -
Device sensitive to current polarity.
Risk of damage to this device.
Do not apply AC voltage directly to the coil terminals of this device!
The permanent magnet will be demagnetized and the rectifier will be damaged if alternating current or wrong polarity direct current is applied directly to the coil.

CAUTION -
High inrush.
Can cause damage to this device.

Avoid attempting to manually latch or delatch the contactor.

CAUTION -
Coil must be wired correctly.
Risk of damage to this device.
All control wiring for contactor operation must only be made to the coil isolationcontact terminals #2 & #3 and L2 terminal connection points. Wiring made to any other terminal points will burn out the coil and diode.
If a coil burnout occurs, both the coil and diode must be replaced.

Installation

The nameplate ratings of the contactor must agree with the power supply and the rating of the load. Contactor mounting should be solid to prevent vibration. When the contactor is provided with a channel iron base, grout the base in place. The preferred and recommended mounting position of the contactor is in a vertical plane. Before making any connections, be certain that all leads to be handled are de-energized.
power off, operate contactors, relays and interlocks to see that they work freely. See that all terminals and current carrying connections are clean and tight.

Power Circuit Terminals

Terminals are marked as suitable for either copper or aluminum conductors.

Contactor Rating	Range of Conductor Sizes CU/AL Terminals
60A	#14 - 4 AWG
100A	#6 - 1/0 AWG
200 A	#4 - 300 AWG

(Wire with conductors rated 75 ^{0}C. If conductors rated higher than 75 ^{0}C are used, their size must be based on torque ampacity values for 75 ^{0}C conductors.).Terminals torque values are shown in Table 2.

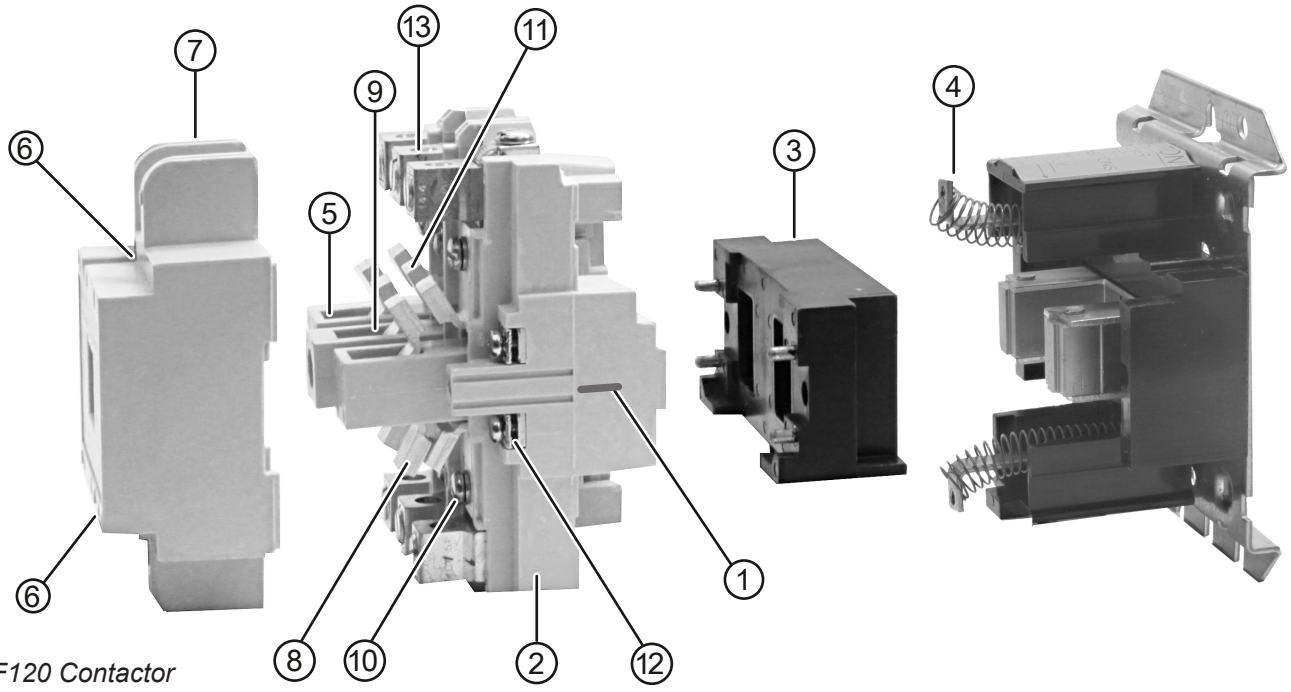

Fig. 1
60 Ampere, CLM0F120 Contactor
(Exploded View for clarity)

Table 2 - Recommended Driving Torque

Location (Qty.)	Driving Torque (lb.-in.)	Figure 1 Item
60 Ampere Contactors		
Cover Screw (2)	8-9	6
Coil Wire Connector (2)	8-9	12
Stationary Contact Screw (2/pole)	18-20	10
Main Power Connector (2/pole)	45-50	13
100 and 200 Ampere Contactors		
Cover Screw (2)	18-20	6
Coil Wire Connector (2)	8-9	12
Stationary Contact Screw (2/pole)	18-20	10
Main Power Connector (2/pole) (100 Amp.)	90-100	13
Main Power Connector (2/pole) (200 Amp.)	275-300	13

Table 3 - Fuse Block Kits

To meet NEC requirements concerning common control fusing, the following fuse kit catalog numbers are available for protection of the control circuit conductors.

Cat. No.	Description
KCCF1	For one pole fuse holder
KCCF1	For two pole fuse holder
Order Fuse Separately by Ampere Rating	
Control Conductor Size	Suggested Fuse Size * **
#16 AWG	10 AMP
#14 AWG	15 AMP
* Buss Fuse KTK or equivalent	
** When using a control transformer, select fuse size based on NEC code	

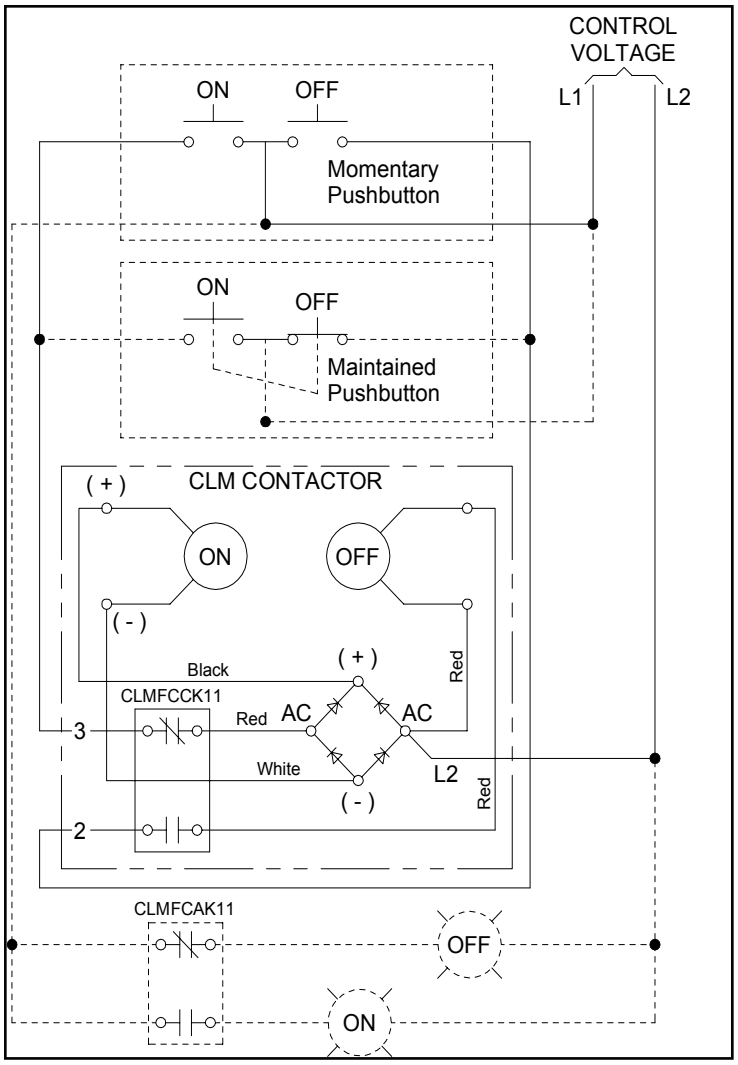

Fig. 2 Connection Diagram for Separate Control.

(Magnetically-latched contactors are equipped with coils designed for intermittent duty only. Faulty coil action can be caused by a defective coil or damaged control module. Replacement of both is recommended when the contactor will not pull in or drop out. Coil replacement for the purpose of changing the control voltage rating does not require auxiliary contact or control module replacement.)

Coil Replacement – refer to Figure 1, Table 2.
Loosen the two screws at each side of the upper base and remove the wire connections. Loosen the assembly screws (1). Pull the loosened upper base structure (2) forward. Unplug the coil (3) from the upper base, plug in a new coil and replace the upper base structure while depressing the kick-out springs (4) to ensure they set in the molded seats in the crossbar (5). Reconnect the four coil leads. Tighten the assembly screws referring to Table 2. Mechanically operate the unit to ensure there is no binding of the crossbar.

Contact Inspection – refer to Figure 1
Loosen the two arc chute screws (6) located immediately above and below the nameplate and remove the arc chute (7). The contacts (8) are visible. Re-tighten the screws per Table 2.

Contact Wear and Replacement
refer to Figure 1, Table 2.

CAUTION: Install arcbox prior to energization

Contacts are designed for a long service life based on a specific electrical load under normal service and environmental conditions. If any one of these factors is altered, a shorter service life or a breakdown will result. Contactors are subject to both mechanical and electrical wear during their operation. In most cases mechanical wear is insignificant. The erosion of the contacts is due to electrical wear. During arcing, material from each contact is vaporized and blown away from the useful contacting surface.

***Note:** When contact replacement is required, it is necessary to replace both stationary and moving contacts plus moving contact overtravel springs. After replacement, manually operate switch to be sure binding does not occur.*

After removing the arc chute (7) and with replacement contacts in hand, compress the overtravel spring (9) and remove the moving contact (8) from the crossbar (5). Remove any power connections. Remove screws (10) and lift out the stationary contact carriers (11). The new contacts are then installed by reversing the above procedure and referencing Table 2 for torque specifications. Moving contacts should be free to move, overtravel spring seated, and the crossbar free to move when the arc chute is in position. Silver cadmium oxide contact buttons require NO dressing or lubrication during their life.

Magnet - Armature Assembly
Self alignment and permanent air gap features of the magnet armature make replacement unnecessary. Mating pole face surfaces should be kept clean.

Short Circuit Ratings
These lighting contactors are suitable for use on a circuit capable of delivering not more than the current (rms symmetrical amperes) shown in circuits rated not more than the voltage shown in table 8.

Table 4 - Coil Data

AC Coil Data	Model L Coil Data - Typical Values		
Contactor	**Poles**	**Inrush VA**	**Dropout VA**
60A	2 - 4	410	40
60A	4 - 5	600	40
100A	2 - 3	900	200
100A	4 - 5	1300	130
200A	2 - 3	900	200
200A	4 - 5	1300	130

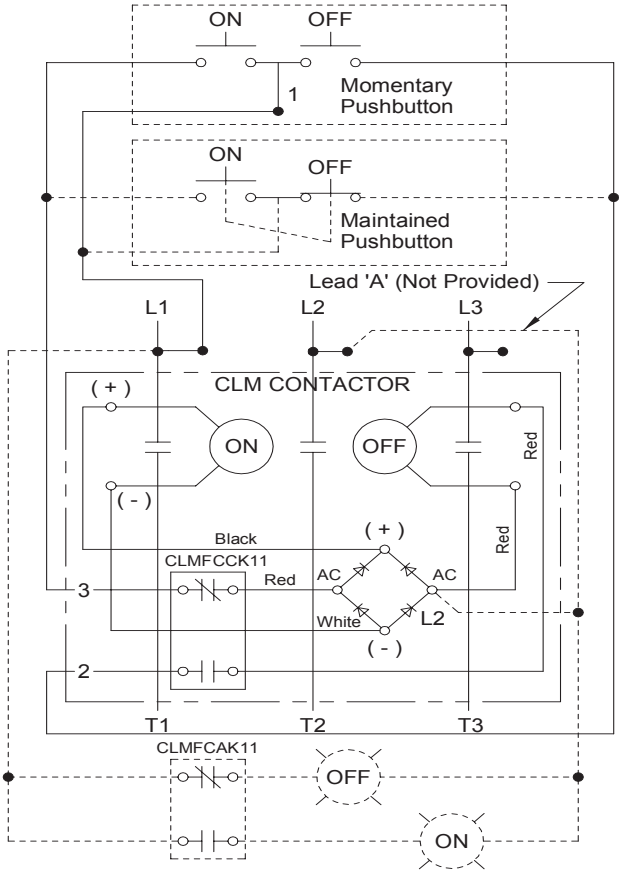

Fig. 3 Connection for Common Control

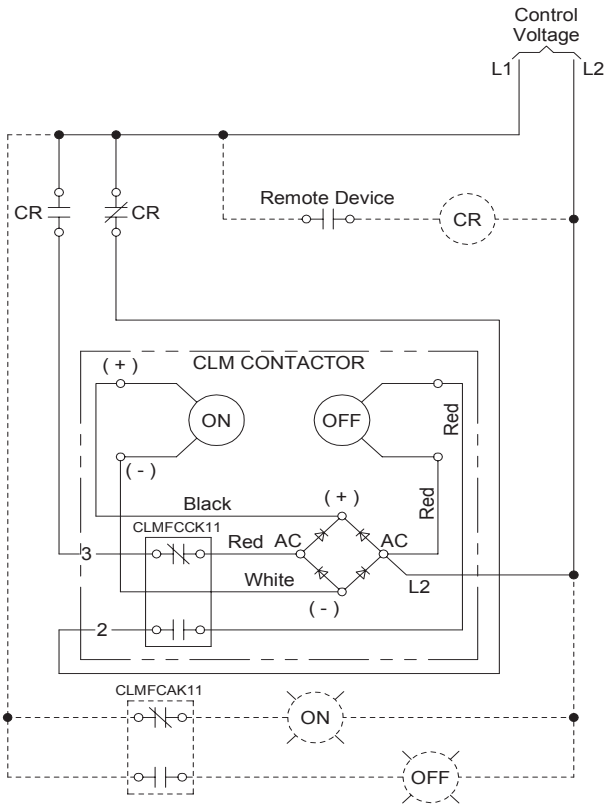

Fig. 4 Connection for 2 Wire Separate Control

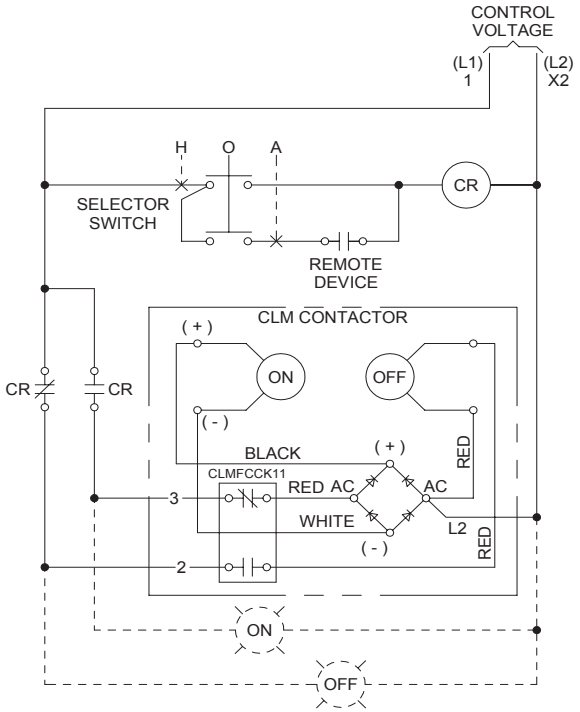

Fig. 5 Connection for Hand/Off/Auto Control

Table 5 - Renewal Parts

Contactor Rating and Pole Combination	Main Contact Kit Part Number
60 Amp 2 Pole	CLMDCK02
60 Amp 3 Pole	CLMDCK03
60 Amp 4 Pole	CLMDCK04
60 Amp 5 Pole	CLMDCK05
100 Amp 2 Pole	CLMECK02
100 Amp 3 Pole	CLMECK03
100 Amp 4 Pole	CLMECK04
100 Amp 5 Pole	CLMECK05
200 Amp 2 Pole	CLMFCK02
200 Amp 3 Pole	CLMFCK03
200 Amp 4 Pole	CLMFCK04
200 Amp 5 Pole	CLMFCK05

Item	Cat./Part Number
Latch Coil Clearing Auxiliary	CLMFCCK11
Latch Contactor Control Module	CLMKCMR
Auxiliary Contact 1 NO 1 NC	CLMFCAK11
Auxiliary Contact 2 NO 0 NC	CLMFCAK20
Auxiliary Contact 0 NO 2 NC	CLMFCAK02

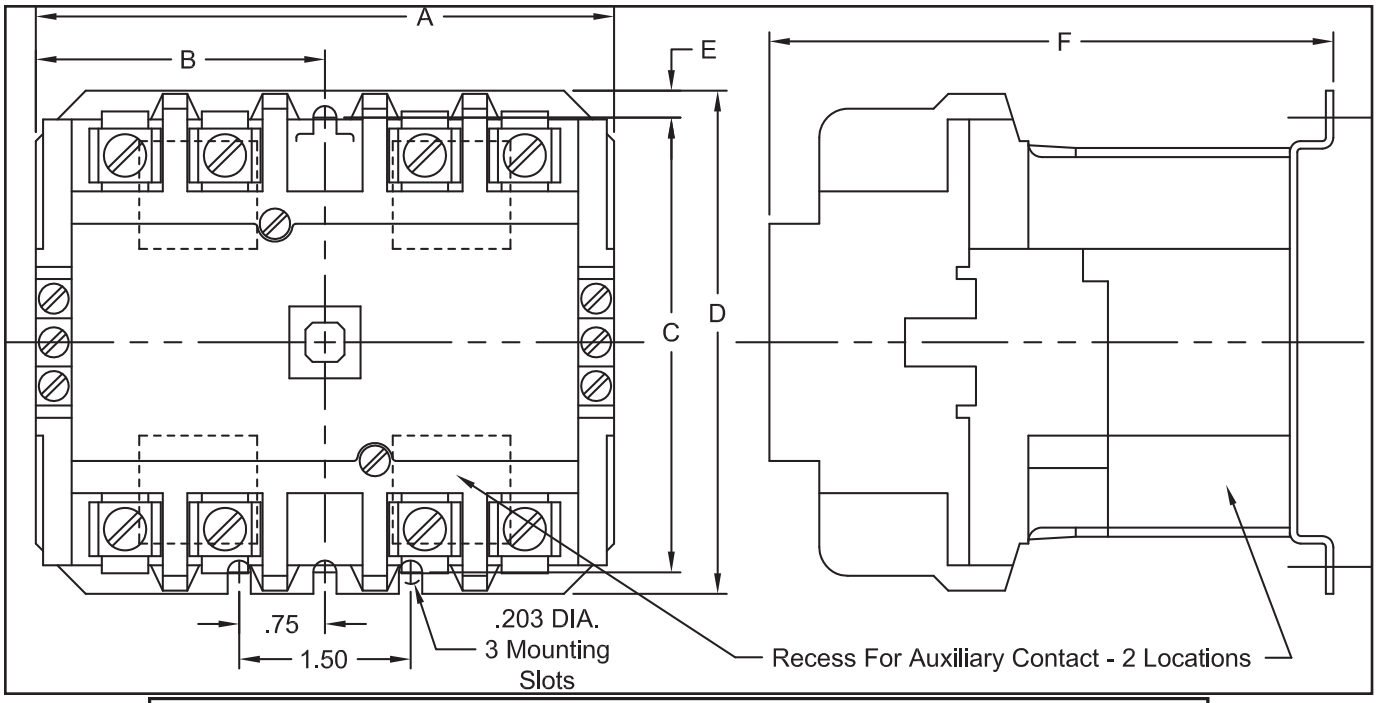

Frame Size	A	B	C	D	E	F	Shipping Weight
60A 2-3 Pole	3.31	1.66	3.95	4.38	.23	4.94	3.3 lb.
60A 4-5 Pole	5.06	2.53	3.95	4.38	.23	4.94	4.5 lb.
100/200A 2-3 Pole	4.62	2.31	5.00	5.62	.38	6.75	9.3 lb.
100/200A 4-5 Pole	7.25	3.62	5.00	5.62	.38	6.75	13.0 lb.

Fig. 6 Dimension Drawing 60, 100 and 200 Amp Device

CAUTION -
Coil must be wired correctly.
Risk of damage to the device.

All control wiring for contactor operation must only be made to the coil isolation contact terminals #2, #3 and L2 terminal connection points. Wiring made to any other terminal points will burn out the coil and diode. If a coil burnout occurs, both the coil and the diode must be replaced.

Storage

Electrical control equipment which is to be stored prior to its installation, should be checked before placing in storage for possible damage during transit. It should then be repacked and stored in a location which is clean and dry.

When storage is in or near buildings under construction, provide covers to protect the equipment against dust, moisture and falling objects.

Apparatus stored for long periods may corrode. Damage, while stored, will be minimized by maintaining the best possible storage conditions, and by periodically inspecting the equipment and arresting the progress of corrosion and other forms of deterioration which may be found. A small amount of heat will stop corrosion that occurs from moisture due to condensation.

Table 6 - AC Operating Coils for 60 Ampere Contactors

Voltage VAC	Freq. Hz	Part Number 2-4 Pole	Part Number 4-5 Pole
24	60 Hz	CLMD3C024	CLMD5C024
110/120	50/60 Hz	CLMD3C120	CLMD5C120
208	60 Hz	CLMD3C208	CLMD5C208
220/240	50/60 Hz	CLMD3C240	CLMD5C240
277	60 Hz	CLMD3C277	CLMD5C277
440/480	50/60 Hz	CLMD3C480	CLMD5C480
550/600	50/60 Hz	CLMD3C600	CLMD5C600

Table 7 - AC Operating Coils for 100 and 200 Ampere Contactors

Voltage VAC	Freq. Hz	Part Number 2-4 Pole	Part Number 4-5 Pole
24	60 Hz	CLME3C024	CLME5C024
110/120	50/60 Hz	CLME3C120	CLME5C120
208	60 Hz	CLME3C208	CLME5C208
220/240	50/60 Hz	CLME3C240	CLME5C240
277	60 Hz	CLME3C277	CLME5C277
440/480	50/60 Hz	CLME3C480	CLME5C480
550/600	50/60 Hz	CLME3C600	CLME5C600

Model L Replacement Coils

Order by part number, voltage and frequency

Table 8 - Short Circuit Ratings

Contactor Amp Rating	Short-Circuit Protective Device (SCPD)	Max. Amp Rating of (SCPD)	Voltage	Short-Circuit Current RMS Symmetrical Amperes
60	Circuit breaker	60	600	5,000
100	Circuit breaker	100	600	5,000
200	Circuit breaker	200	600	10,000

Table 9 - Contact Ratings

Auxiliary Contact Ratings (A600, R300)			
Voltage	**Continuous**	**Make**	**Break**
120-600 VAC	10A	7200VA	720VA
72-120 VAC	10A	60A	720VA
28-72 VAC	10A	60A	10A
28-300 VDC	1A	28VA	28VA

These instructions do not purport to cover all details or variations in equipment nor to provide for possible contingency to be met in connection with installation, operation, or maintenance. Should further information be desired, or should problems arise which are not covered sufficiently for the purchaser's purpose, the matter should be referred to the local Siemens Industry, Inc., Sales Office.

The contents of this instruction sheet shall not become part of or modify any prior or existing agreement, commitment or relationship. The sales contract contains the entire obligation of Siemens Industry, Inc. The warranty contained in the contract between the parties is the sole warranty of Siemens Industry, Inc. Any statements contained herein do not create new warranties or modify the existing warranty.

Troubleshooting

Problem	Cause	Corrective Action
Contacts		
Contacts Chatter	Low Voltage	Check supply voltage, especially during starting. Check coil voltage rating. Increase voltage or change coil rating as required.
Welding	Abnormal Inrush Current	Check for grounds, shorts, or excessive load current.
	Insufficient Contact Pressure	Replace contacts and springs, check contacts for abnormal wear or damage.
	Low Voltage Preventing Magnet from Sealing	Check supply voltage to coil, especially for momentary dip during startup.
	Foreign Matter Preventing Contacts from Closing	Clean contacts with LPS CFC-Free Electro Contact Cleaner. Contacts used at low current and voltage should be cleaned with Freon.
	Short Circuit	Remove fault and check to be sure fuse or breaker size is correct.
	Excessive Inrush Current	Use next larger size contactor.
Short Contact Life or Overheating	Filing or Dressing	**DO NOT FILE SILVER CONTACTS**. Rough spots or discoloration will not harm contacts of impair their efficiency.
	Interrupting Excessively High Currents	Check for grounds, shorts or excessive currents. Use larger size contactor.
	Weak Contact Pressure	Replace contacts and springs, check contacts for abnormal wear or damage.
	Foreign Matter on Contact Surface	Clean contacts with LPS CFC-Free Electro Contact Cleaner. Take steps to reduce entry of foreign matter into enclosure.
	Short Circuit or Ground Fault	Remove fault and check to be sure fuse or breaker size is correct.
	Loose Connection in Power Circuit	Clean and tighten.
Coils		**Caution -** All control wiring for contactor operation must only be made to the coil isolation contact terminals #2 and #3, and L2 terminal connection points. Wiring made to any other terminals will burn out the coil and diode. If a coil burnout occurs, both the coil and diode must be replaced.
Open Circuit	Mechanical Damage	Replace with new coil. Handle and store new coils carefully.
Overheated Coil	Incorrect Coil	Check coil rating and replace with correct coil.
Magnetic and Mechanical Parts		Each CLM contactor has an electronic control module 'CLMKCMR' which is used to energize and close the contactor and for the release circuit. It is designed for short time actuation of 1-3 cycles only. All coils are designed with a small wattage resistor in addition to a diode at coil voltage higher than 120 Volts. Remote solid state switching devices have 'off state' leakage currents. They may also pass utility transient voltages through to the device electronics. The low level 'off state' voltages are insufficient to actuate the contactor but large enough to burn out the resistors. Normal actuating voltages are quickly disconnected from the coils and control module by the latch clearing contacts. Coil and module failures are possible when used with solid state relays and PLC outputs. 24-Volt systems are ok to use, but 120 volts and above should be discouraged. If higher voltages cannot be avoided, an interposing relay should be used.
Failure to Pick-up and Seal	Low Voltage	Check system voltage and voltage dips during starting.
	Wrong Coil or Wrong Connection	Check coil marking and wiring.
	Mechanical Obstruction	With power off, check for movement of armature and contacts.
	Coil Open or Overheated	Replace.
Failure to Drop-Out	Sticky Substance on Pole Faces	Clean pole faces with LPS CFC-Free Electro Contact Cleaner.
	Release Coil not Energized	Check coil, coil circuit or length of leads from supply voltage to coil. Coil may be open or lead length is excessive.
	Worn or Rusted Parts Causing Binding	Replace unit.
	Contacts Welded	See 'Welding' under Contacts.