SIEMENS

Data sheet US2:CLM0D03208



Mechanically held lighting contactor, Contactor amp rating 60A, 0 N.C. / 3 N.O. poles, 208VAC 60HZ coil, Non-combination type, Enclosure NEMA type (open), No enclosure

product brand name	Class CLM
design of the product	Magnetically latched lighting contactor
special product feature	Energy efficient; Quiet operation
General technical data	
weight [lb]	3 lb
Height x Width x Depth [in]	4.53 × 3.43 × 5.1 in
touch protection against electrical shock	Not finger-safe
installation altitude [ft] at height above sea level maximum	6560 ft
country of origin	USA
Contactor	
size of contactor	60 Amp
number of NO contacts for main contacts	3
number of NC contacts for main contacts	0
operating voltage for main current circuit at AC at 60 Hz maximum	600 V
mechanical service life (operating cycles) of the main contacts typical	10000000
contact rating of the main contacts of lighting contactor	
● at tungsten (1 pole per 1 phase) rated value	60A @277V 1p 1ph
● at tungsten (2 poles per 1 phase) rated value	60A @480V 2p 1ph
● at tungsten (3 poles per 3 phases) rated value	60A @480V 3p 3ph
● at ballast (1 pole per 1 phase) rated value	60A @347V 1p 1ph
● at ballast (2 poles per 1 phase) rated value	60A @600V 2p 1ph
● at ballast (3 poles per 3 phases) rated value	60A @600V 3p 3ph
● at resistive load (1 pole per 1 phase) rated value	60A @347V 1p 1ph
● at resistive load (2 poles per 1 phase) rated value	60A @600V 2p 1ph
● at resistive load (3 poles per 3 phases) rated value	60A @600V 3p 3ph
Auxiliary contact	
number of NC contacts for auxiliary contacts	0
number of NO contacts for auxiliary contacts	0
number of total auxiliary contacts maximum	4
contact rating of auxiliary contacts of contactor according to UL	NA
Coil	
type of voltage of the control supply voltage	AC
control supply voltage	
● at AC at 60 Hz rated value	208 V
apparent pick-up power of magnet coil at AC	410 VA
apparent holding power of magnet coil at AC	40 VA
operating range factor control supply voltage rated value of magnet coil	0.85 ... 1.1

Subject to change without notice
© Copyright Siemens

Enclosure	
degree of protection NEMA rating of the enclosure	Open device (no enclosure)
design of the housing	NA
Mounting/wiring	
mounting position	Vertical
fastening method	Surface mounting and installation
type of electrical connection for supply voltage line-side	Box lug
tightening torque [lbf·in] for supply	45 ... 50 lbf·in
type of connectable conductor cross-sections at line-side for AWG cables single or multi-stranded	1x (14 ... 4 AWG)
temperature of the conductor for supply maximum permissible	75 °C
material of the conductor for supply	AL or CU
type of electrical connection for load-side outgoing feeder	Box lug
tightening torque [lbf·in] for load-side outgoing feeder	45 ... 50 lbf·in
type of connectable conductor cross-sections for AWG cables for load-side outgoing feeder single or multi-stranded	1x (14 ... 4 AWG)
temperature of the conductor for load-side outgoing feeder maximum permissible	75 °C
material of the conductor for load-side outgoing feeder	AL or CU
type of electrical connection of magnet coil	Screw-type terminals
tightening torque [lbf·in] at magnet coil	8 ... 12 lbf·in
type of connectable conductor cross-sections of magnet coil for AWG cables single or multi-stranded	2x (16 ... 12 AWG)
temperature of the conductor at magnet coil maximum permissible	75 °C
material of the conductor at magnet coil	CU
Short-circuit current rating	
design of the fuse link for short-circuit protection of the main circuit required	none
design of the short-circuit trip	Thermal magnetic circuit breaker
maximum short-circuit current breaking capacity (Icu)	
• at 240 V	5 kA
• at 480 V	5 kA
• at 600 V	5 kA
certificate of suitability	NEMA ICS 2; UL 508; CSA 22.2, No. 14
Approvals Certificates	
Test Certificates	

UL

Further information

Industrial Controls - Product Overview (Catalogs, Brochures,…)
www.usa.siemens.com/iccatalog
Industry Mall (Online ordering system)
https://mall.industry.siemens.com/mall/en/us/Catalog/product?mlfb=US2:CLM0D03208
Service&Support (Manuals, Certificates, Characteristics, FAQs,...)
https://support.industry.siemens.com/cs/US/en/ps/US2:CLM0D03208
Image database (product images, 2D dimension drawings, 3D models, device circuit diagrams, EPLAN macros, ...)
https://www.automation.siemens.com/bilddb/cax_de.aspx?mlfb=US2:CLM0D03208&lang=en
Certificates/approvals
https://support.industry.siemens.com/cs/US/en/ps/US2:CLM0D03208/certificate

© Copyright Siemens

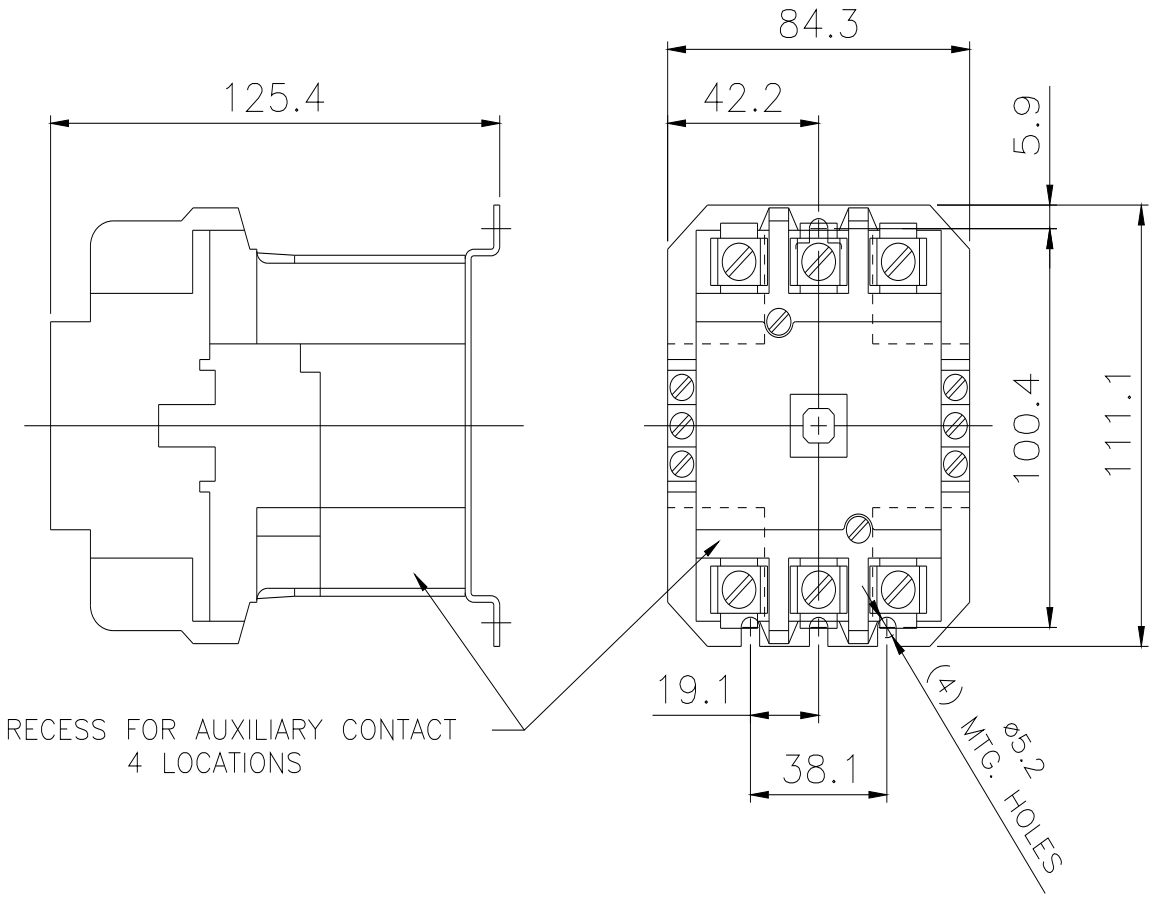

Wiring Diagram Class CLM
30-200 Amp 2, 3, 4 and 5 Pole

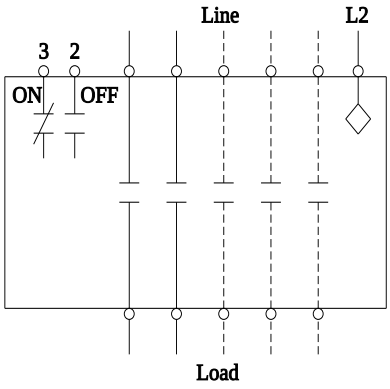

Notes:
1. Dotted lines represent additional poles.
   Contactor may have 2, 3, 4 or 5 poles.
2. Optional auxiliary contacts are not shown.

E87010-A0410-T009-A1-CLM-1

last modified: 10/23/2025

Subject to change without notice
© Copyright Siemens

Subject to change without notice
© Copyright Siemens