SIEMENS

7814



Actuators for air and gas dampers

SQM45...
SQM48...

Electromotoric actuators

- **Torques:** **– SQM45... up to 3 Nm**
  – SQM48... up to 20 Nm
  – SQM48.6... up to 35 Nm
- **Running times: [1)]** **– SQM45... 10 ... 120 s**
  – SQM48... 30 ... 120 s
  – SQM48.6... 60 ... 120 s
  [1)] Depending on the type of basic unit (LMV5...)
- **Versions:** **– Choice of drive shafts (refer to «Type summary»)**

The actuators SQM45... / SQM48... and this Data sheet are intended for use by OEMs which integrate the actuators in their products!

Use

The SQM45 / SQM48 actuators are suited for driving oil pressure controllers, butterfly valves, dampers or for use on other applications that require rotary motion.

Areas of application are oil and gas burners of medium to larger capacity, as well as thermal process plants.

The actuators are used primarily for the load-dependent control of the gas flow, oil volume and combustion air volume in connection with the electronic ratio control LMV5.

Supplementary documentation

Product type	Type of documentation	Documentation number
LMV5...	Basic documentation	P7550
AZL5...	User documentation	A7550

Warning notes



To avoid injury to persons, damage to property or the environment, the following warning notes must be observed!

Do not open, interfere with or modify the actuators!

- Read the documentation on the actuators carefully and fully. If not observed, dangerous situations can occur
- The user must ensure that the actuators meet the requirements of the relevant application standards
- Safety-related applications are only available with Siemens burner controls
- All product-related activities (mounting, settings and maintenance) must be performed by qualified and authorized personnel



Attention!

- Risk of electric shock – to disconnect the equipment from the power, it may be necessary to open more than one switch. Before performing maintenance work, the equipment must be disconnected from power
- The electrical connection between the conduit fittings is not made automatically. It must be established on installation site
- The connecting plate is made of plastic and does not provide earthing of the conduit fittings. Earthing must be ensured by adequate washers and wire links.

- To ensure protection against electric shock, the connection terminals must have adequate protection. Make certain that non-insulated connections or wires cannot be touched
- Each time work has been carried out (mounting, installation, service work, etc.), check to ensure that wiring is in an orderly state
- Fall or shock can adversely affect the safety functions. Such units must not be put into operation, even if they do not exhibit any damage
- Static charges must be avoided since they can damage the electronic components on contact.
  Recommended: Use ESD equipment

Notes on use in North America

Only flexible conduits with relevant accessories may be used.

Mounting notes

- Ensure that the relevant national safety regulations and notes on standards are complied with
- In the geographical areas where DIN regulations are in use, the requirements of VDE must be complied with, especially DIN/VDE 0100, 0550 and DIN/VDE 0722
- Make certain that the actuator is not exposed to direct solar radiation
- Required tightening torques for the fixing screws of the
  - housing cover: 3.5 Nm
  - connecting cover: 2 Nm
- The connection between actuator drive shaft and controlling element must be **flexible but torsionally rigid couplings** with **free from backlash**

Positive connection

Note!
Possible connection with drive shaft or hub:
- Groove with Woodruff key
- Drive shaft with flat edge and matching counter piece

To avoid inadmissible loads and moments by mechanical overload, appropriate actions must be taken at the mechanical coupling

Example: Metal bellows clutches as compensating clutches with no mechanical play

Cable and cable shielding

Only the specified cable may be used (refer to Basic Documentation P7550). The cable's shielding must be connected to the printed circuit board using the tab provided.

Warning!
Ensure that the actuator's housing is connected to functional earth (FE) of the system.
If necessary, remove isolating layers of paint from the fixing points on the burner's casing or run separate earth wires. For detailed information, refer to «Installation Instructions for the LMV5… system» (J7550.1).

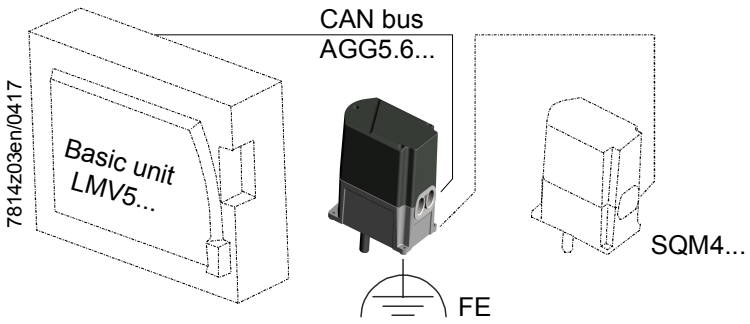

Working range of actuator

The working range is given on the type field and must be observed when mounting the actuator. To ensure the actuator is accurately located on the burner, a positioning pin of 6 mm diameter must be fitted on the mounting surface.

IP54

To ensure **degree of protection IP54,** suitable M16 glands must be fitted in the actuator's M16 openings. The M16 glands used must feature cable strain relief. To ensure degree of protection IP54 during the actuator's entire service life, the bearing of the drive shaft must be located such that it will not be directly exposed to water or dust.

Mounting example

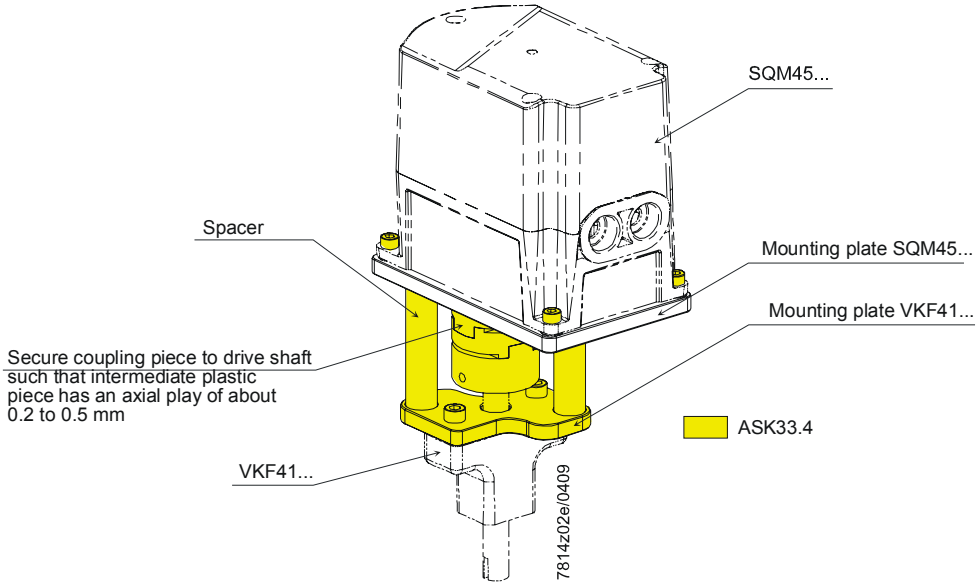

Warning!
SQM45.xxxB9 / SQM48.xxxB9 must be installed at a sufficient distance from magnetic fields (e.g. permanent magnets, transformers, electric motors, etc.). With magnetic fields of ≤1000 mT, a minimum distance of 10 cm must be complied with. For stronger magnetic fields (>1...10 T), a minimum distance of 40 cm must be complied with.

Installation notes

- Ensure that the electrical wiring is in compliance with national and local regulations.
- Make certain that strain relief of the connected cables is in compliance with the relevant standards (e.g. as per DIN EN 60730 and DIN EN 60335)
- Ensure that spliced wires cannot come into contact with neighboring terminals. Use suitable ferrules
- In case of increased vibration requirements, the internal connector system must be additionally secured
- The connection between the actuator drive shaft and the relevant controlling element must be form-fitted
- The holding torque is reduced when the actuator's power supply is switched off

Housing cover



Warning!
The housing cover may only be removed for short periods of time for wiring or when making the addressing. It must be made certain that dust or dirt will not get inside the actuator while such work is carried out.

ESD



Warning!
The actuator contains a printed circuit board with ESD-sensitive components. The top side of the board carries a cover which affords protection against direct contact. This protective cover must not be removed! The underside side of the board must not be touched.

Addressing

Addressing (assignment of functions) defines whether the SQM4... shall operate as a

- fuel actuator
- air damper actuator, or
- auxiliary actuator,

and is made with the display and operating unit AZL5... and the addressing button on the actuator, which is located under the housing cover (refer to Basic Documentation P7550).
The correct assignment of actuator functions can be checked with the help of flashing LEDs.

Cable length
Topology

For the maximum permissible cable length, refer to the Basic Documentation.
Cabling must be strictly serial (**no branching permitted!**).

Electrical connection

The supplied RAST3.5 connector must be used with screw terminals for electrical connections. A tightening torque of 0.25 Nm must be observed for fitting the screw.

Standards and certificates

Note!
Only in conjunction with the basic unit LMV5 (see Basic Documentation P7550).

EAC Conformity mark (Eurasian Conformity mark)

ISO 9001:2015
ISO 14001:2015
OHSAS 18001:2007

China RoHS
Hazardous substances table:
http://www.siemens.com/download?A6V10883536

Lifetime

The actuator has a designed lifetime* of 250,000 start cycles (OFF ⇨ ON ⇨ OFF) under load with the rated torque in the entire rotation angle range, which under normal operating conditions in heating mode corresponds to approx. 10 years of service (starting from the production date given on the nameplate). This is based on the endurance tests specified in the standard EN 298.
A summary of the conditions has been published by the European Control Manufacturers Association (Afecor) (www.afecor.org).

The designed lifetime is based on use of the actuator according to the manufacturer's data sheet. After reaching the designed lifetime in terms of the number of burner startup cycles, or after the corresponding usage time, the actuator must be replaced by authorized personnel.

* The designed lifetime is not the warranty time specified in the Terms of Delivery.

Service notes

Replacement

When replacing an actuator, the following points must be checked and, if necessary, corrected:

- Addressing (assignment of functions)
- Bus termination
- Adjustment of the curvepoints of electronic fuel / air ratio control (e.g. with the LMV5...)

Disposal notes

The actuator contains electrical and electronic components and must not be disposed of together with domestic waste.
Local and currently valid legislation must be observed.

Mechanical design

Housing	Die-cast aluminum lower housing. Housing cover made of impact-proof and heat-resistant plastic. Color of cover: Black
Drive motor	Stepper motor
Type of position feedback	**Type**: SQM45.xxxB9 / SQM48.xxxB9 **Component part**: Hall sensor
Adjustment of switching points / position indication	In connection with the basic unit (e.g. LMV5...): Via the display and operating unit AZL5… (refer to Basic Documentation P7550).
Electrical connections	RAST3.5 terminals (supplied together with the AGG5.720 / AGG5.721).
Gear train	SQM45...: Spur gears made of plastic with small backlash and permanent lubrication. SQM48...: Spur gears made of steel with small backlash and permanent lubrication.
Drive shaft	Made of black-finished steel, ready fitted to the front of the gear train (SQM48... uses a drive shaft made of hardened steel).
Mounting and fixing	The front of the gear train is used as the mounting surface. The actuator has 4 fixing holes and 1 elongated hole for the positioning pin. Alternatively, the actuator can be secured from the side of the controlling element with 3 self-tapping screws.
Mounting kit ASK33.4	For mounting of SQM45.295x9 actuator on VKF41.xxC butterfly valve, an ASK33.4 mounting kit is always required. The mounting kit consists of coupling with a preassembled mounting kit.

Type summary

Actuators SQM4... When ordering, please give type references of actuator and accessories according to «Type summary».

Article number	Type	Drive shaft 1)	Running time (min.) for 90°	Nominal output torque 3) 4) (max.)	Holding torque 2) 3) 4) (max.)	Radial bearing force (max.)
		no.	s	Nm	Nm	N
S55451-D201-A100	**SQM45.291B9**	1	10	3	1,5	190
S55451-D202-A100	**SQM45.295B9**	5	10	3	1,5	190
S55451-D301-A100	**SQM48.497B9**	7	30	20	20	420
S55451-D302-A100	**SQM48.697B9**	7	60	35	35	800

Legend

1) Refer to «Dimensions»
2) With operating voltage applied
3) Under nominal conditions 20 °C. Under extreme conditions (below –15 °C ambient temperature), the available torque is about 15 % lower
4) Under nominal conditions 20 °C. Under extreme conditions (above +50 °C ambient temperature), the torque is about 15 % lower

Accessories

Accessories must be ordered as separate items.



Proportional controlling element with mounting plate **VKP...**
Proportional controlling element for mounting between threaded flanges in gas trains.
See Data sheet N7646.



Mounting plate **ASK33.1**
Article no.: **BPZ:ASK33.1**
For mounting the SQM45.295x9 on the proportional controlling element VKP.
Refer to Mounting Instructions 74 319 0843 0 (M7646)



Mounting kit **ASK33.4**
Article no.: **BPZ:ASK33.4**
For mounting of SQM45.295x9 on VKF41.xxC butterfly valve.
Refer to Mounting Instructions 74 319 0916 0 (M7813/7814)



CAN bus connecting cable **AGG5.641**
Article no.: **BPZ:AGG5.641**

- Between LMV5... and system components
- Shielded 5-core cable
- Cable length 100 m
- 2 x 1,25 mm² + 1 x 0,5 mm² + 2 x 0,25 mm²



CAN bus connecting cable **AGG5.631**
Article no.: **BPZ:AGG5.631**

- Between LMV5... and system components
- Shielded 5-core cable
- Cable length 100 m
- 3 x 0,5 mm² + 2 x 0,25 mm²



Separable cable entry (packed in sets of 50) **AGG5.812**
Article no.: **BPZ:AGG5.812**

☞ Note!
Specified connecting cables are mandatory!

Accessories must be ordered as separate items.

Connector set **AGG5.720**

Article no.: **BPZ:AGG5.720**

Standard connector set LMV5 for gas applications / oil applications with up to 3 actuators

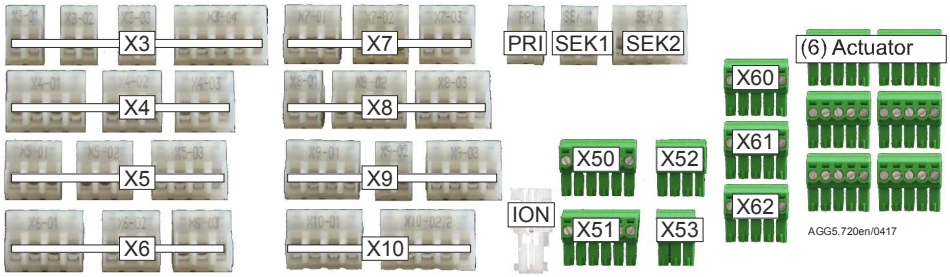

Connector set **AGG5.721**

Article no.: **BPZ:AGG5.721**

Extension connector set LMV5 (complementing AGG5.720, all connector versions are covered)



Transformer
AGG5.2…



Flame detector
QRB…

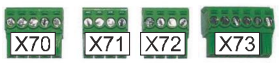

- Variable speed drive
- Fuel meter

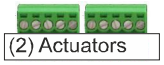

Actuator
SQM45…
SQM48…

Example



Single connectors **AGG9.853**

Article no.: **BPZ:AGG9.853**

- Connector type RAST3.5
- 5-pole
- Packing unit 200 in total

Technical data

Actuator	Operating voltage	2 x 12 V~ via bus cable from the basic unit or via a separate transformer
	Drive motor	Stepper motor
	Power consumption	
	- SQM45...	9...15 VA
	- SQM48...	26...34 VA
	Angular adjustment	Max. 90°
	Mounting position	Optional
	Degree of protection	To EN 60529, IP54, provided adequate cable entries are used
	Safety class	III according to DIN EN 60730 part 1 and part 2-14
	External overload fuse	Max. 4 AT (slow) to DIN EN 60127-2/5
	Cable entry	SQM45... / SQM48...: Insertable threaded cable glands for 2 x M16
	Direction of rotation (when facing the shaft)	
	• Standard	Counterclockwise
	• Reverse	Clockwise
	Torques and holding torques	Refer to «Type summary»
	Running times	Refer to «Type summary» (can be selected on the basic unit)
	Drive shaft	Supplied as standard, not replaceable
	Weight	
	• SQM45...	Approx. 1 kg
	• SQM48...	Approx. 1.6 kg
	Temperature of the mounting surface	Max. 60 °C
	Life cycle	250,000 start cycles (CLOSE ⇨OPEN ⇨CLOSE) under load with the rated torque in the entire rotation angle range. 2,000,000 control cycles under load with 75% of rated torque in rotation angle range of 10°.
	On time	50 %, max. 3 min. continuously
	Electrical connections	RAST3.5 terminals (for details, refer to the basic unit)
	Ferrules	Matching the dia. of the stranded wire
	Direction of rotation	Can be selected on the basic unit
	Reproducibility (typically in the show-room condition)	± 0.2° (when used with the basic unit LMV5...)

Environment conditions

Storage	DIN EN 60721-3-1
Climatic conditions	Class 1K3
Mechanical conditions	Class 1M2
Temperature range	-20...+60 °C
Humidity	<95 % r.h.
Transport	DIN EN 60721-3-2
Climatic conditions	Class 2K2
Mechanical conditions	Class 2M2
Temperature range	-20...+70 °C
Humidity	<95 % r.h.
Operation	DIN EN 60721-3-3
Climatic conditions	Class 3K3
Mechanical conditions	Class 3M3
Temperature range	-20...+60 °C
Humidity	<95 % r.h.
Installation altitude	Max. 2,000 m above sea level



Warning!
Condensation, formation of ice and ingress of water are not permitted!
If this is not observed, there is a risk of loss of safety functions.

Function

The actuators SQM45... / SQM48... are of robust design and have a gear train with only small backlash.
Control and position feedback take place via a bus system (CAN).
The bus cable is also used for powering the actuators.
The actuators are driven by stepper motors and can be positioned with a resolution of 0.1°.
The characteristics and settings (running time, direction of rotation, limit positions) of the SQM4... are determined by the controlling basic unit (e.g. LMV5...; for details, refer to the Basic Documentation P7550 of the LMV5...).
The running times of the associated controlling elements are varied by the basic unit depending on the burner's control phase (e.g. startup phase: short running time; operation: long running time).

Terminating resistor

At the end of the serial bus cabling, a terminating resistor must be fitted.
For that purpose, a jumper must be set to BUS TERMINATION on the last actuator of the bus cable, which will activate the resistor.
On all the other actuators, that jumper must be set to the other position (deactivated).

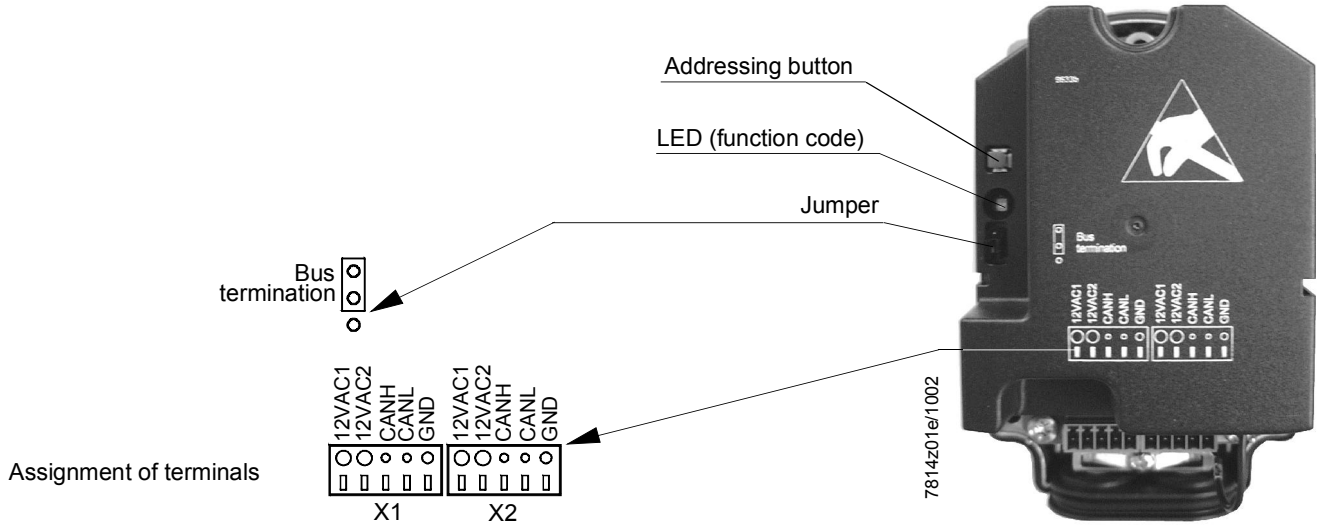

The 2 terminal blocks (X1 and X2) are identical.

Dimensions

Dimensions in mm

SQM45... / SQM48...

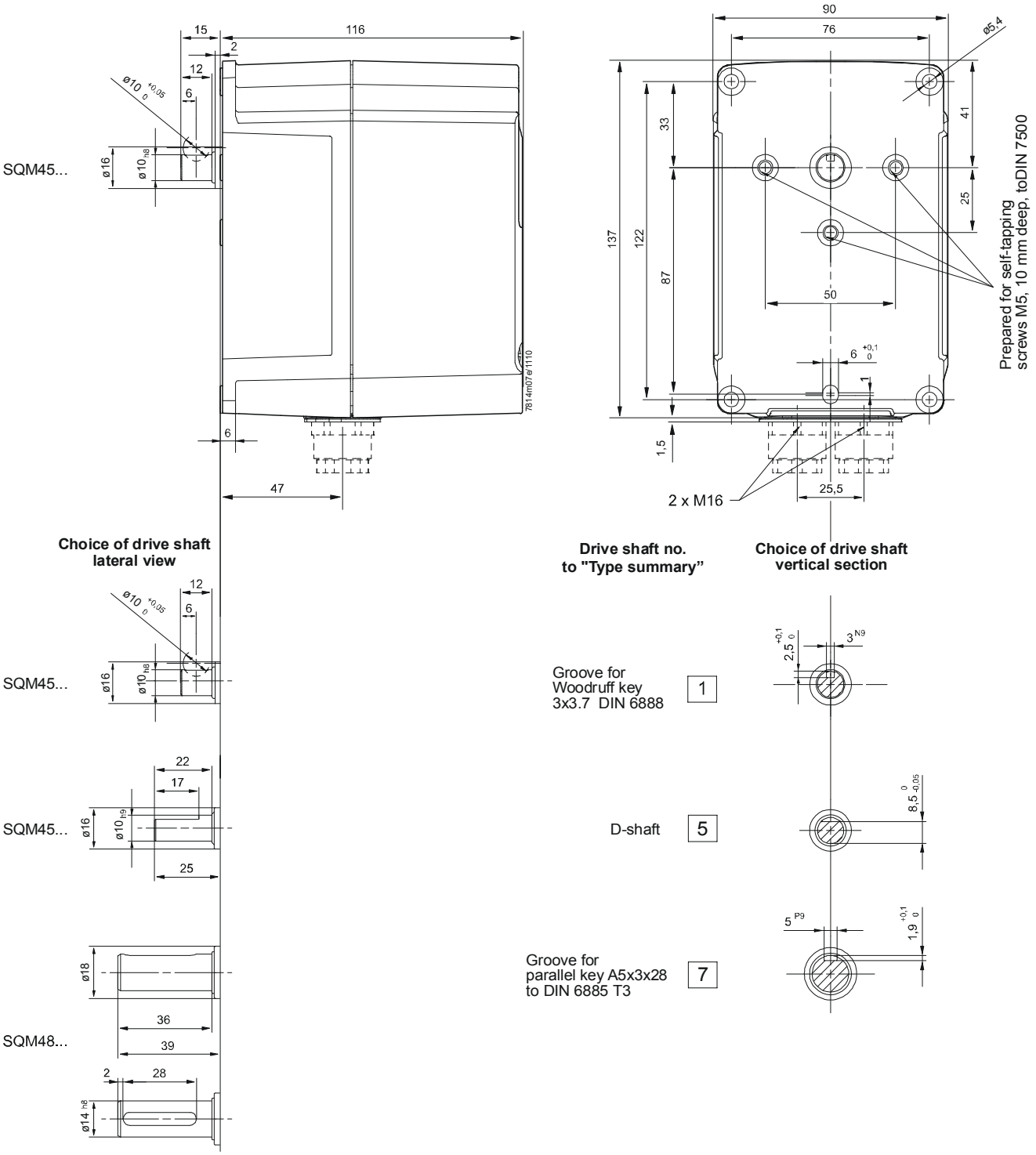

©2018 Siemens AG Building Technologies, Berliner Ring 23, D-76437 Rastatt
Subject to change!