SIEMENS

SIMATIC

Distributed I/O devices
BusAdapter for Distributed I/O

Manual

Security information 1

Preface 2

Installation 3

Maintenance 4

Diagnostics 5

Pin assignments A

Technical specifications B

Valid for ET 200SP HA and Compact Field Unit

2017
A5E39261458-AA

Legal information

Warning notice system

This manual contains notices you have to observe in order to ensure your personal safety, as well as to prevent damage to property. The notices referring to your personal safety are highlighted in the manual by a safety alert symbol, notices referring only to property damage have no safety alert symbol. These notices shown below are graded according to the degree of danger.

⚠ DANGER

indicates that death or severe personal injury **will** result if proper precautions are not taken.

⚠ WARNING

indicates that death or severe personal injury **may** result if proper precautions are not taken.

⚠ CAUTION

indicates that minor personal injury can result if proper precautions are not taken.

NOTICE

indicates that property damage can result if proper precautions are not taken.

If more than one degree of danger is present, the warning notice representing the highest degree of danger will be used. A notice warning of injury to persons with a safety alert symbol may also include a warning relating to property damage.

Qualified Personnel

The product/system described in this documentation may be operated only by **personnel qualified** for the specific task in accordance with the relevant documentation, in particular its warning notices and safety instructions. Qualified personnel are those who, based on their training and experience, are capable of identifying risks and avoiding potential hazards when working with these products/systems.

Proper use of Siemens products

Note the following:

⚠ WARNING

Siemens products may only be used for the applications described in the catalog and in the relevant technical documentation. If products and components from other manufacturers are used, these must be recommended or approved by Siemens. Proper transport, storage, installation, assembly, commissioning, operation and maintenance are required to ensure that the products operate safely and without any problems. The permissible ambient conditions must be complied with. The information in the relevant documentation must be observed.

Trademarks

All names identified by ® are registered trademarks of Siemens AG. The remaining trademarks in this publication may be trademarks whose use by third parties for their own purposes could violate the rights of the owner.

Disclaimer of Liability

We have reviewed the contents of this publication to ensure consistency with the hardware and software described. Since variance cannot be precluded entirely, we cannot guarantee full consistency. However, the information in this publication is reviewed regularly and any necessary corrections are included in subsequent editions.

Siemens AG
Division Process Industries and Drives
Postfach 48 48
90026 NÜRNBERG
GERMANY

A5E39261458-AA
℗ 05/2017 Subject to change

Copyright © Siemens AG 2017.
All rights reserved

Table of contents

1 Security information 5

2 Preface 7

3 Installation 9

3.1 BusAdapter BA 2xRJ45 10

3.2 BusAdapter BA 2xFC 12

3.3 BusAdapter BA 2xLC 16

4 Maintenance 21

4.1 Exchanging the BusAdapter or interface of the distributed I/O 21

5 Diagnostics 23

5.1 Diagnostics via LED displays 23

A Pin assignments 25

A.1 Pin assignment of the RJ45 connection plug 25

A.2 Pin assignment of the FC outlet (4-pin connector) 25

B Technical specifications 27

B.1 SIMATIC BusAdapter BA 2xRJ45 (6DL1193-6AR00-0AA0) 27

B.2 SIMATIC BusAdapter BA 2xFC (6DL1193-6AF00-0AA0) 28

B.3 SIMATIC BusAdapter BA 2xLC (6DL1193-6AG00-0AA0) 29

Index 31

Security information

1

Siemens provides products and solutions with industrial security functions that support the secure operation of plants, systems, machines, and networks.

In order to protect plants, systems, machines and networks against cyber threats, it is necessary to implement – and continuously maintain – a holistic, state-of-the-art industrial security concept. Siemens' products and solutions only form one element of such a concept.

Customer is responsible to prevent unauthorized access to its plants, systems, machines and networks. Systems, machines and components should only be connected to the enterprise network or the internet if and to the extent necessary and with appropriate security measures (e.g. use of firewalls and network segmentation) in place.

Additionally, Siemens' guidance on appropriate security measures should be taken into account. For more information about industrial security, please visit:

http://www.siemens.com/industrialsecurity.

Siemens' products and solutions undergo continuous development to make them more secure. Siemens strongly recommends to apply product updates as soon as available and to always use the latest product versions. Use of product versions that are no longer supported, and failure to apply latest updates may increase customer's exposure to cyber threats.

To stay informed about product updates, subscribe to the Siemens Industrial Security RSS Feed under

http://www.siemens.com/industrialsecurity.

Preface

2

Purpose of the documentation

This documentation explains the use of the BusAdapters for PROFINET IO.

You can find information about the electrical and optical networks (including cables and cable lengths) in the system manual "SIMATIC NET; Industrial Ethernet / PROFINET; Passive Network Components (https://support.industry.siemens.com/cs/ww/en/view/84922825)".

Validity of the documentation

This documentation applies to the following products:

- Distributed I/O System ET 200SP HA
- Compact Field Unit (CFU)

Special information

Note

Important note for maintaining operational safety of your plant

Plants with safety-related features are subject to special operational safety requirements on the part of the operator. Even suppliers are required to observe special measures during product monitoring. This is why we inform you about product developments and features that are or may become important for the operation of plants with regard to safety in a special newsletter.

To ensure you are always up to date in this regard and can make changes to your system, if necessary, you need to subscribe to the corresponding newsletter.

Recycling and disposal

The products are low in pollutants and can be recycled. For environmentally compliant recycling and disposal of your electronic waste, please contact a company certified for the disposal of electronic waste.

Additional support

- Information about the technical support available can be found in the appendix to this documentation (http://www.siemens.com/simatic-tech-doku-portal).
- The technical documentation for the individual SIMATIC products and systems is available on the Internet (https://mall.industry.siemens.com).
- The online catalog and the ordering system are available on the Internet (https://mall.industry.siemens.com).

Notifications – Always up-to-date with "mySupport"

In Industry Online Support, you can set "Filters" for various individual topics of interest (e.g. topics, configurations, products, etc.) or mark specific articles as "Favorites". To not have to check for yourself whether there is news or changes to these topics of interest, you can receive notifications from the Online Support, for example, by email.

You access this service on the following pages on the Internet (http://support.industry.siemens.com/My/ww/en/notifications).
You will find the following information in the header:

- **Language**: Language selection for "mySupport" page
- **Contact**: "Global and regional contacts"
- **Help:** Help for "mySupport" page
- **Support Request**: Requests submitted to technical specialists

Installation

3

Installing a PROFINET cable on the BusAdapter

Depending on the configuration of the PROFINET IO system, you select electrical or optical PROFINET IO cables for the connection of the distributed I/O.

- Electrical PROFINET IO cables:
  - PROFINET cable with RJ45 connector (electrical)
  - Connecting a FastConnect cable directly to the BusAdapter (electrical)
- Optical PROFINET IO cables:
  - Fiber-optic cable with FO connector (optical)

The type of connecting cable determines the BusAdapter required for connecting the distributed I/O.

Note

Strain relief of the bus cables

Make sure to secure the bus cables by installing an appropriate strain relief. Refer to the installation guidelines of the manufacturer.

Additional information

The documentation of the distributed I/O contains information on released BusAdapters. Information on the bus cables is available in the system manual SIMATIC NET Industrial Ethernet / PROFINET Passive Network Components (https://support.industry.siemens.com/cs/ww/en/view/84922825).

See also

BusAdapter BA 2xRJ45 (Page 10)

BusAdapter BA 2xFC (Page 12)

BusAdapter BA 2xLC (Page 16)

3.1 BusAdapter BA 2xRJ45

Introduction

Plug	Front view	Description
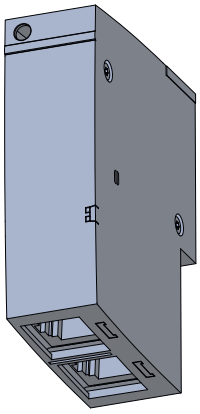	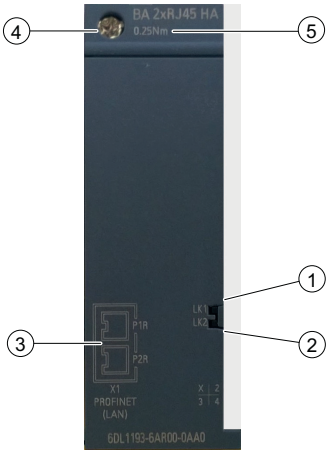	① LED LK 1 - monitoring port 1 ② LED LK 2 - monitoring port 2 ③ Connection diagram for the PROFINET connectors (view from below) ④ Fixing screw ⑤ Tightening torque

You connect the IO device to the PROFINET IO system via the BusAdapter BA 2×RJ45 with Industrial Ethernet cables.

You can loop through PROFINET IO via the integrated 2-port switch.

Refer to the specifications in the PROFINET Installation Guide (http://www.profibus.com).

Required tools

Screwdriver:

- TORX T10
  or
- 3.5 mm blade width

Installing the RJ45 connector

Install the RJ45 plug according to the information in the PROFINET Installation Guide (http://www.profibus.com).

You can use FastConnect cables with the "IE FC RJ45 Plug 180" connector when installed in an enclosure.
You can find information on this in the system manual "SIMATIC NET; Industrial Ethernet / PROFINET; Passive Network Components (https://support.industry.siemens.com/cs/ww/en/view/84922825)".

Installing a BusAdapter to distributed I/O

To connect PROFINET IO to the device via the BusAdapter BA 2xRJ45, proceed as follows:

1. Plug in the BusAdapter and screw it tight.
2. Insert the RJ45 connector(s) into the PROFINET port on BusAdapter BA 2×RJ45.
3. Secure the PROFINET IO cable to protect the plug from pulling.

Installing BusAdapter BA 2×RJ45

Note

The figure below is a basic representation using the ET 200SP HA as an example; it is also valid for other distributed I/O devices.

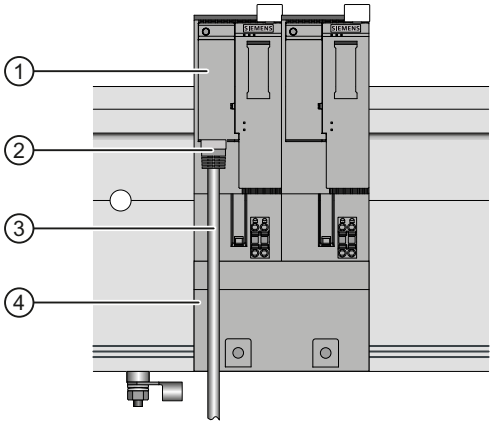

① BusAdapter BA 2×RJ45
② RJ45 connector
③ PROFINET IO cable
④ Interface module

Figure 3-1 Connecting a PROFINET IO cable to the device via BusAdapter BA 2×RJ45

Note

Configuration guidelines for modules with PROFINET IO interfaces

You may only operate the modules with PROFINET IO interfaces in LANs (Local Area Networks) if all connected nodes are equipped with SELV/PELV power supplies (or have equivalent protection).

A data transfer terminal that guarantees this level of safety must be used for the interface to the WAN (Wide Area Network).

3.2 BusAdapter BA 2xFC

Introduction

Plug	Front view	Description
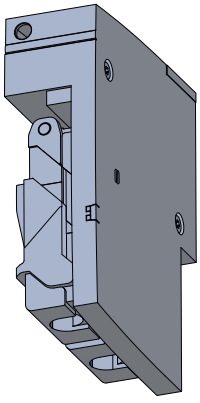	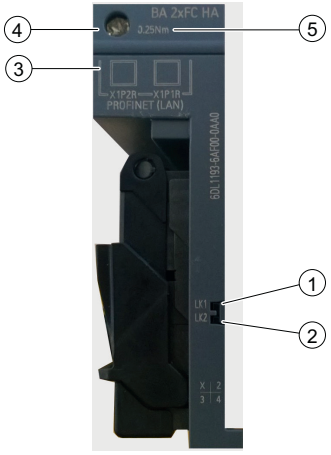	① LED LK 1 - monitoring port 1 ② LED LK 2 - monitoring port 2 ③ Connection diagram for the PROFINET connectors (view from left) ④ Fixing screw ⑤ Tightening torque

You connect the IO device to the PROFINET IO system via the BusAdapter BA 2×FC with FastConnect cables.
You can loop through PROFINET IO via the integrated 2-port switch.

Refer to the specifications in the PROFINET Installation Guide (http://www.profibus.com).

Required tools

Screwdriver:

- TORX T10
  or
- 3.5 mm blade width

Required accessories

- If you are using FastConnect cables, we recommend you use the Industrial Ethernet FastConnect stripping tool (6GK1901-1GA00) with blade cassette green (6GK1901-1B...). This guarantees fast and safe stripping.
- FastConnect cables (recommended types):
  - IE FC TP Standard Cable GP 2x2 (6XV1840-2AH10)
  - IE FC TP Trailing Cable 2x2 (6XV1840-3AH10)
  - IE FC TP Marine Cable (6XV1840-4AH10)
  - IE FC TP Flexible Cable GP 2x2 (6XV1870-2B)
  - IE FC TP Trailing Cable 2x2 (6XV1870-2D)
  - IE TP Torsion Cable 2x2 (6XV1870-2F)
  - FC TP FRNC Cable GP (6XV1871-2F)
  - IE FC TP Food Cable GP 2x2 (6XV1871-2L)
  - IE FC TP Festoon Cable 2x2 (6XV1871-2S)

Preparation

1. Remove the BusAdapter BA 2xFC from the I/O.
2. Strip the jacket of the PROFINET connecting cable as follows:

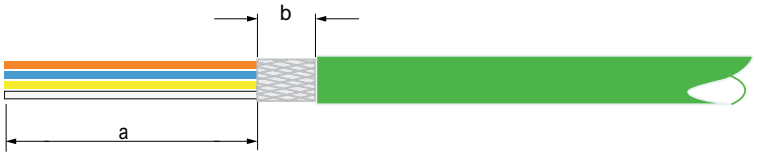

Stripping length (outer jacket)	Length of the remaining braided shield
Distance a: 25 mm +-1 mm	Distance b: 5 mm

Figure 3-2 Stripping lengths PROFINET connecting cable

Installing a BusAdapter to distributed I/O

To connect the PROFINET IO to the device via the BusAdapter BA 2xFC, proceed as directed in the following figures:

Table 3-1 Objects in the figures

Object	Marking in the figures
Locking slide	I
Wire guide	II
Shield contact	III
PROFINET connecting cable	IV

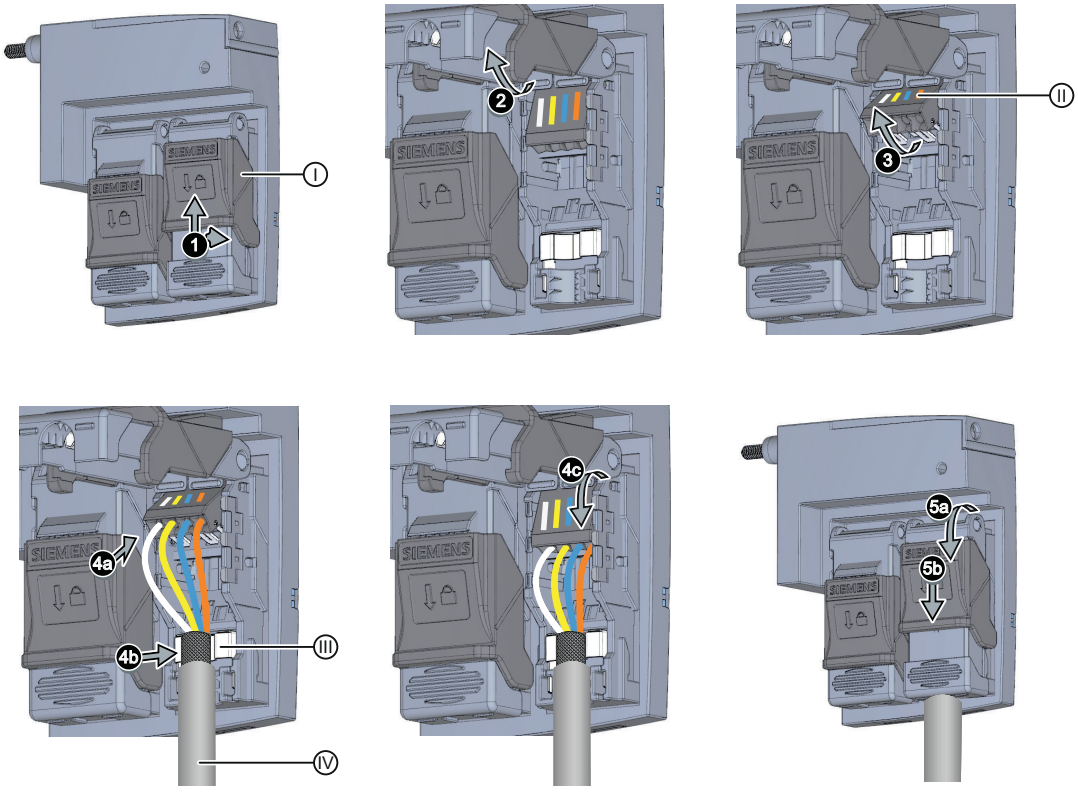

Connecting the cable to the BusAdapter

① Push back the locking slide.

② Open the cover of the connection element.

③ Flip up the wire guide until it stops.

④ 4a Insert the **insulated** single wires of the PROFINET IO cable (according to the printed color coding) all the way into the wire guide.

4b Lay the cable shield on the shield contact.

4c Flip the wire guide firmly down until it stops.

⑤ 5a Close the cover of the connection element.

5b Slide the locking slide forward until it stops.

Figure 3-3 Connecting the PROFINET IO cable to the BusAdapter BA 2×FC

1. Install the FC cable to the BusAdapter.
2. Plug in the BusAdapter and screw it tight.
3. Secure the PROFINET IO cable to protect the plug from pulling.

Installing BusAdapter BA 2×FC

Note

The figure below is a basic representation using the ET 200SP HA as an example; it is also valid for other distributed I/O devices.

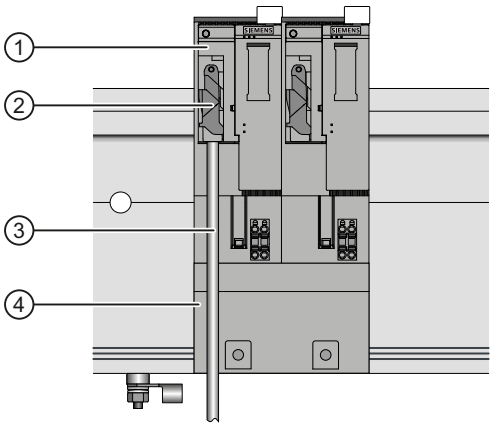

① BusAdapter BA 2×FC
② FC connection element
③ PROFINET IO cable
④ Interface module

Figure 3-4 Connecting a PROFINET IO cable to the device via BusAdapter BA 2×FC

Note

Configuration guidelines for modules with PROFINET IO interfaces

Only when all connected nodes are equipped with a SELV/PELV power supply (or have equivalent protection) is it permitted to operate the modules with PROFINET IO interfaces in LANs (Local Area Networks).

A data transfer point is prescribed for connection to the WAN (Wide Area Network) that guarantees this degree of safety.

Additional information

System manual "SIMATIC NET; Industrial Ethernet / PROFINET; Passive Network Components (https://support.industry.siemens.com/cs/ww/en/view/84922825)"

See also

PROFINET Installation Guide (http://www.profibus.com)

3.3 BusAdapter BA 2xLC

Introduction

Plug	Front view	Description
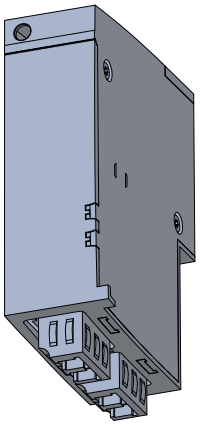	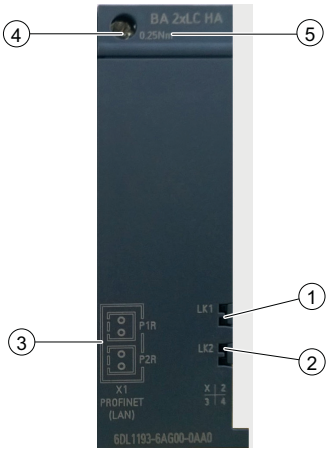	① LED LK 1 - monitoring port 1 ② LED LK 2 - monitoring port 2 ③ Connection diagram for the PROFINET connectors (view from below) ④ Fixing screw ⑤ Tightening torque

You connect the IO device to the PROFINET IO system via the BusAdapter BA 2×LC with fiber-optic cables.
You can loop through PROFINET IO optically via the integrated 2-port switch.

Refer to the specifications in the PROFINET Installation Guide (http://www.profibus.com).

Derating with redundant configuration

If you use the BusAdapter BA 2xLC in a redundant configuration of an ET 200SP HA with 2 interface modules, an additional reduction of the permissible ambient temperature must be observed (see section "Technical specifications"; "SIMATIC BusAdapter BA 2xLC (6DL1193-6AG00-0AA0) (Page 29)").

Required accessories

- If you are fabricating the IE FC FO Cable with the IE FC FO plug, we recommend you use the FC FO termination kit; for FC LC plug. You precisely break (cleave) the glass fibers with the supplied tool.

⚠ CAUTION
Cleaving the glassfiber • Wear protective glasses during the cleaving process. • Dispose of the remaining fibers in a suitable waste container.

- LC plug connector for PROFINET connection: IE FC LC Plug (10 duplex plugs: 6GK1900-1RB00-2AB0)
- Cables

Cable type	Article number
FO Standard Cable GP (62.5/200/230)	6XV1847-2A
FO Trailing Cable (62.5/200/230)	6XV1847-2C
FO Standard Cable GP (GP 50/125/1400)	6XV1873-3Axx
FO Robust Cable GP (4E9/125/90)	6XV1873-5Rxx

Maximum length of the PROFINET IO cables: 3 km

Requirements

- Fabricate the PROFINET IO cables (connect fiber-optic cables to LC plug connectors). You can find information about the tools required for specific cables in the system manual "SIMATIC NET; Industrial Ethernet / PROFINET; Passive Network Components (https://support.industry.siemens.com/cs/ww/en/view/84922825)".
- If the device is the last node of the FOC network, you need to terminate the unoccupied FOC interface with a blanking plug. When the modules ship, the blanking plugs are inserted in the PROFINET sockets of the BusAdapter.

NOTICE
Derating when using a redundant ET 200SP HA When using a redundant ET 200SP HA, read the information about the permissible ambient temperature.

Required tools

Screwdriver:

- TORX T10
  or
- 3.5 mm blade width

Installing a BusAdapter to distributed I/O

To connect PROFINET IO to the device via the BusAdapter BA 2xLC, proceed as follows:

1. Plug in the BusAdapter and screw it tight.
2. Remove the protective caps of the LC plug connector, if present.
3. Grasp the assembled LC plug connector on the enclosure and insert it into the PROFINET socket on the BusAdapter BA 2XLC until it clicks. The LC plug connectors are coded to ensure correct connection.

> **⚠ CAUTION**
>
> **Risk of damage to eyes**
>
> Do not look directly into the opening of the optical transmitter diodes. The emitted light beam could damage your eyes.

4. Secure the PROFINET IO cable to protect the plug from pulling.

Installing BusAdapter BA 2xLC

Note

The figure below is a basic representation using the ET 200SP HA as an example; it is also valid for other distributed I/O devices.

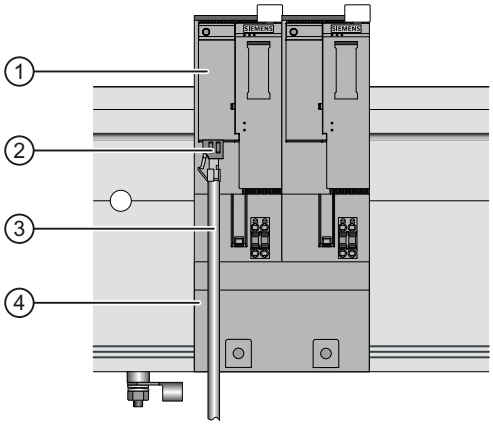

① BusAdapter BA 2xLC
② LC connector
③ PROFINET IO cable: Fiber-optic cable
④ Interface module

Figure 3-5 Connecting a PROFINET IO cable to the device via BusAdapter BA 2×LC

Additional information

You can find information about the installation guidelines and installation of fiber optic cables in the documentation "SIMATIC NET; Industrial Ethernet / PROFINET; Passive Network Components (https://support.industry.siemens.com/cs/ww/en/view/84922825)".

See also

PROFINET Installation Guide (http://www.profibus.com)

Maintenance

4

4.1 Exchanging the BusAdapter or interface of the distributed I/O

The device name of the distributed I/O device is saved at the following locations when transferring the device name to the distributed I/O:

- In the BusAdapter
- In the interface of the distributed I/O device (e.g. interface module or I/O device itself)

Note

Replacing a BusAdapter (removing/inserting)

Removing/inserting the BusAdapter under voltage is prohibited.

Device replacement without transfer of topological configuration

The following scenarios are the result of saving the device name on the BusAdapter and in the interface when exchanging the two components:

	Interface non-programmed (without device name)	Interface with device name
BusAdapter non-programmed (without device name)	No device names	When the supply voltage is switched on, the device name is copied from the interface to the BusAdapter.
BusAdapter with device name	When the supply voltage is switched on, the device name is copied from the BusAdapter to the interface.	

Note

Restoring the factory settings

Not possible for ET 200SP HA:
The reset to factory settings deletes the device name in the interface and in the BusAdapter.

Avoiding deleting of the device name in the BusAdapter:
Proceed as follows:

1. Pull the BusAdapter from the distributed I/O device.
2. Restore the factory settings of the distributed I/O device.

Diagnostics

5

5.1 Diagnostics via LED displays

Below, you will find tables containing information on the status and error messages on the BusAdapter.

LEDs on the BusAdapter

The following LEDs are located on the front of the BusAdapter.

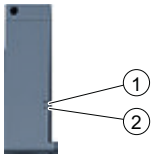

	Marking	Color	Meaning	Brief description
①	LK1	Green	LED for status display on the BusAdapter	Connection status
②	LK2			

Table 5-1 Legend for the following tables:

■ LED lit

Off LED not lit

LED displays on the BusAdapter

Table 5-2 Status display "LK1" and "LK2" on the BusAdapter

LEDs "LK1" and "LK2"	Meaning	Solution
■ ON	There is an Ethernet connection between the PROFINET IO interface and a communication partner (for example, an IO controller).	-
Off	There is no Ethernet connection between the PROFINET IO interface and a communication partner (for example IO controller).	Check whether the bus cable to the switch/IO controller is interrupted.

Pin assignments

A

A.1 Pin assignment of the RJ45 connection plug

Table A-1 Pin assignment of the RJ45 connector

View RJ45-plug socket	Contact	assignment
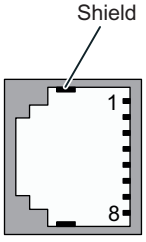	1	RD (Receive Data +)
	2	RD_N (Receive Data –)
	3	TD (Transmit Data +)
	4	Ground
	5	Ground
	6	TD_N (Transmit Data –)
	7	Ground
	8	Ground

A.2 Pin assignment of the FC outlet (4-pin connector)

Table A-2 Pin assignment of the FC outlets

View of FC outlet	Contact		Color	Assignment (from left to right)
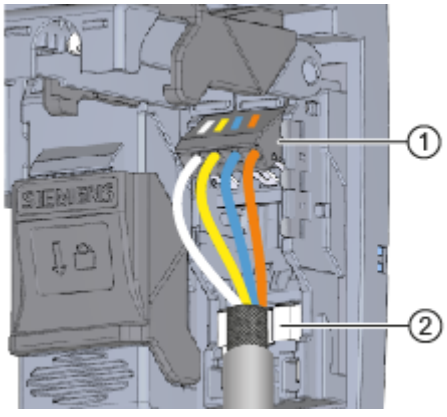	①	1	White	TX+ (Transmit Data +)
		2	Yellow	RX+ (Receive Data +)
		3	Blue	TX- (Transmit Data -)
		4	Orange	RX+ (Receive Data -)
	②			GND (functional earth - FE)

Technical specifications

B

B.1 SIMATIC BusAdapter BA 2xRJ45 (6DL1193-6AR00-0AA0)

Article number	6DL1193-6AR00-0AA0
Interfaces	
Number of PROFINET interfaces	1; 2 ports (switch) RJ45
PROFINET IO	
• RJ 45	Yes; 2x RJ45
Cable length	
– Cu conductors	100 m
Ambient conditions	
Ambient temperature during operation	
• min.	-40 °C
• max.	70 °C
Dimensions	
Width	20 mm
Height	69.5 mm
Depth	59 mm
Weights	
Weight, approx.	46 g

B.2 SIMATIC BusAdapter BA 2xFC (6DL1193-6AF00-0AA0)

Article number	6DL1193-6AF00-0AA0
Interfaces	
Number of PROFINET interfaces	1; 2 ports (switch) FC
PROFINET IO	
• FC (FastConnect)	Yes; 2 x
Cable length	
– Cu conductors	100 m
Ambient conditions	
Ambient temperature during operation	
• min.	-40 °C
• max.	70 °C
Dimensions	
Width	20 mm
Height	69.5 mm
Depth	59 mm
Weights	
Weight, approx.	53 g

B.3 SIMATIC BusAdapter BA 2xLC (6DL1193-6AG00-0AA0)

Article number	**6DL1193-6AG00-0AA0**
Interfaces	
Number of PROFINET interfaces	1; 2 ports (switch) LC Multimode Glass Fibre
PROFINET IO	
• Number of LC ports	2
Cable length	
– Multimode graded-index fiber 50/125 µm	3 km
– Multimode graded-index fiber 62.5/125 µm	3 km
Ambient conditions	
Ambient temperature during operation	
• min.	-40 °C
• max.	65 °C; Redundant design (2x 6DL1155-6AU00-0PM0): max. 60 °C horizontal, max. 50 °C vertical. When using different I/O devices, the derating specified there must be observed.
Dimensions	
Width	20 mm
Height	75 mm; Without protective caps (approx. 8 mm)
Depth	59 mm
Weights	
Weight, approx.	60 g

Index

B

BusAdapter
BA 2xLC, 16
BA 2×FC, 12
Connect BA 2xRJ45, 10

C

Connecting
BA 2xRJ45 on interface module, 10
BA 2×FC on the interface module, 12
BA 2×LC on the interface module, 16

P

Pin assignment
FC outlet, 25
RJ45 connector, 25
PROFINET IO
Connecting BusAdapter BA 2xRJ45, 10
Connecting BusAdapter BA 2×FC, 12
Connecting BusAdapter BA 2×LC, 16