SIEMENS

Data sheet 3VA6816-6HL31-0AA0



circuit breaker 3VA6 UL frame 1600 breaking capacity class H 65kA @ 480 V 3-pole, line protection ETU320, LI, In=1600A overload protection Ir=600A - 1600A short circuit protection Ii=1,5-7,5 x In w/o connection

Model	
product brand name	SENTRON
product designation	Molded-case circuit breaker
product designation / according to UL file	HPAE
design of the product	System protection
design of the load switch / according to UL 489 / Heating, Air Conditioning, and Refrigeration circuit breaker (HACR Type)	Yes
design of the overcurrent release	ETU320
protection function of the overcurrent release	LI
number of poles	3
General technical data	
insulation voltage / rated value	800 V
operating voltage / at AC / rated value	600 V
power loss [W] / maximum	433 W
power loss [W] / for rated value of the current / at AC / in hot operating state / per pole	433 W
mechanical service life (operating cycles) / typical	3 000
electrical endurance (operating cycles) / at AC-1 / at 380/415 V	1 500
electrical endurance (operating cycles) / at AC-1 / at 690 V	500
electrical endurance (operating cycles) / at 480 V	1 500
electrical endurance (operating cycles) / at 600 V	500
product feature / for neutral conductors / upgradable/retrofittable / short-circuit and overload proof	No
ground-fault monitoring version	without
product function	
● communication function	No
● other measurement function	No
Net Weight	25.81 kg
Current	
marking / according to UL 489 / 100%-rated breaker	No
operational current	
● at 40 °C	1 600 A
● at 45 °C	1 600 A
● at 50 °C	1 600 A
● at 55 °C	1 568 A
● at 60 °C	1 536 A
● at 65 °C	1 504 A
● at 70 °C	1 472 A
Switching capacity according to IEC 60947	
switching capacity class of the circuit breaker	H
maximum short-circuit current breaking capacity (Icu)	

Subject to change without notice
© Copyright Siemens

● at 240 V	110 kA
● at 415 V	70 kA
● at 690 V	30 kA
operating short-circuit current breaking capacity (Ics)	
● at 240 V	55 kA
● at 415 V	35 kA
● at 690 V	15 kA
short-circuit current making capacity (Icm)	
● at 240 V	242 kA
● at 415 V	154 kA
● at 690 V	63 kA
Switching capacity according to UL 489	
current breaking capacity	
● at 240 V	100 kA
● at 480 V	65 kA
● at 600 V	35 kA
Adjustable parameters	
adjustable response value setting current (Ir) / of the L-trip / with I2t characteristic	
● minimum	600 A
● maximum	1 600 A
adjustable response value delay time (tr) / for L-tripping / with I2t characteristic	
● minimum	2.5 s
● maximum	30 s
adjustable response value setting current (Ii) / for I-tripping	
● minimum	2 400 A
● maximum	12 000 A
adjustable current response value current / of instantaneous short-circuit trip unit	
● minimum	2 400 A
● maximum	12 000 A
product function / grounding protection	No
Mechanical Design	
product component	
● undervoltage release	No
● trip indicator	No
height [in]	8.14 in
height	206.9 mm
width [in]	8.99 in
width	228.4 mm
depth [in]	16 in
depth	406.4 mm
Connections	
type of electrical connection / for main current circuit	without terminals
design of the surface / of the connections / on the top of the switch (N, 1, 3, 5)	silver
design of the surface / of the connections / on the bottom of the switch (N, 2, 4, 6)	silver
Auxiliary circuit	
number of CO contacts / for auxiliary contacts	0
Environmental conditions	
protection class IP / on the front	IP40
ambient temperature	
● during operation / minimum	-25 °C
● during operation / maximum	70 °C
● during storage / minimum	-40 °C
● during storage / maximum	80 °C
Certificates	
reference code / according to IEC 81346-2	F
certificate of suitability / as approval for NAVAL (no combat vessels) / supplement SB	No

© Copyright Siemens

General Product Approval

Confirmation

Miscellaneous

Test Certificates | other

Type Test Certificates/Test Report

Miscellaneous

Confirmation

Further information

Siemens has decided to exit the Russian market (see here).
https://press.siemens.com/global/en/pressrelease/siemens-wind-down-russian-business

Siemens is working on the renewal of the current EAC certificates.
Please contact your local Siemens office on the status of validity of the EAC certification if you intend to import or offer to supply these products to an EAC relevant market (other than the sanctioned EAEU member states Russia or Belarus).

Information on the packaging
https://support.industry.siemens.com/cs/ww/en/view/109813875

Information- and Downloadcenter (Catalogs, Brochures,…)
http://www.siemens.com/lowvoltage/catalogs

Industry Mall (Online ordering system)
https://mall.industry.siemens.com/mall/en/en/Catalog/product?mlfb=3VA6816-6HL31-0AA0

Service&Support (Manuals, Certificates, Characteristics, FAQs,...)
https://support.industry.siemens.com/cs/ww/en/ps/3VA6816-6HL31-0AA0

Image database (product images, 2D dimension drawings, 3D models, device circuit diagrams, ...)
http://www.automation.siemens.com/bilddb/cax_en.aspx?mlfb=3VA6816-6HL31-0AA0

CAx-Online-Generator
http://www.siemens.com/cax

Tender specifications
http://www.siemens.com/specifications

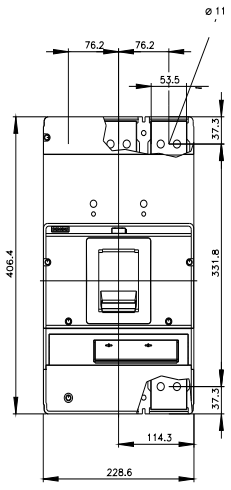

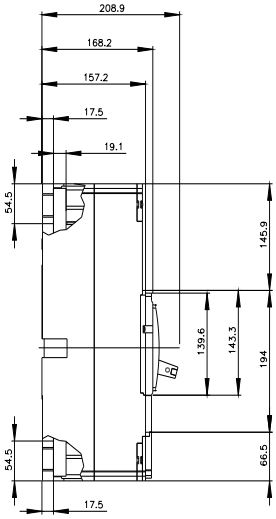

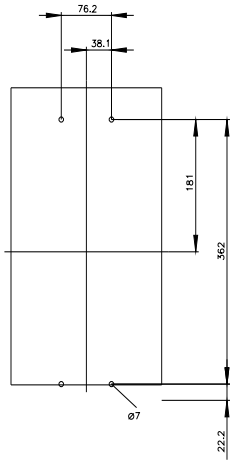

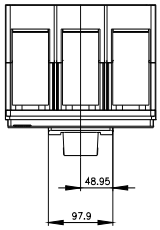

Subject to change without notice
© Copyright Siemens

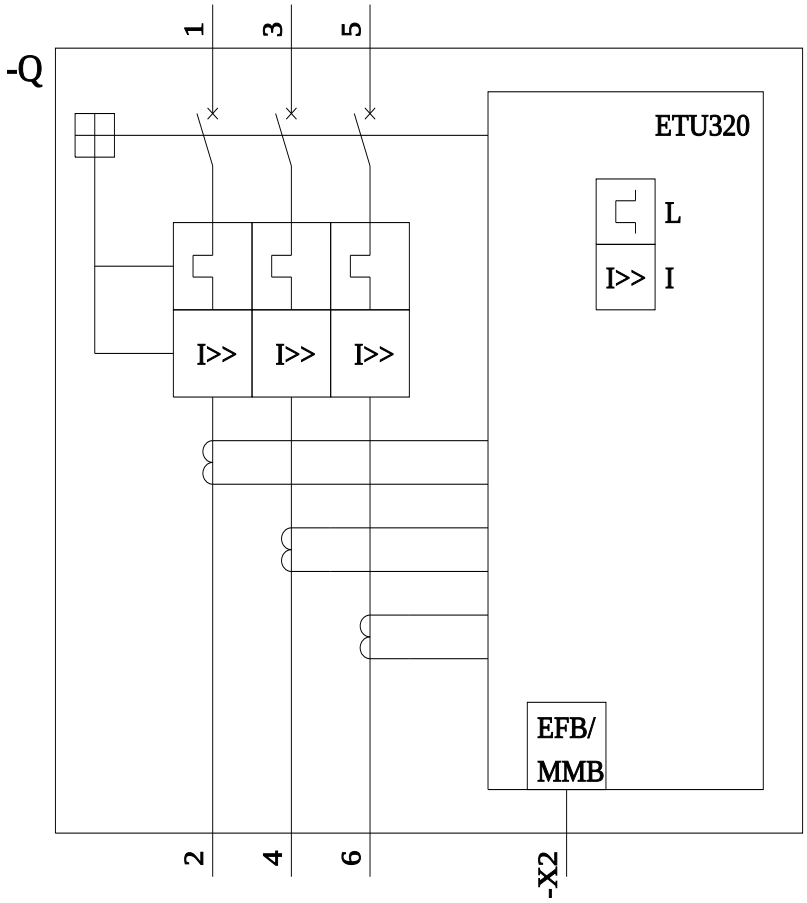

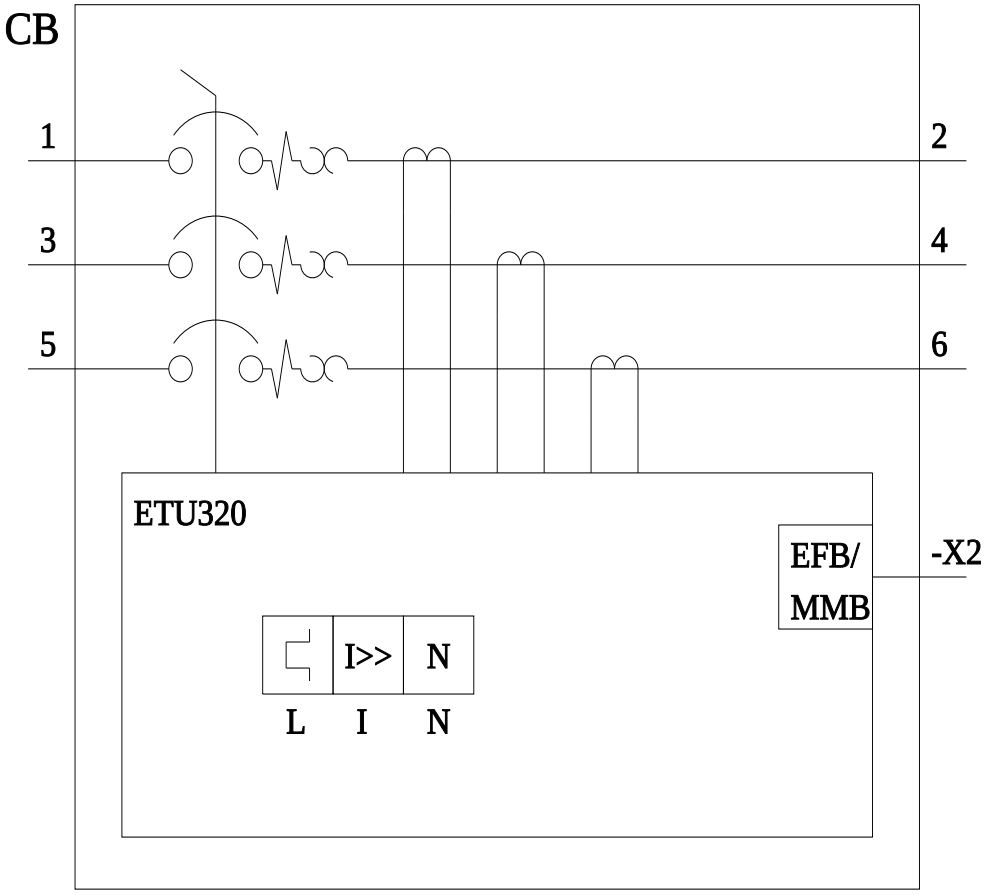

last modified: 4/19/2023

Subject to change without notice
© Copyright Siemens

Subject to change without notice
© Copyright Siemens