What's **new** in molded case circuit breakers:



New Sentron Sensitrip

Sentron Sensitrip IV ETU Circuit Breakers with Integrated DAS / Maintenance Mode

Design enhancements include:

- Upgraded ETU for NEC 240.87 code compliance (Arc Energy Reduction)
- Frame ratings from 400A to 1600A
- Identical footprint, kAIC ratings and accessory offering as legacy Sensitrip III ETU breakers to ease integration / retrofit
- Maintenance mode versions require customer-supplied 24V external power supply, maintenance switch and light

The New Siemens QR Circuit Breaker

Implemented in load centers, panelboards, switchboards, meter centers, and modular metering, the new QR breaker is the same form-factor/ mounting as QJ breaker for easy retrofit.

Design enhancements include:

- Trip unit ratings from 100A to 250A.
- Field installable internal accessories – shunt trip, aux switch or shunt/aux combo.
- Two accessory pockets in 3-pole breakers. One accessory pocket in 2-pole breakers.
- High in-rush current capability (450%).
- Push-to-trip button.



The new Siemens 3VA molded case circuit breakers



- 125A thru 800A Thermal Magnetic Trip breakers
- 150A thru 1000A Electronic Trip Circuit Breakers
- Extensive and flexible accessories
- Common internal accessories for the entire breaker family
- Power metering with the series-8 LCD electronic trip
- Illuminated rotary handles show switch position
- Smaller footprint than Sentron or VL breakers
- Enhanced Tools and Resources

The **Dual Function Circuit Breaker** combines GFCI and AFCI, protecting against both Arc Faults and Ground Faults. This, along with the new Self-Test & Lockout feature, makes it the first in class in electrical safety for homeowners.

- Faster Installation
- Cost savings
- Smaller Device
- Self Test & Lockout feature as required by UL 943 effective June 2015



The Siemens GG circuit breaker is a compact, industrial design thermal magnetic breaker with valuable features for the global markets. These features include a design that meets multi-national standards, is suitable for DIN rail or base mounting without the need for adapters, and includes UL listed field installable accessories. The GG also has an over center toggle mechanism that is trip free and uses repulsion contact arm construction. Therefore, should a short circuit or tripping condition occur, the contacts are forced apart and the breaker cannot be held closed by means of the handle.



NGB **NGG** **HGG** **LGG**

Ordering

In the FD through RD frames, you may order molded case circuit breakers three basic ways:

- As separately ordered frames, trip units and lugs
- As frame, trip unit and lugs ordered as one catalog number and shipped unassembled or assembled
- As Frame and Trip Unit shipped assembled and with the trip unit made non-removable, in compliance with UL 489 requirements that to be reverse fed the circuit breaker must not have an interchangeable trip unit.

These two options are described in the following:

Components Ordered Separately

To get the components for a 3-pole, 400 Amp standard interrupting circuit breaker, you would order the frame (JD63F400), the trip unit (JD63T400) and six lugs (TA2J6500). This option is normally useful only if you stock and use large volumes of product and wish to reduce your inventory cost. You may stock, for example, a smaller number of frames (JD63F400) and a variety of trip units (JD63T300, JD63T350, etc.) and assemble breakers as you need them.

Frame, Trip Unit and Lugs Ordered Together

If you order the catalog number JD63B400, you will receive a frame, a trip unit and 6 lugs in separate packages. By suffixing this number with "L" (e.g. JD63B400L), you will receive frame, trip unit and lugs assembled in one container. Pursuant to UL 489, a product ordered thus will have the markings "LINE" and "LOAD", and may not be "reverse fed" (with power flowing from the "OFF" end of the breaker toward the "ON" end).

Non-Interchangeable Trip Breakers

If you place an "X" after the frame size designator (e.g. JXD63B400), you will receive a frame and trip unit assembled, with the trip unit made non-removable. If you suffix an "L" to this catalog number (e.g. JXD63B400L), you will receive the breaker, non-removable trip unit and lugs assembled. Unless you anticipate a specific need to change the breaker's ampere rating in the future, this is the preferred ordering method, as the products are assembled to Siemens' specifications in our factories. These breakers are suitable for use reverse fed according to UL 489, since the trip unit is not removable.

The smaller frames (QJ, ED and below) do not have removable trip units, and consequently are shipped only as assembled products. To add lugs, see the ordering instructions on each product's catalog page.

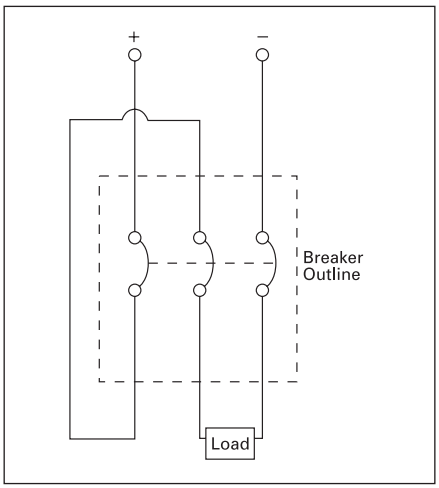

500V DC Wiring Configuration

Connecting Breakers for DC Application

Most Siemens thermal magnetic trip MCCBs are applicable on direct current (dc) systems. Generally, for 250 V dc systems a two pole breaker is used, with one pole on each leg of the supply circuit. For three pole breakers applied on 500 V undergrounded DC systems, it is important to connect the power supply "zig-zag" through the breaker as shown in the figure below. This assures that the Voltage between phases on the breaker terminals is uniformly distributed.

See below for an alternative connection diagram. For a list of Sentron breakers with the DC ratings, please refer to pages 7-12 to 7-16.

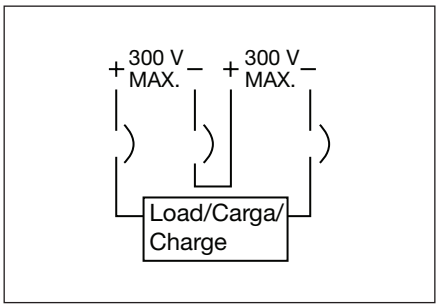

W-C-375C/GEN

Class	Interrupting Rating: Symmetrical Amperes①	Interrupting Rating: Volts AC 60HZ	Poles	Range of Current Trip③	Breaker Type (All Circuit Breakers Meet or Exceed the Indicated Class Level)
10a②	5,000	120/240	1 or 2	15–100	QP, BQ, QT, BL, BT④
10b	5,000	240	2 or 3	15–100	QP, BQ, BQD, CQD, BL
11a	7,500	120	1	15–100	QP, BQ, BQD, CQD, BL
11b	7,500	240	2 or 3	15–100	QP, BQ, BQD, CQD, BL
12a②	10,000	120/240	1 or 2	15–100	QP, BQ, QT, ED2, BL, BT④
12b	10,000	240	2 or 3	15–225	QP, BQ, QJ2, ED2, BQD, CQD, BL
12c	10,000	277	1	15–100	BQD, CQD, NGG, NGB, NEG, NEB
13a	14,000	277	1	15–100	ED4, BQD, CQD, NGG, NGB, NEG, NEB
13b	14,000	277/480	1, 2, or 3	15–100	ED4, BQD, CQD
14a	22,000	120/240	1 or 2	15–100	QPH, BQH, BLH, BTH④
14b	22,000	240	2 or 3	70–400	QJH2, QJ2-H, BQH, BQD, CQD, BLH
15a	65,000	120/240	1 or 2	15–100	HQP, HBQ, ED4, HED4, NGG, NGB
15b	65,000	240	2 or 3	15–225	ED6, ED4, FXD6, FD6, HED4, BQD, CQD, HQJ2H, NGG, NGB, NEG, NEB
16a	100,000	480	2 or 3	15–225	CFD6, CED6
16b	100,000	600	2 or 3	15–600	CED6, CFD6, CJD6, SCJD6, CLD6, SCLD6
17a	200,000	600	2 or 3	70–2000	—
18a	18,000 14,000 14,000	240 480 600	2 or 3	15–125	ED6, HED6, HHED6
19a	22,000 18,000 14,000	240 480 600	2 or 3	70–225	FXD6, FD6, CFD6, HFD6
20a	25,000 22,000 22,000	240 480 600	2 or 3	70–225	FXD6-A, FD6-A, CFD6, HFD6
21a	42,000 30,000 22,000	240 480 600	2 or 3	70–800	HFD6, CFD6, JXD6(A), JD6(A), SJD6-B, HJD(A), HJXD6(A), HHJD6, SHJD6-B, CJD6, SCJD6-B, LXD6(A), LD6(A), SLD6-B, HLD6(A), HLXD6(A), HHLD6, SLD6-B, SHLD6-B, CLD6, SCLD6-B, LMD6, LMXD6, HLMD6, HLMXD6, MD6, MXD6, SMD6-B, HMD6, HMXD6, SHMD6-B, CMD6, SCMD6-B
22a	65,000 25,000 18,000	240 480 600	2 or 3	15–125	CED6, ED6, HED6, HHED6, FXD6-A, FD6-A
23a	65,000 35,000 25,000	240 480 600	2 or 3	70–1200	HHED6, FXD6-A, FD6-A, HFD6, HHFD6, CFD6, JD6(A), JXD6(A), SJD6-B, HJD6(A), HJXD6(A), SHJD6-B, HHJD6, HHJXD6, CJD6, SCJD6-B, LXD6(A), LD6(A), SLD6-B, HLD6(A), HLXD6(A), SHLD6-B, HHLD6, HHLXD6, CLD6, SCLD6-B, LMD6, LMXD6, HLMD6, HLMXD6, MD6, MXD6, SMD6-B, HMD6, HMXD6, SHMD6-B, CMD6, SCMD6-B, ND6, NXD6, SND6-B, HND6, HNXD6, SHND6-B, CND6, SCND6-B
24a	65,000 50,000 42,000	240 480 600	2 or 3	1200–2000	PD6, PXD6, HPD6, HPXD6, CPD6 RD6, RXD6, HRD6, HRXD6, SPD6-B, SHPD6-B
25a	125,000 80,000 60,000	240 480 600	2 or 3	600–4000	HHLD6, CLD6, CMD6, CND6 SCLD6-B, SCMD6-B, SCND6-B, CPD6

Applicable Standards

UL489 — Molded Case Circuit Breakers and Circuit Breaker Enclosures.

UL486A — Wire Connectors and Solderless Lugs for use with copper wire

UL486B — Wire Connectors and Solderless Lugs for use with aluminum wire

UL943 — Ground Fault Interrupters (for personnel protectors)

UL1087 — Molded Case Switches

UL50 — Cabinets and Boxes

UL869 — Service Equipment

NEMA AB-1 — Molded Case Circuit Breakers and Molded Case Switches

CSA–C22.2 No. 5, C22.2 No. 14

Note:

(A) Molded case circuit breakers are designed and tested in accordance to applicable portions of UL489 and meet application requirements of the National Electric Code. Unless marked otherwise, circuit breakers are 80% duty rated.

(B) Molded case circuit breakers are to be connected with 60 or 75°C wire for circuit breakers having a rated ampacity of 100 amperes or less. Circuit breakers having a rated ampacity greater than 100 amperes shall only be cabled with 75°C cable unless otherwise indicated on the circuit breaker label. Exceptions to this rule are outlined in the article 110-14 C(1)(2) of the 2005 National Electric Code.

① Interrupting ratings are not limited to the values or groups of values listed. However, the values listed are minimum values for the class specified.

② Single-unit or duplex construction must be specified.

③ Use minimum frame size for ampere rating.

④ BT and BTH are only available in 15A and 20A with two 1-pole circuits in one inch of unit space. BT and BTH series breakers can be used in any Siemens panelboard in positions that accept BL or BLH series breakers. It is the installers responsibility to ensure that there is adequate neutral connections available in the panel before installing these breakers.

Type LXD6-A①④

Blue Label

Non-Interchangeable Trip (Assembled Circuit Breaker without Lugs)

Continuous Current Rating @ 40°C	2-Pole (3-Pole Width) 600V AC 250V DC Catalog Number	3-Pole 600V AC 500V DC Catalog Number
450	LXD62B450■	LXD63B450
500	LXD62B500■	LXD63B500
600	LXD62B600	LXD63B600

Type LD6-A④

Blue Label

Interchangeable Trip

Continuous Current Rating @ 40°C	Complete Breaker Unassembled w/Lugs Catalog Number	Frame Only Catalog Number	Trip Unit Only Catalog Number
2-Pole 600V AC, 250V DC (3-Pole Width)			
250	LD62B250■	LD62F600	JD62T250■
300	LD62B300■		JD62T300■
350	LD62B350■		JD62T350■
400	LD62B400		JD62T400
450	LD62B450■		LD62T450■
500	LD62B500■		LD62T500■
600	LD62B600		LD62T600
3-Pole 600V AC, 500V DC②			
250	LD63B250	LD63F600	JD63T250
300	LD63B300		JD63T300
350	LD63B350		JD63T350
400	LD63B400		JD63T400
450	LD63B450		LD63T450
500	LD63B500		LD63T500
600	LD63B600		LD63T600

Interrupting Ratings

Breaker Type	RMS Symmetrical Amperes (KA)											
	UL 489 AIR (File E10848)					IEC 947-2⑤					
	Volts AC (50/60Hz)			Volts DC		Volts AC (50/60Hz)					
	240	480	600	250	500③	220/240		380/415		500	
						(Icu)	(Ics)	(Icu)	(Ics)	(Icu)	(Ics)
LD6-A, LXD6-A	65	35	25	30 (2-P)	25 (3-P)	65	33	40	20	—	—
HLD6-A, HLXD6-A	100	65	35	30 (2-P)	35 (3-P)	100	50	65	33	—	—
HHLD6, HHLXD6	200	100	50	—	—	—	—	—	—	—	—
CLD6-A	200	150	100	—	50 (3-P)	—	—	—	—	—	—

Instantaneous Adjustment Trip Range

Breaker Ampere Rating	Nominal Instantaneous Values ±20% Tolerance Low	2	3	4	5	6	7	±20% Tolerance High
250-300	1250	1430	1610	1790	1960	2140	2320	2500
350-450	2000	2290	2570	2860	3140	3430	3710	4000
500-600	3000	3430	3800	4290	4710	5140	5570	6000

■ Built to order. Allow 2–3 weeks for delivery.

①Type LXD6A circuit breakers are UL Listed for reverse fed applications.
②When wired as shown on page 7-4, this circuit breaker is UL listed and rated for use on 500V DC ungrounded UPS systems only.
③See **Note: A**, page 7-154.
④HACR rated.
⑤Only applicable to interchangable trip unit types: LXD6, HLXD6.

Note: LD frame qualified to UL489 supplement SB "NAVAL". See page 7-157 for additional information.

Modifications page 7-157
Enclosures Section 6
Accessories pages 7-125 and 7-161 to 7-166

Ordering Information

Complete Breaker Unassembled with Lugs
Prices of LD6, HLD6, and HHLD6 breakers include frame, trip, and both line and load lugs (TA2J6500). When ordered by these catalog numbers, the customer will receive the frame, trip and lugs separately packaged. For applications requiring different lugs, order individual items as needed.

Complete Breaker Assembled without Lugs
Prices of LXD6, HLXD6, HHLXD6, and CLD6 include frame with non-interchangeable trip unit installed only. Order required lugs separately. For line and load lugs (TA2J6500) installed, add suffix "L" to catalog number (add 2 times list price of lugs for each pole).

100% Rated (3-pole only)
Types LXD6 and HLXD6 breakers are available with 100% ratings. To order add suffix "H" to catalog number, and 10% to list price. 100% rated LD breakers require the use of 90°C Cu cable sized at 75°C ampacity and lugs TC1J6600 or TC2J6500.

50°C Applications see page 7-157.

400Hz Applications see page 7-157.

Shipping Weights

Number of Poles	Number per Carton	Shipping Weight (lbs.)
LXD6, LD6, HLD6, HHLD6 Assembled Breaker (less terminals)		
2	1	17.5
3	1	19.5
LD6, HLD6, HHLD6 Frame Only		
2	1	14
3	1	15.5
LD6, HHLD6 Trip Unit Only		
2	1	3.5
3	1	4
CLD6 Complete Assembled Breaker (less terminals)		
3	1	31.5

Lugs For 75°C Wire③

Catalog Number	Cables per Lug	Wire Range
TA2J6500	1, 2 2	#3/0 500 kcmil Cu #4/0 500 kcmil Al
TC2J6500	2	#3/0-500 kcmil Cu
TA1L6750	1 1	500-750 kcmil Al 500-600 kcmil Cu
TC1J6600	1	#3/0-600 kcmil Cu
Compression Lug		
CCL600	1	500 kcmil Cu/Al

Breaker Type	Maximum Continuous Amperes	Nominal AC Adjustable Trip Range								ETI Motor Circuit Protector Catalog Number	Thermal Magnetic Catalog Number	
		Low	2	3	4	5	6	7	High	3-Pole	2-Pole	3-Pole
JXD2(A)	200	1250	1430	1610	1790	1960	2140	2320	2500	—	JXD22B200	JXD23B200
	225	1250	1430	1610	1790	1960	2140	2320	2500	—	JXD22B225	JXD23B225
	250	1250	1430	1610	1790	1960	2140	2320	2500	—	JXD22B250	JXD23B250
	300	1250	1430	1610	1790	1960	2140	2320	2500	—	JXD22B300	JXD23B300
	350	2000	2290	2570	2860	3140	3430	3710	4000	—	JXD22B350	JXD23B350
	400	2000	2290	2570	2860	3140	3430	3710	4000	—	JXD22B400	JXD23B400
JXD6(A)	200	1250	1430	1610	1790	1960	2140	2320	2500	—	JXD62B200	JXD63B200
	225	1250	1430	1610	1790	1960	2140	2320	2500	—	JXD62B225	JXD63B225
	250	1250	1430	1610	1790	1960	2140	2320	2500	—	JXD62B250	JXD63B250
	300	1250	1430	1610	1790	1960	2140	2320	2500	—	JXD62B300	JXD62B300
	350	2000	2290	2570	2860	3140	3430	3710	4000	—	JXD62B350	JXD23B350
	400	2000	2290	2570	2860	3140	3430	3710	4000	—	JXD62B400	JXD23B400
JD6(A)	200	1250	1430	1610	1790	1960	2140	2320	2500	—	JD62B200	JD63B200
	225	1250	1430	1610	1790	1960	2140	2320	2500	—	JD62B225	JD63B225
	250	1250	1430	1610	1790	1960	2140	2320	2500	—	JD62B250	JD63B250
	300	1250	1430	1610	1790	1960	2140	2320	2500	—	JD62B300	JD63B300
	350	2000	2290	2570	2860	3140	3430	3710	4000	—	JD62B350	JD63B350
	400	1250	1430	1610	1790	1960	2140	2320	2500	JXD63L400	—	—
	400	2000	2290	2570	2860	3140	3430	3710	4000	JXD63H400	JD62B400	JD63B400
HJD6(A)	200	1250	1430	1610	1790	1960	2140	2320	2500	—	HJD62B200	HJD63B200
	225	1250	1430	1610	1790	1960	2140	2320	2500	—	HJD62B225	HJD63B225
	250	1250	1430	1610	1790	1960	2140	2320	2500	—	HJD62B250	HJD63H250
	300	1250	1430	1610	1790	1960	2140	2320	2500	—	HJD62B300	HJD63B300
	350	2000	2290	2570	2860	3140	3430	3710	4000	—	HJD62B350	HJD63B350
	400	2000	2290	2570	2860	3140	3430	3710	4000	—	HJD62H400	HJD63B400
HHJD6	200	1250	1430	1610	1790	1960	2140	2320	2500	—	HHJD62B200	HHJD63B200
	225	1250	1430	1610	1790	1960	2140	2320	2500	—	HHJD62B225	HHJD63B225
	250	1250	1430	1610	1790	1960	2140	2320	2500	—	HHJD62B250	HHJD63B250
	300	1250	1430	1610	1790	1960	2140	2320	2500	—	HHJD62B300	HHJD63B300
	350	2000	2290	2570	2860	3140	3430	3710	4000	—	HHJD62B350	HHJD63B350
	400	2000	2290	2570	2860	3140	3430	3710	4000	—	HHJD62B400	HHJD63B400
CJD6	200	1250	1430	1610	1790	1960	2140	2320	2500	—	—	CJD63B200
	225	1250	1430	1610	1790	1960	2140	2320	2500	—	—	CJD63B225
	250	1250	1430	1610	1790	1960	2140	2320	2500	—	—	CJD63B250
	300	1250	1430	1610	1790	1960	2140	2320	2500	—	—	CJD63B300
	350	2000	2290	2570	2860	3140	3430	3710	4000	—	—	CJD63B350
	400	2000	2290	2570	2860	3140	3430	3710	4000	CJD63H400	—	CJD63B400
	400	1250	1450	1610	1790	1960	2140	2320	2500	CJD63L400	—	—
LXD6(A)	450	2000	2290	2570	2860	3140	3430	3710	4000	—	LXD62B450	LXD63B450
	500	3000	3430	3860	4290	4710	5140	5570	6000	—	LXD62B500	LXD63B500
	600	3000	3430	3860	4290	4710	5140	5570	6000	—	LXD62B600	LXD63B600
LD6(A)	250	1250	1430	1610	1790	1960	2140	2320	2500	—	LD62B250	LD63B250
	300	1250	1430	1610	1790	1960	2140	2320	2500	—	LD62B300	LD63B300
	350	2000	2290	2570	2860	3140	3430	3710	4000	—	LD62B350	LD63B350
	400	2000	2290	2570	2860	3140	3430	3710	4000	—	LD62B400	LD63B400
	450	2000	2290	2570	2860	3140	3430	3710	4000	—	LD62B450	LD63B450
	500	3000	3430	3800	4290	4710	5140	5570	6000	—	LD62B500	LD63B500
	600	2000	2290	2570	2860	3140	3430	3710	4000	LXD63L600	—	—
	600	3000	3430	3800	4290	4710	5140	5570	6000	LXD63H600	LD62B600	LD63B600
HLD6(A)	250	1250	1430	1610	1790	1960	2140	2320	2500	—	HLD62B250	HLD63B250
	300	1250	1430	1610	1790	1960	2140	2320	2500	—	HLD62B300	HLD63B300
	350	2000	2290	2570	2860	3140	3430	3710	4000	—	HLD62B350	HLD63B350
	400	2000	2290	2570	2860	3140	3430	3710	4000	—	HLD62B400	HLD63B400
	450	2000	2290	2570	2860	3140	3430	3710	4000	—	HLD62B450	HLD63B450
	500	3000	3430	3860	4290	4710	5140	5570	6000	—	HLD62B500	HLD63B500
	600	3000	3430	3860	4290	4710	5140	5570	6000	—	HLD62B600	HLD63B600
HHLD6	250	1250	1430	1610	1790	1960	2140	2320	2500	—	HHLD62B250	HHLD63B250
	300	1250	1430	1610	1790	1960	2140	2320	2500	—	HHLD62B300	HHLD63B300
	350	2000	2290	2570	2860	3140	3430	3710	4000	—	HHLD62B350	HHLD63B350
	400	2000	2290	2570	2860	3140	3430	3710	4000	—	HHLD62B400	HHLD63B400
	450	2000	2290	2570	2860	3140	3430	3710	4000	—	HHLD62B450	HHLD63B450
	500	3000	3430	3860	4290	4710	5140	5570	6000	—	HHLD62B500	HHLD63B500
	600	3000	3430	3860	4290	4710	5140	5570	6000	—	HHLD62B600	HHLD63B600
CLD6	250	1250	1430	1610	1790	1960	2140	2320	2500	—	—	CJD63B250
	300	1250	1430	1610	1790	1960	2140	2320	2500	—	—	CJD63B300
	350	2000	2290	2570	2860	3140	3430	3710	4000	—	—	CJD63B350
	400	2000	2290	2570	2860	3140	3430	3710	4000	—	—	CLD63B400
	450	2000	2290	2570	2860	3140	3430	3710	4000	—	—	CLD63B450
	500	3000	3430	3860	4290	4710	5140	5570	6000	—	—	CLD63B500
	600	2000	2290	2570	2860	3140	3430	3710	4000	CLD63L600	—	—
	600	3000	3430	3860	4290	4710	5140	5570	6000	CLD63H600	—	CLD63B600
LMXD6	500	3000	3430	3860	4290	4710	5140	5570	6000	—	—	LMXD63B500
	600	3000	3430	3860	4290	4710	5140	5570	6000	—	LMXD62B600	LMXD63B600
	700	3200	3500	3700	4200	4700	6400	7300	8000	—	LMXD62B700	LMXD63B700
	800	2800	3100	3400	3700	4000	4800	5500	6000	LMXD63L800	—	—
	800	3200	3500	3700	4200	4700	6400	7300	8000	LMXD63A800	LMXD62B800	LMXD63B800
LMD6	500	3000	3430	3860	4290	4710	5140	5570	6000	—	LMD62B500	LMD63B500
	600	3000	3430	3860	4290	4710	5140	5570	6000	—	LMD62B600	LMD63B600
	700	3200	3500	3700	4200	4700	6400	7300	8000	—	LMD62B700	LMD63B700
	800	3200	3500	3700	4200	4700	6400	7300	8000	—	LMD62B800	LMD63B800

Sentron Series	Note	Superseded	Note	Superseded
JD62B200-JD62B400	①	JLB200-JL62B400	②	JL2B070-JL2B400
JD63B200-JD63B400	①	JL63B200-JL63B400	②	JL3B0L0-JL3B400
JXD22B200-JXD22B400	①	JD22B200-JD22B400	②	JD2B250-JD2B400
JXD22S400A	①	JD22S400	②	JD2S400
JXD23B200-JXD23B400	①	JD23B200-JD23B400	②	JD3B250-JD3B400
JXD23S400A	①	JD23S400	②	JD3S400
JXD62B200-JXD62B400	①	JJ62B200-JJ62B400	②	JJ2B250-JJ2B400
JXD62H400, JXD62L400	①	JL62L400, JL62H400	②	JL2L400-JL2H400
JXD62S400A	①	JJ62S400A		
JXD63B200-JXD63B400	①	JJ63B200-JJ63B400	②	JJ3B200-JJ3B400
JXD63H400, JXD63L400	①	JL63A400, JL63H400, JL63L400	②	JL3H400, JL3L400, JL3A225
JXD63S400A	①	JJ63S400A		
LD62B250-LD62B500	①	LL63B250-LL62B600	②	LL2B450-LL2B600
LD62B250-LD63B600	①	LL63B250-LL63B600	②	LL3B450-LL3B600
LXD62B450-LXD62B600	①	LJ62B450-LJ62B600		
LXD62J600, LXD62L600	②	LL2H600, LL2U600, LL2X600		
LXD62S600A	①	LJ62S600		
LXD63B450-LXD63B600	①	LJ63B450-LJ63B600		
LXD64H600, LXD63L600	①	LL63H600, LL63L600	②	LL3A450, LL3H600
LXD63S600A	①	LJ63S600A	②	LL3S600
MD62B500-MD62B800	②	KM2B500-KM2B800		
MD63B500-MD63B800	②	KM3B500-KM3B800		
MXD62A800, MXD62H800, MXD62L800	②	KM2A800, KM2H800, KM2L800		
MXD62S800A	②	KM2S800		
MXD63A800, MXD63H800, MXD63L800	②	KM3A600, KM3H800, KM3L800		
MXD63S800A	②	KM3S800		
ND63B100-ND63B900	②	KP3B100-KP3B900		
NXD63S120A	②	KP3S120		
PD63B120-PD63B160	②	HP3B120-HP3B160		
PXD63S160A	②	HP3S160		
RD63B160-RD63B200	②	HR3B160-HR3B200		
QR22B100 – QR22B225		QJ22B060-QJ22B225		
QR22B100H – QR22B225H		QJ22B060H-QJ22B225H		
HQR23S250HA		QJ22S225		
QJ23B100 – QR23B225		QJ23B060-QJ23B225		
QR23B100H – QR23B225H		QJ23B060H-QJ23B225H		
QRH22B100 – QRH22B225		QJH22B060-QJH22B225		
QRH23B100 – QRH23B225		QJH23B060-QJH23B225		
HQR23S250HA		QJH23S225	①	
QJH22B060-QJH22B225	①	QJ2H125-QJ2B225		
QJH23B060-QJH23B225	①	QJ3H125-QJ3H225		
QJH23S225	①	QJ3S225		
RD63B160-RD63B200	②	HR3B160-HR3B200		
RXD63S200A	②	HR3S200		
SCJD6B200LI-SCJD6B400LI	①	SCJD69200-SCJD69400		
SCJD6B200LIG-SCJD6B400LIG	①	SCJD69200G-SCJD69400G		
SCJD6B200LSIG-SCJD6B400LSIG	①	SCJD69200NGT-SCJD69400NGT		
SCJD6B200LSI-SCJD6B400LSI	①	SCJD69200NT-SCJD69400NT		
SCLD6B300LI-SCLD6B600LI	①	SCLD69300-SCLD69600		
SCLD6B300LIG-SCLD6B600LIG	①	SCLD69300G-SCLD69600G		
SCLD6B300LSIG-SCLD6B600LSIG	①	SCLD69300NGT-SCLD69600NGT		
SCLD6B300LSI-SCLD6B600LSI	①	SCLD69300NT-SCLD69600NT		
SCMD6B600LI-SCMD6B800LI	①	SCMD69600A-SCMD69800A		
SCMD6B600LIG-SCMD6B800LIG	①	SCMD69600AG-SCMD69800AG		
SCMD6B600LSIG-SCMD6B800LSIG	①	SCMD69600ANGT-SCMD69800ANGT		
SCMD6B600LSI-SCMD6B800LSI	①	SCMD69600ANT-SCMD69800ANT		

①Mechanically and electrically interchangeable.
②Electrically interchangeable only, refer to sales office for further details.

③Electrically interchangeable only if the system interrupting capacity is less than or equal to:
200 kA at 240V AC
200 kA at 480V AC
100 kA at 600V AC

④Electrically interchangeable only if the system interrupting capacity is less than or equal to:
200 kA at 240V AC
150 kA at 480V AC
100 kA at 600V AC

⑤Refer to local sales office for replacement information.