SIEMENS

SITOP power supply

Power supply system PSU8600

Manual

SITOP PSU8600 24 V DC/20 A
6EP3436-8SB00-2AY0
SITOP PSU8600 24 V DC/40 A
6EP3437-8SB00-2AY0
SITOP CNX8600 4 x 5 A
6EP4436-8XB00-0CY0
SITOP CNX8600 4 x 10 A
6EP4437-8XB00-0CY0
SITOP BUF8600 100 ms/40 A
6EP4297-8HB00-0XY0
SITOP BUF8600 300 ms/40 A
6EP4297-8HB10-0XY0
SITOP BUF8600 4 s/40 A
6EP4293-8HB00-0XY0
SITOP BUF8600 10 s/40 A
6EP4295-8HB00-0XY0

02.2016
A5E36758446-1-76

Overview

Safety instructions 1

Description, device design, dimension drawing 2

Operator control at the device 3

Installation and maintenance 4

Mounting position, mounting clearances 5

Installation 6

Engineering and remote access 7

Troubleshooting 8

Technical data 9

Safety, approvals, EMC 10

Environmental conditions 11

Applications 12

Environment 13

Service & support 14

Legal information

Warning notice system

This manual contains notices you have to observe in order to ensure your personal safety, as well as to prevent damage to property. The notices referring to your personal safety are highlighted in the manual by a safety alert symbol, notices referring only to property damage have no safety alert symbol. These notices shown below are graded according to the degree of danger.

⚠ DANGER

indicates that death or severe personal injury **will** result if proper precautions are not taken.

⚠ WARNING

indicates that death or severe personal injury **may** result if proper precautions are not taken.

⚠ CAUTION

indicates that minor personal injury can result if proper precautions are not taken.

NOTICE

indicates that property damage can result if proper precautions are not taken.

If more than one degree of danger is present, the warning notice representing the highest degree of danger will be used. A notice warning of injury to persons with a safety alert symbol may also include a warning relating to property damage.

Qualified Personnel

The product/system described in this documentation may be operated only by **personnel qualified** for the specific task in accordance with the relevant documentation, in particular its warning notices and safety instructions. Qualified personnel are those who, based on their training and experience, are capable of identifying risks and avoiding potential hazards when working with these products/systems.

Proper use of Siemens products

Note the following:

⚠ WARNING

Siemens products may only be used for the applications described in the catalog and in the relevant technical documentation. If products and components from other manufacturers are used, these must be recommended or approved by Siemens. Proper transport, storage, installation, assembly, commissioning, operation and maintenance are required to ensure that the products operate safely and without any problems. The permissible ambient conditions must be complied with. The information in the relevant documentation must be observed.

Trademarks

All names identified by ® are registered trademarks of Siemens AG. The remaining trademarks in this publication may be trademarks whose use by third parties for their own purposes could violate the rights of the owner.

Disclaimer of Liability

We have reviewed the contents of this publication to ensure consistency with the hardware and software described. Since variance cannot be precluded entirely, we cannot guarantee full consistency. However, the information in this publication is reviewed regularly and any necessary corrections are included in subsequent editions.

Siemens AG
Division Process Industries and Drives
Postfach 48 48
90026 NÜRNBERG
GERMANY

A5E36758446-1-76
℗ 03/2016 Subject to change

Copyright © Siemens AG 2016.
All rights reserved

Overview



The SITOP PSU8600 power supply system is the high-performance, regulated technology power supply system for automated plants and machines.

The key benefits of the product include:

- Wide-range input, which allows them to be connected to almost all 3-phase line supplies around the world
- Number of outputs can be expanded using up to four expansion modules SITOP CNX8600
- The voltage of each output can be adjusted in the range 5 - 28 V
- Electronic overload shutdown for each output, the response threshold can be adjusted
- Integrated Ethernet/PROFINET interfaces (2 port switch)
- Diagnostics data and alarm messages available via Ethernet/PROFINET
- Outputs can be switched – controlled from a program – and parameterized via Ethernet/PROFINET
- Completely integrated in TIA: User-friendly engineering in the TIA Portal, S7 function blocks for integration in user programs and WinCC faceplates
- Remote monitoring via the integrated web server
- Brief overload capability of 150% for 5 s/min (extra power)
- Low width and high efficiency

- Rail mounting and connection using plug-in terminals
- To increase the plant and system availability, can be expanded using SITOP BUF8600 buffer modules and SITOP DC-UPS modules

Ordering data

Basic devices and supplementary modules:

SITOP PSU8600 power supply systems	
Type	**Article number**
Basic device SITOP PSU8600	
3AC 400 - 500 V input	
24 V/20 A output	6EP3436-8SB00-2AY0
24 V /40 A output	6EP3437-8SB00-2AY0
Expansion modules SITOP CNX8600	
4 × 5 A expansion module	6EP4436-8XB00-0CY0
4 × 10 A expansion module	6EP4437-8XB00-0CY0
Buffer modules SITOP BUF8600	
100 ms/40 A buffer module	6EP4297-8HB00-0XY0
300 ms/40 A buffer module	6EP4297-8HB10-0XY0
4 s/40 A buffer module	6EP4293-8HB00-0XY0
10 s/40 A buffer module	6EP4295-8HB00-0XY0

Validity

This manual provides information on the following products:

- Basic device SITOP PSU8600 24 V DC/20 A PN
  Article number: 6EP3436-8SB00-2CY0
  Product state: 1
  Firmware version: V1.1
  First release
- Basic device SITOP PSU8600 24 V DC/40 A PN
  Article number: 6EP3437-8SB00-2CY0
  Product state: 1
  Firmware version: V1.1
  First release
- Expansion module SITOP CNX8600 4 × 5 A
  Article number: 6EP4436-8XB00-0CY0
  Product state: 2
  Firmware version: V1.1
  Functional expansion with respect to the previous version:
  - Output voltage adjustment range 5 - 28 V

- Expansion module SITOP CNX8600 4 × 10 A
  Article number: 6EP4437-8XB00-0CY0
  Product state: 2
  Firmware version: V1.1
  Functional expansion with respect to the previous version:
  - Output voltage adjustment range 5 - 28 V
- Buffer module SITOP BUF8600 100 ms/40 A
  Article number: 6EP4297-8HB00-0XY0
  Product state: 1
  Firmware version: V1.1
  Functional expansion with respect to the previous version:
  - Buffer operation can be activated/deactivated via a remote command
- Buffer module SITOP BUF8600 300 ms/40 A
  Article number: 6EP4297-8HB10-0XY0
  Product state: 1
  Firmware version: V1.1
  Functional expansion with respect to the previous version:
  - Buffer operation can be activated/deactivated via a remote command
- Buffer module SITOP BUF8600 4 s/40 A
  Article number: 6EP4293-8HB00-0XY0
  Product state: 1
  Firmware version: V1.1
  First release
- Buffer module SITOP BUF8600 10 s/40 A
  Article number: 6EP4295-8HB00-0XY0
  Product state: 1
  Firmware version: V1.1
  First release

Table of contents

Overview **3**

1 Safety instructions **11**

2 Description, device design, dimension drawing **13**

2.1 Description of the basic devices 13

2.2 Description of the expansion modules 15

2.3 Description of the buffer modules 16

2.4 Connections and terminal designations 21
2.4.1 Basic devices 21
2.4.2 Expansion modules 23
2.4.3 Buffer modules 24

2.5 Operator controls 25
2.5.1 Basic devices 25
2.5.2 Expansion modules 28

2.6 Displays 30
2.6.1 Basic devices 30
2.6.2 Expansion modules 34
2.6.3 Buffer modules 36

2.7 Signaling contact/control contact 38
2.7.1 Basic devices 38
2.7.2 Buffer modules 39

2.8 Block diagrams 41

2.9 Dimensions and weights 43

3 Operator control at the device **51**

3.1 Setting the output voltage and response threshold value of the output current 53
3.1.1 Setting the output voltage 53
3.1.2 Setting the response threshold value of the output current 54

3.2 Switching an output on and off 55

3.3 Overload shutdown and carrying out a reset 56

3.4 MANUAL and REMOTE operating modes 59

3.5 Prioritization when the power fails 62

3.6 ELECTRONIC SHUTDOWN and CONSTANT CURRENT operating modes 64

3.7 Setting the on delay 66

3.8 Setting the output characteristic 69

3.9 Activating the web server on the module 71

3.10 Monitoring functions ... 73
3.10.1 Overtemperature monitoring functions ... 73
3.10.2 Phase dissymmetry monitoring ... 75
3.10.3 System overload monitoring ... 77
3.11 Activating and deactivating buffer operation ... 79
4 Installation and maintenance ... 81
4.1 Connecting plug ... 81
4.2 Rail mounting ... 82
4.3 Permissible hardware configurations ... 84
4.4 Removal ... 85
4.5 Replacing individual components ... 87
4.6 System response for a modified hardware configuration ... 91
4.6.1 Response after changing an individual component ... 92
4.6.2 Response after adding an individual component ... 94
4.6.3 Response after removing an individual component ... 94
5 Mounting position, mounting clearances ... 97
5.1 Standard mounting position ... 97
5.2 Other mounting positions ... 99
5.2.1 Basic device SITOP PSU8600 20 A ... 99
5.2.2 Basic device SITOP PSU8600 20 A and supplementary modules ... 101
5.2.3 Basic device SITOP PSU8600 40 A ... 103
5.2.4 Basic device SITOP PSU8600 40 A and supplementary modules: ... 105
6 Installation ... 107
6.1 Line-side connection ... 107
6.2 Connection on the output side ... 109
6.3 Connecting the signaling contact/reset terminal ... 110
6.4 Establishing a PROFINET connection ... 112
6.5 Establishing an additional ground connection ... 113
6.6 Connecting the control contact and signaling contacts of the buffer module ... 114
7 Engineering and remote access ... 115
7.1 General information ... 115
7.2 Overview of application examples ... 115
7.3 SIMATIC STEP 7 in the TIA Portal ... 116
7.3.1 Installing the Hardware Support Package (HSP) ... 116
7.3.2 Geräte-Stammdaten-Datei (GSD) installieren ... 117
7.3.3 Inserting SITOP PSU8600 into a project ... 118
7.3.4 Assigning a SITOP PSU8600 to a controller ... 120
7.3.5 Assigning supplementary modules to the SITOP PSU8600 basic device ... 121

7.3.6 Parameter assignment ... 125
7.3.6.1 Parameters of the basic units and the supplementary modules ... 125
7.3.6.2 Parameterizing the basic unit ... 128
7.3.6.3 Output 1, output 1 ... 134
7.3.7 Loading the configuration (commissioning) ... 135
7.3.8 Diagnostics ... 139
7.3.9 Firmware update ... 140
7.3.10 Reset to factory settings ... 141

7.4 SIMATIC STEP 7 ... 142
7.4.1 Installing the device data file (GSD) ... 142
7.4.2 Inserting SITOP PSU8600 into a project ... 143
7.4.3 Assigning supplementary modules to the basic unit ... 146
7.4.4 Parameter assignment ... 149
7.4.4.1 Parameterizing SITOP PSU8600 ... 149
7.4.4.2 Parameters of the basic unit and supplementary modules ... 150
7.4.4.3 Parameterizing the basic unit ... 152
7.4.4.4 Parameterizing output 1 ... 157
7.4.5 Loading the configuration (commissioning) ... 158
7.4.6 Diagnostics ... 160
7.4.7 Firmware update ... 160
7.4.8 Reset to factory settings ... 161

7.5 Web server ... 162
7.5.1 Accessing the web server ... 162
7.5.2 The web server user interface ... 164
7.5.3 Functions of the web server ... 165
7.5.4 Loading the configuration (commissioning) ... 166
7.5.5 Diagnostics ... 167
7.5.5.1 Alarms ... 167
7.5.5.2 Operating data ... 169
7.5.5.3 Online functions ... 170
7.5.6 HW configuration ... 174
7.5.6.1 Configuring the PROFINET interface ... 175
7.5.6.2 Web server settings / user administration ... 177
7.5.6.3 Configuring SITOP PSU8600 ... 179
7.5.6.4 Loading and saving configurations ... 187

7.6 Cyclic and acyclic data ... 188
7.6.1 Input and output data ... 189
7.6.1.1 Input data ... 189
7.6.1.2 Output data ... 191
7.6.1.3 Operating states SITOP PSU8600 ... 193
7.6.1.4 Operating states SITOP CNX8600 ... 194
7.6.1.5 Operating states SITOP BUF8600 ... 195
7.6.2 Reading and writing data sets ... 196
7.6.2.1 Overview of reading and writing data sets ... 196
7.6.2.2 Data sets SITOP PSU8600 ... 198
7.6.2.3 Data sets SITOP CNX8600 ... 207
7.6.2.4 Data sets SITOP BUF8600 ... 211

8 Troubleshooting 215
8.1 Troubleshooting based on the LED signal sequence 215
8.2 PROFINET alarm list 215
9 Technical data 219
9.1 Input data 219
9.2 Output data 221
9.3 Efficiency 227
9.4 Closed-loop control 228
9.5 Protection and monitoring 229
9.6 MTBF 230
9.7 Mechanical system 230
9.8 Accessories 232
9.9 Dimension drawings 233
10 Safety, approvals, EMC 235
10.1 Safety 235
10.2 Test voltages 236
10.3 Approvals 237
10.4 EMC 238
11 Environmental conditions 239
12 Applications 241
12.1 Protection against brief power failures 241
12.2 Protecting against longer power failures 242
12.3 Parallel connection to increase power rating 243
12.4 Parallel connection for redundancy 244
13 Environment 247
14 Service & support 249

Safety instructions

1

⚠ WARNING

Correct handling of the devices

When operating electrical devices, it is inevitable that certain components will carry dangerous voltages.

Therefore, failure to handle the units properly can result in death or serious physical injury as well as extensive property damage.

Only appropriately qualified personnel may work on or in the vicinity of this equipment.

Perfect, safe, and reliable operation of this equipment is dependent on proper transportation, storage, installation and mounting.

Before installation or maintenance work can begin, the system's main switch must be switched off and measures taken to prevent it being switched on again.

If this instruction is not observed, touching live parts can result in death or serious injury.

Note

Siemens provides products and solutions with industrial security functions that support the secure operation of plants, solutions, machines, equipment and/or networks. They are important components in a holistic industrial security concept. With this in mind, Siemens products and solutions undergo continuous development. Siemens recommends strongly that you regularly check for product updates.

For the secure operation of Siemens products and solutions, it is necessary to take suitable preventive action (e.g. cell protection concept) and integrate each component into a holistic, state-of-the-art industrial security concept. Any third-party products that may be in use must also be taken into account. You will find more information about industrial security at (http://www.siemens.com/industrialsecurity).

To stay informed about product updates as they occur, sign up for a product-specific newsletter. You will find additional information on this at (https://support.industry.siemens.com).

Description, device design, dimension drawing 2

2.1 Description of the basic devices

The basic devices SITOP PSU8600 are primary-clocked power supplies for connection to 3-phase AC line supplies. An electronically regulated DC voltage that can be set via a potentiometer is available at the output of the devices. The device output is isolated, no-load and short-circuit proof and has an electronic overload trip, which can be set using an additional potentiometer. The device output can be switched-on and switched-off using a button.

LEDs signal the operating state of the device as well as the output. The electronic overload shutdown is reset using the reset input and the button of the output. Additional, special functions of the devices can be activated using selector switches (DIP).

The device output can be controlled, operating and diagnostics data transferred and externally visualized or processed via the two integrated industrial Ethernet/PROFINET ports. An integrated web server allows authorized users to read and write data remotely via a web browser.

The functionality of the basic devices can be expanded using supplementary modules. There are expansion modules to increase the number of outputs, and buffer modules to extend the internal device power failure buffer time.

Table 2- 1 Versions of the basic units

Designation	Number of outputs	Maximum current at the output	Article No.
Power supply 24 V DC/20 A	1	20 A	6EP3436-8SB00-2AY0
Power supply 24 V DC/40 A	1	40 A	6EP3437-8SB00-2AY0

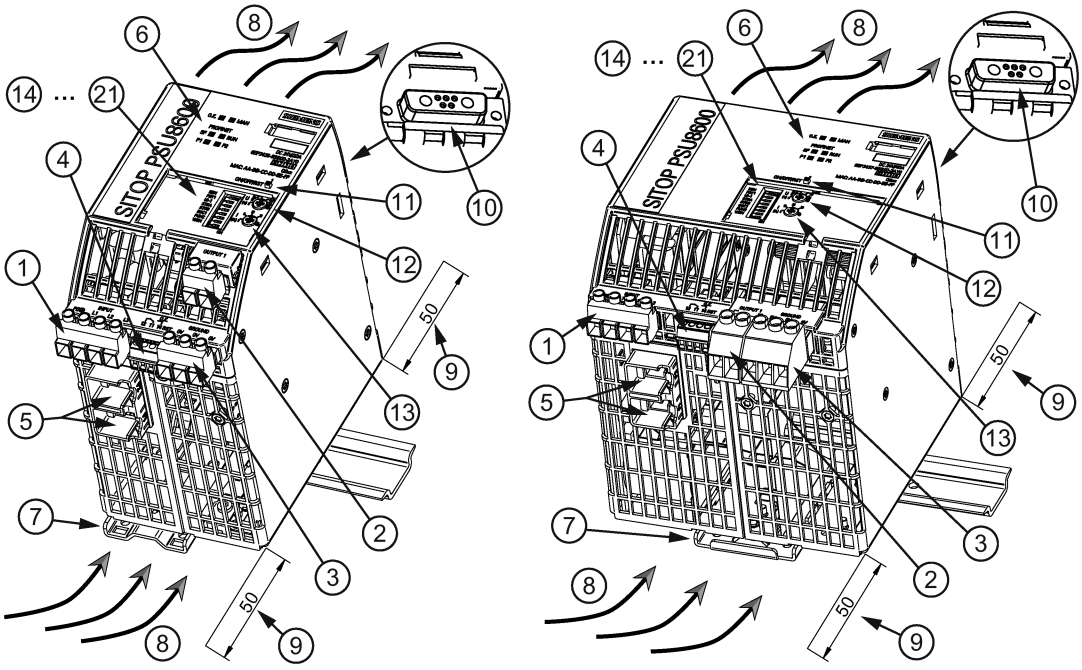

①	AC input
②	DC output
③	0 Volt terminal
④	Signaling contact, remote reset
⑤	Ethernet/PROFINET interface
⑥	LED displays (OK, MAN, SF, RUN, P1/P2)
⑦	DIN rail slider
⑧	Convection
⑨	Clearance above/below
⑩	Socket at the upper side of the device for the plug connection to optional expansion modules
⑪	Buttons of the outputs with LED display "ON/OFF/RST"
⑫	Voltage potentiometer
⑬	Current potentiometer
from ⑭	Selector switch, special functions

2.2 Description of the expansion modules

Using a SITOP CNX8600 expansion module, the number of system outputs can be increased, however, not the maximum output power of the basic device. The expansion modules have, just like the basic device, a potentiometer for setting, and buttons to switch-on and switch-off the relevant output. LEDs signal the operating states of the expansion module as well as the individual outputs. A maximum of four expansion modules can be used for each basic device. The connection to the basic device or to the adjacent module is established using an integrated connecting plug.

Expansion module versions

Designation	Number of outputs	Max. current per output	Article No.
4 × 5 A expansion module	4	5 A	6EP4436-8XB00-0CY0
4 × 10 A expansion module	4	10 A	6EP4437-8XB00-0CY0

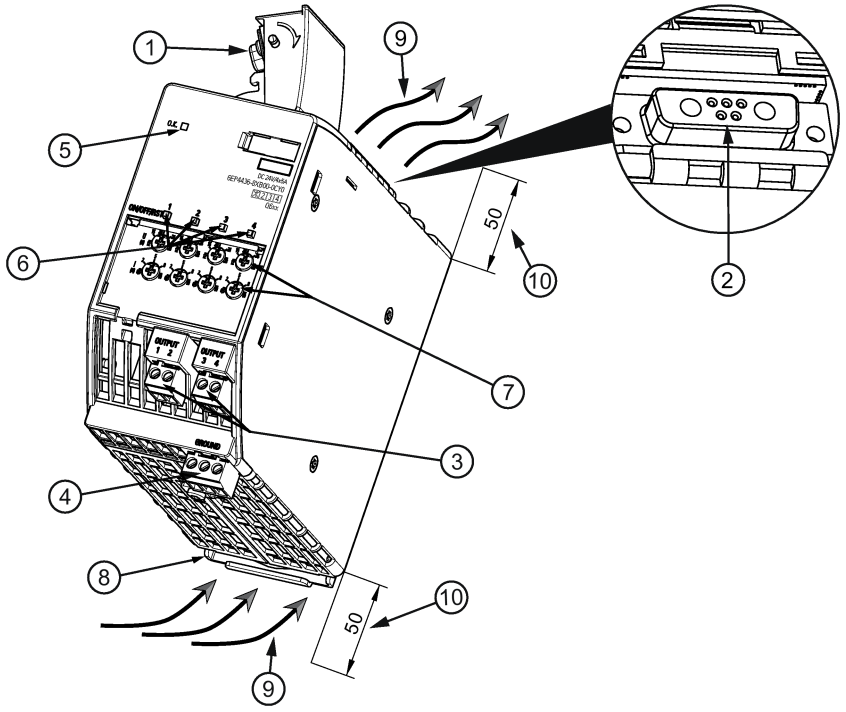

① Connecting plug at the upper side of the device for the plug connection to the basic device or additional modules
② Socket at the upper side of the device for the plug connection to additional modules
③ DC outputs
④ Ground connection
⑤ "OK" LED display
⑥ Buttons of the outputs with LEDs "ON/OFF/RST"
⑦ Voltage, current potentiometer
⑧ DIN rail slider
⑨ Convection
⑩ Clearance above/below

2.3 Description of the buffer modules

A buffer module SITOP BUF8600 allows the buffer time to be extended when the power fails. An LED is used to signal the operating state of the buffer module. A maximum of two buffer modules can be used for each basic unit. The connection to the basic unit or to the adjacent module is established using an integrated connecting plug.

For brief power failures, the outputs of the power supply system are supplied without interruption using the energy stored in the buffer module.

Buffer module versions

There are two BUF8600 buffer module versions available. Buffer modules with electrolytic capacitors and buffer modules with double-layer capacitors.

Table 2- 2 BUF8600 buffer modules with electrolytic capacitors

Designation	Buffer time	Typical charge time for a rated input voltage of 400 V	Article No.
Buffer module 100 ms/40 A	100 ms at 40 A	20 s	6EP4297-8HB00-0XY0
Buffer module 300 ms/40 A	300 ms at 40 A	60 s	6EP4297-8HB10-0XY0

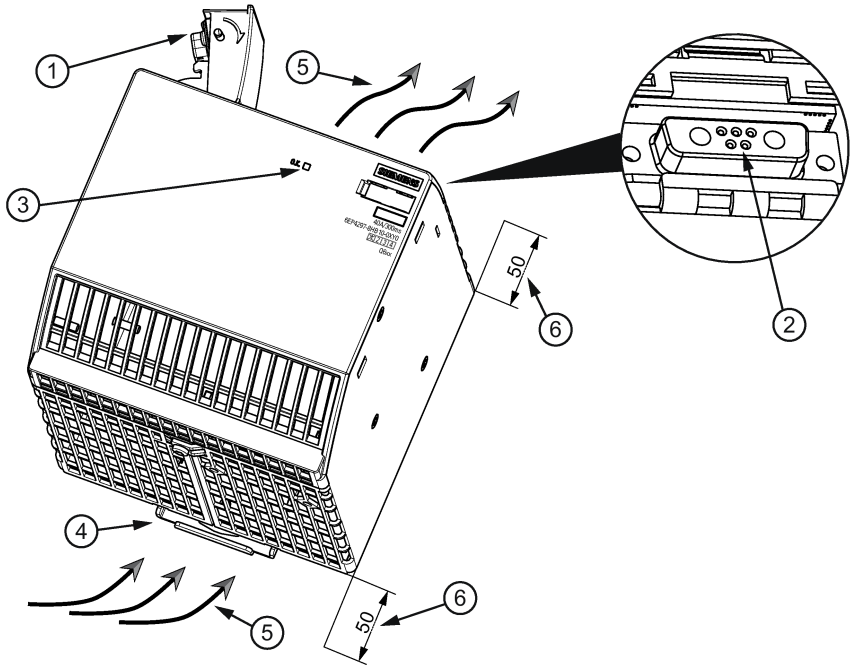

① Connecting plug at the upper side of the device for the plug connection to the basic unit or additional modules.
② Socket at the upper side of the device for the plug connection to additional modules
③ "O.K." LED
④ DIN rail slider
⑤ Convection
⑥ Clearance above/below

When the buffer module with electrolytic capacitors is completely charged (LED "O.K." lights green) power failures of 100 ms or 300 ms can be buffered with a load current of 40 A. The buffer time is correspondingly increased for lower load currents.

Table 2- 3 BUF8600 buffer modules with double-layer capacitors

Designation	Buffer time	Charge time for a rated input voltage of 400 V	Article number
4 s/40 A buffer module	4 s at 40 A	typ. 5 min; max. 8 min (when completely discharged)	6EP4293-8HB00-0XY0
10 s/40 A buffer module	10 s at 40 A	typ. 10 min; max. 18 min (when completely discharged)	6EP4295-8HB00-0XY0

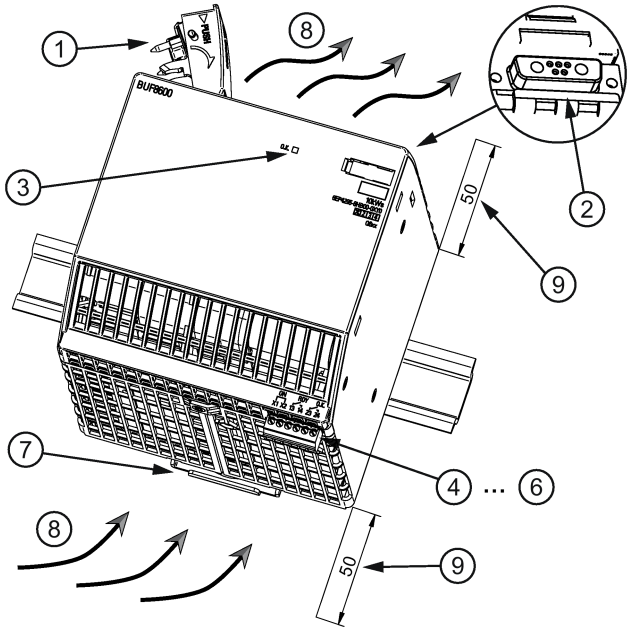

① Connecting plug at the upper side of the device for the plug connection to the basic device or additional modules
② Socket at the upper side of the device for the plug connection to additional modules
③ "O.K." LED
④… Remote ON/OFF and signaling contacts
⑥
⑦ DIN rail slider
⑧ Convection
⑨ Clearance above/below

When the buffer module with double-layer capacitors is completely charged (LED "OK" lights green) power failures of 4 s or 10 s can be buffered with a load current of 40 A. The buffer time is correspondingly increased for lower load currents.

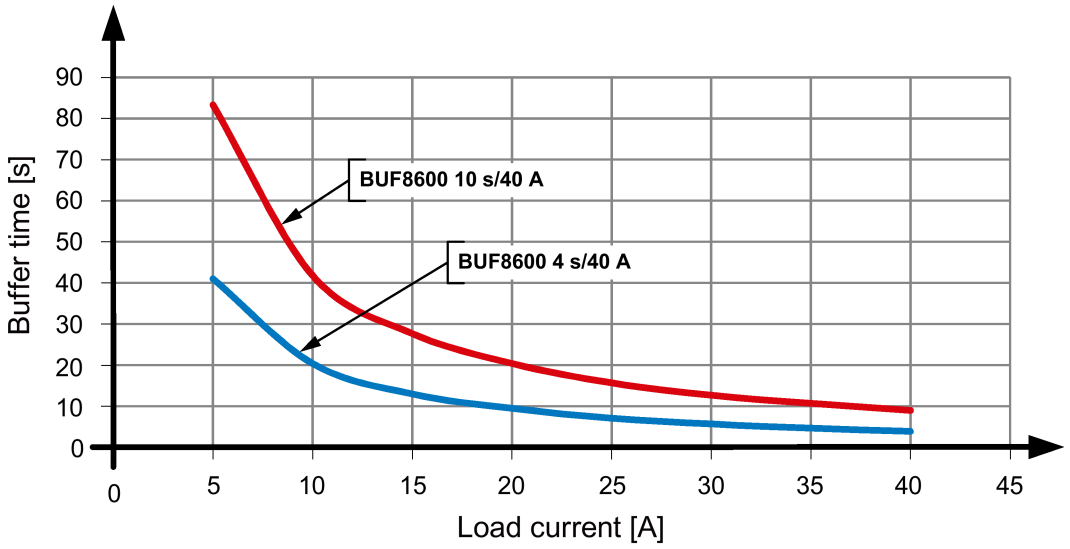

Image 2-1 Typical buffer time as a function of the load current

Note

Restriction when using a SITOP BUF8600 4 s/40 A buffer module in a 40 A- power supply system

When using a SITOP BUF8600 4 s/40 A buffer module in a 40 A power supply system, the 150 % overload capability for 5 s/min (Extra-Power) and 300% for 25 ms (Power Boost) are **not** supported.

The buffer mode is immediately exited if, during the buffer mode, a system overload > 100 % occurs.

When using a buffer module with double-layer capacitors, the following additional functions are available:

Brief interruption of the voltage at output 1

If a PC is operated on the PSU8600 power supply system, when the power fails, then this must be run down in plenty of time before the buffer time expires in order to avoid data being lost. If the supply voltage returns after the shutdown has already started, the buffer mode is exited and the power supply resumes normal operation. However, the PC is run down completely. If the PC does not have an ON/OFF-switch, then it can only be rebooted by switching off the power supply and switching it on again.

When using a buffer module with double-layer capacitors, the "Enable short-time interruption at output 1" function is used to activate the brief interruption of the voltage at output 1 when the supply voltage returns. However, the selection and parameterization is only possible when appropriately configured (web server, STEP 7).

You can find additional information in Chapter Engineering and remote access (Page 115)

"Longlife" mode

In order to increase the service life of the buffer modules with a double-layer capacitors, this can be operated in the "Longlife" mode with reduced buffer capacity. When the buffer module is completely charged (LED " lights green) power failures of 3 s up to a maximum of 8 s can be buffered with a load current of 40 A. However, the "Longlife" mode is only possible when appropriately configured (web server, STEP 7).

You can find additional information in Chapter Engineering and remote access (Page 115)

2.4 Connections and terminal designations

2.4.1 Basic devices

The line input terminals ① are used to establish the connection to the supply voltage. The output terminals ② and the 0 V terminal ③ are the load connections. A ground connection to other supplementary modules can be established using the 0 Volt terminal ③.
The operating state of the device can be interrogated using signaling contact ④. The reset terminal ⑤ is used for a remote reset of the electronic overload shutdown.
Ethernet/PROFINET cable (RJ plug-in connection 8P8C) are connected at the Ethernet/PROFINET interface ⑤ for PROFINET operation.

Connections and terminal designations	
① Line input **L1, L2, L3, PE**	Plug-in terminal with a screw connection
② Output **1**	Plug-in terminal with two screw connections
③ 0 Volt terminal **0 V**	Plug-in terminal with three screw connections
④ Signaling contact **11, 12, 14**	Common plug-in terminal with a screw connection
⑤ Remote reset **RST**	
⑤ PROFINET (2-port switch)	RJ plug connection 8P8C

See the diagram under Description of the basic devices (Page 13)

Terminal data 6EP3436-8SB00-2AY0:

	① + ② + ③	④	⑫ + ⑬
	SZS 0,6 x 3,5	SZS 0,4 x 2,5	SZS 0,6 x 3 / PZ1 / PH1
	Cu 1 x 0,08 - 4 mm^2	Cu 1 x 0,2 - 1,5 mm^2	-
	Cu 1 x 0,08 - 4 mm^2	Cu 1 x 0,2 - 1,5 mm^2	-
AWG	28 - 12	28 - 16	-
Nm	0,5 Nm	0,25 Nm	0,04 Nm *1)
	7 mm	7 mm	-

*1) Do not subject the end stop to high loads

Terminal data 6EP3437-8SB00-2AY0:

	①	② + ③	④	⑫ + ⑬
	SZS 0,6 x 3,5	SZS 0,8 x 4,5 / PZ1 / PH1	SZS 0,4 x 2,5	SZS 0,6 x 3 / PZ1 / PH1
	Cu 1 x 0,08 - 4 mm^2	Cu 1 x 0,2 - 10 mm^2	Cu 1 x 0,2 - 1,5 mm^2	-
	Cu 1 x 0,08 - 4 mm^2	Cu 1 x 0,5 - 10 mm^2	Cu 1 x 0,2 - 1,5 mm^2	-
AWG	28 - 12	24 - 8	28 - 16	-
Nm	0,5 Nm	0,6 Nm	0,25 Nm	0,04 Nm *1)
	8 mm	12 mm	7 mm	-

*1) Do not subject the end stop to high loads

PROFINET/Ethernet connection

Maximum length of the Ethernet/PROFINET cable: 100 m (90 m BASIC link plus 2 x 5 m CHANNEL link).

The interface corresponds to the standard full duplex up to 100 Mbit/s electrical (100BASE-TX) according to IEEE 802.3.

Properties of the interface:

- Transmission rate 10/100 Mbit/s
- Two RJ45 sockets, i.e. integrated switch, for RJ45 connector, cable type 100Base-TX (CAT5)
- Auto negotiation
- Auto crossover communication via TCP/IP and PROFINET

The physics of the Ethernet/PROFINET interface is implemented so that PROFINET IO according to standards IEC 61158 and IEC 61784-2 are possible. As a minimum, conformity Class B is maintained for PROFINET.

2.4.2 Expansion modules

The loads to be supplied are connected at output terminals ③. When required, a ground connection to the basic device and to additional supplementary modules can be established using ground terminal ④.

Connections and terminal designations	
③ Outputs **1, 2, 3, 4**	Two plug-in terminals with screw connection for each output
④ Ground terminal **GND**	Plug-in terminal with three screw connections

See the diagram under Description of the expansion modules (Page 15)

Terminal data 6EP4436-8XB00-0CY0, 6EP4437-8XB00-0CY0:

	③ + ④	⑦
	SZS 0,6 x 3,5	SZS 0,5 x 3,0 / PZ1 / PH1
	1 x 0,2 - 2,5 mm^2	-
	1 x 0,2 - 2,5 mm^2	-
AWG	24 - 12	-
Nm	0,6 Nm	0,04 Nm *1)
	7 mm	-

*1) Do not subject the end stop to high loads

2.4.3 Buffer modules

Note

Terminals, only for buffer modules with double-layer capacitors

The subsequently described terminals are only available for buffer modules with double-layer capacitors.

Using control contact (ON), the buffer readiness of the buffer module can be activated and deactivated and/or buffer mode exited.

Using signaling contact "Sufficient buffer readiness" (RDY) it can be interrogated as to whether the buffer module has reached an adequate charge state. Using signaling contact "Buffer mode" (OK) the system signals that it is currently in the buffer mode.

Connections and terminal designations	
④ Control contact ON **X1**, **X2**	Common plug-in terminal, each with a screw connection
⑤ Signaling contact "Sufficient buffer readiness" RDY **13**, **14**	
④ Signaling contact "Buffer mode" OK **23**, **24**	

See the diagram under Description of the buffer modules (Page 16)

Terminal data 6EP4293-8HB00-0XY0, 6EP4295-8HB00-0XY0:

	④ + ⑤ + ⑥
	SZS 0,4 x 2,5
	1 x 0,2 - 2,5 mm²
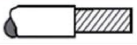	1 x 0,2 - 2,5 mm²
AWG	28 - 16
Nm	0,25 Nm
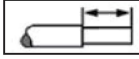	7 mm

2.5 Operator controls

2.5.1 Basic devices

There are two main operating areas at the SITOP PSU8600 basic devices.

- LED buttons ① and potentiometers (② and ③):

  The potentiometers are used to set the output voltage and response threshold of the output current. The output can be switched-on and switched-off using the buttons; further, a manual reset can be initiated after an electronic overload shutdown.

- The selector switch allows additional special functions to be activated via the position of the slider switches (④ to ⑪).

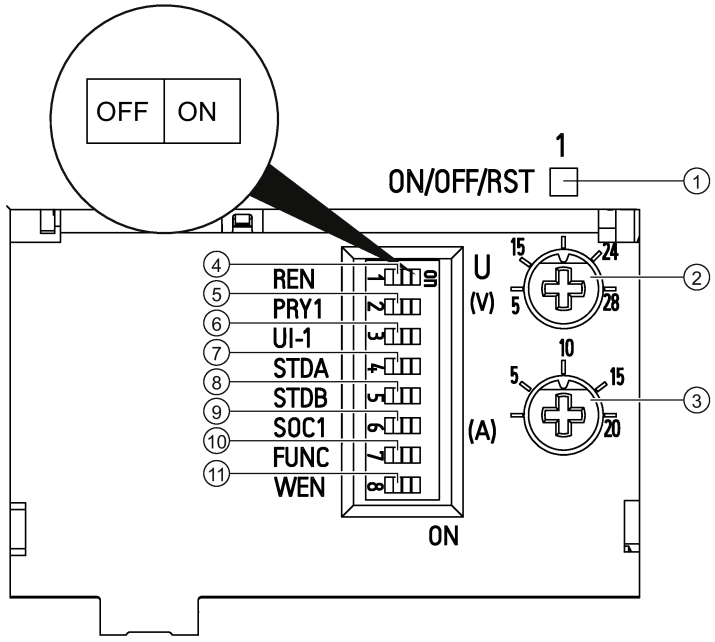

①	LED buttons "ON/OFF/RST"	Switches in and switches out the output, or resets the output after an electronic shutdown; see Setting the output voltage (Page 53) and Setting the response threshold value of the output current (Page 54).
②	Voltage potentiometer "U (V)"	Sets the voltage of the relevant output; see Switching an output on and off (Page 55).
③	Current potentiometer "I (A)"	Sets the response threshold of the output current; see Overload shutdown and carrying out a reset (Page 56).
④	DIP switch "REN"	Switches over between the MANUAL mode – with setting and operation at the device – and REMOTE mode with remote control via PROFINET; see MANUAL and REMOTE operating modes (Page 59).
⑤	DIP switch "PRY1"	Prioritizes output 1 in the case of a buffering (function is only available when a CNX8600 expansion module is being used); see Prioritization when the power fails (Page 62).

⑥	DIP switch "UI-1"	Defines the response of the output when an overload occurs; see ELECTRONIC SHUTDOWN and CONSTANT CURRENT operating modes (Page 64).
⑦, ⑧	DIP switch "STDA", "STDB"	Defines the switch-on sequence of the outputs (function is only available when a CNX8600 expansion module is being used); see Setting the on delay (Page 66).
⑨	DIP switch "SOC1"	Switchover between the regular and soft output characteristic, see Setting the output characteristic, see Setting the output characteristic (Page 69).
⑩	DIP switch "FUNC"	No function
⑪	DIP switch "WEN"	Activates and deactivates the integrated web server, see Activating the web server on the module (Page 71)

Protection and sealing

The operating elements, with the exception of the button, are protected against unauthorized operation by a transparent plastic cover. When required, this plastic cover can be sealed to prevent the operating elements being actuated by unauthorized personnel. For sealing, the sealing wire can be routed through an opening in the plastic cover and housing, as shown in the diagram below.

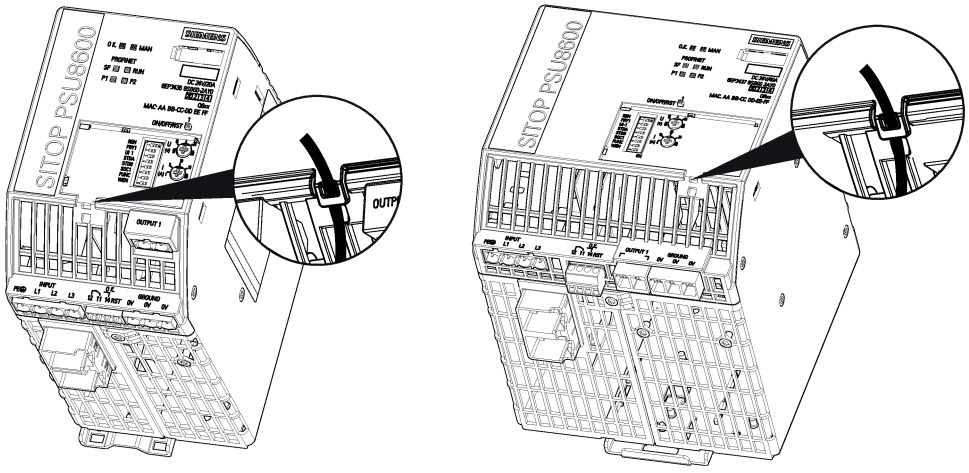

See also

Setting the output voltage (Page 53)
Setting the response threshold value of the output current (Page 54)
Switching an output on and off (Page 55)
Overload shutdown and carrying out a reset (Page 56)
MANUAL and REMOTE operating modes (Page 59)
Prioritization when the power fails (Page 62)
ELECTRONIC SHUTDOWN and CONSTANT CURRENT operating modes (Page 64)
Setting the on delay (Page 66)
Setting the output characteristic (Page 69)
Activating the web server on the module (Page 71)

2.5.2 Expansion modules

The SITOP CNX8600 expansion modules have a main operating area with potentiometers (① and ②) and an LED button ③: The potentiometers are used to set the output voltage and response threshold of the output current. The potentiometers can be individually set for each output. The individual outputs can be switched-on and switched-off using the buttons; further, each output can be manually reset after an electronic shutdown.

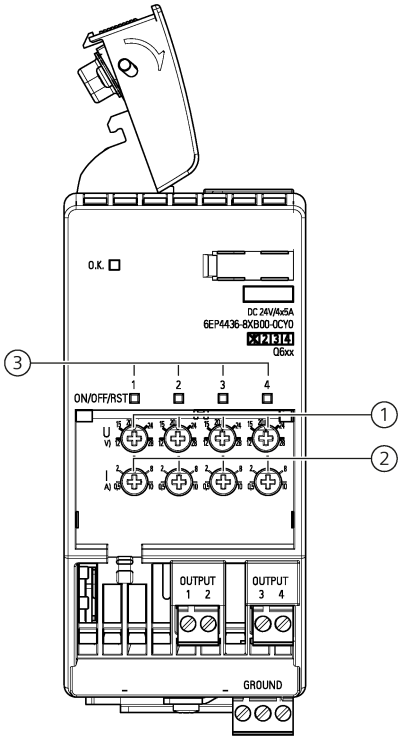

No.	Designation / labeling	Function
①	Voltage potentiometer "U (V)"	Sets the voltage of the relevant output; see Setting the output voltage (Page 53).
②	Current potentiometer "I (A)"	Sets the response threshold of the output current of the relevant output; see Setting the response threshold value of the output current (Page 54).
③	LED buttons "ON/OFF/RST"	Switches in and switches out the various outputs, or resets the particular outputs after an electronic shutdown; see Switching an output on and off (Page 55) as well as Overload shutdown and carrying out a reset (Page 56).

Protection and sealing

The operating elements, with the exception of the buttons, are protected against unauthorized operation by a transparent plastic cover. When required, this plastic cover can be sealed to prevent the operating elements being actuated by unauthorized personnel. For sealing, the sealing wire can be routed through an opening in the plastic cover and housing, as shown in the diagram below.

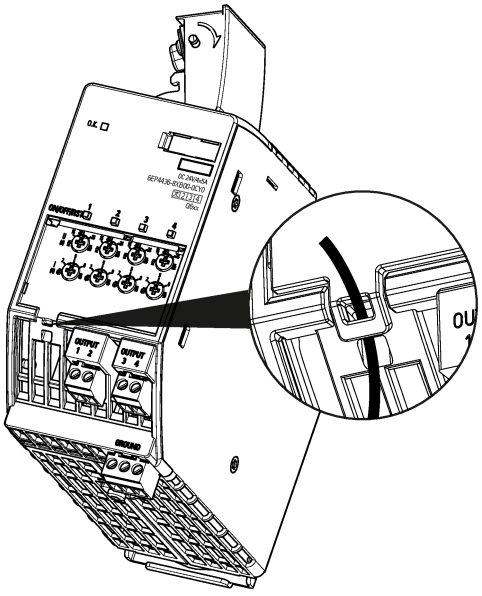

See also

Setting the output voltage and response threshold value of the output current (Page 53)

Overload shutdown and carrying out a reset (Page 56)

2.6 Displays

The operating state of the device and the operating state of the various outputs are displayed using multi-color LEDs.

Meaning of the LED displays

Symbols indicate the significance of each LED, which are listed in the following table.

Signaling	
○	LED is off.
●	LED is continuously on
✷ *x* / *y*	LED flashes in the interval *x* s on and *y* s off

2.6.1 Basic devices

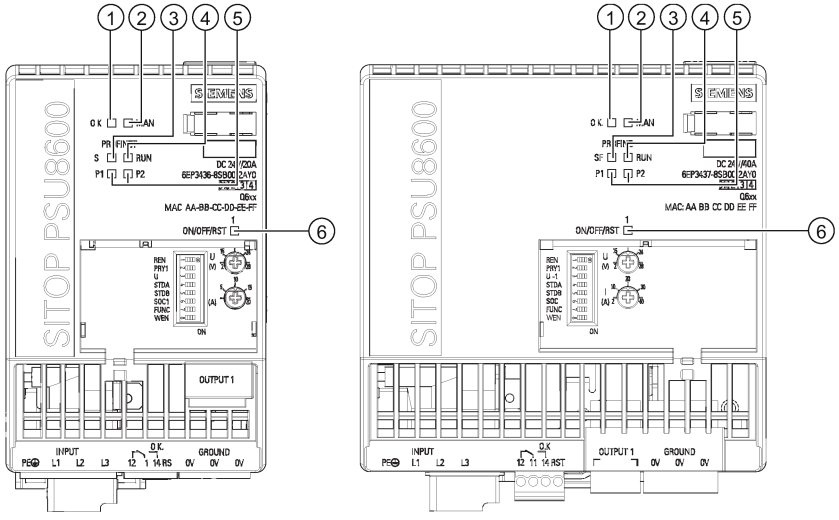

No.	Labeling	Signal type	Signaling
①	OK	LED	Device status
②	MAN	LED	Mode
③	SF	LED	Group error
④	RUN	LED	RUN/STOP
⑤	P1/P2	LED	Receive/transmit, port 1 and port 2
⑥	ON/OFF/RST	LED buttons	Operating mode of the output

States of the individual LEDs

Table 2- 4 "OK" LED ①

Signaling		
○	Off	Device is OFF or is powering up (booting)
●	Green	Normal operation
✷	Flashing green (1/1)	Phase dissymmetry or phase failure (detected from a total load current > 20 A, operation with rated load for approx. 10 min. is permissible)
✷	Flashing green (0.25/0.25)	System overload in normal operation: Total output power in the range 101 - 150 % (up to 149%: operation permissible for 5 s, 150 %: operation permissible for 200 ms)
●	Red	• ERROR OFF: Device has automatically shut down as a result of device over-temperature, phase dissymmetry, system overload • Internal device fault
✷	Flashing red (0.25/0.25)	• Device ready for the automatic ERROR OFF shutdown to be reset – or after a firmware update has been completed, by switching off the supply voltage and switching it on again (power OFF/ON) • Incorrect hardware configuration (REMOTE operating mode)
●	Yellow	Power failure, buffer operation active
✷	Flashing yellow (0.25/0.25)	System overload in buffer operation: Total output power in the range 101 … 150 % (operation is permissible for 5 s/min)
◐	Alternating, green/red (0.25/0.25)	Firmware being updated

Table 2- 5 LED "**MAN**" ②

Signaling		
○	Off	• Device is OFF or is powering up (booting) • REMOTE mode, i.e. parameterization and remote control via PROFINET or web server
●	Green	MANUAL mode, i.e. setting directly at the device
✷	Flashing green (1/1)	MANUAL mode; the mode has been changed in operation, settings directly at the device do not necessarily correspond to the active reference parameters.

Table 2- 6 LED "**SF**" ③ and "**RUN**" ④

Signaling				
LED "SF" ③		LED "RUN" ④		
○	Off	○	Off	Device is OFF, or there is no connection to a PROFINET IO controller
○	Off	✷	Flashing green (0.5/0.5)	Configuration by the PROFINET IO controller
○	Off	●	Green	Application started successfully, module OK.
●	Red	●	Green	Application started successfully, module not OK.
✷	Flashing red (0.1/0.1)	●	Green	Application running, diagnostics can be called
✷	Flashing red (0.5/0.5)	○	Off	Device identification requested via DCP (LED flashes for 3 s)
✷	Flashing red (0.5/0.5)	✷	Flashing green (0.5/0.5)	Firmware update

Table 2- 7 LED "**P1/P2**" ⑤

Signaling		
○	Off	Device is OFF or is not connected with the controller
●	Green	Device connected with controller, no activity.
◐	Green/orange alternately	Device connected with the controller, transmit/receive data (RX/TX).

Table 2- 8 LED "**ON/OFF/RST**" ⑥

Signaling		
○	Off	• Device is off or is powering up (booting) • Or ERROR OFF shutdown • Or incorrect hardware configuration (REMOTE operating mode) • or firmware being updated/completed.
●	Green	Normal operation, output current < response threshold value
✷	Flashing green (0.25/0.25)	Overload at the output: Output current 101…150 % of the response threshold (operation permissible up to 149 % for 5 s, 150 % for 200 ms)
✷	Flashing green (1/1)	For overload, the output current is limited • To the response threshold value for the duration of the overload (CONSTANT CURRENT operating mode) • to the rated value for 60 s for system overload
●	Red	Output automatically shut down due to • Overload exceeding the permissible time range (ELECTRONIC SHUTDOWN operating mode) • Overtemperature of the output
✷	Flashing red (0.25/0.25)	After automatic shutdown due to overload or overtemperature, output is ready for reset by pressing the button, reset signal or control command
✷	Flashing red (1/1)	Output shut down via control command (REMOTE operating mode)
●	Yellow	Output manually shut down using the button at the device

2.6.2 Expansion modules

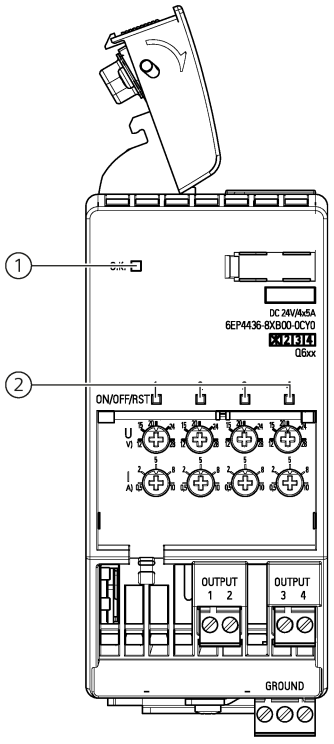

No.	Labeling	Signal type	Signaling
①	OK	LED	Device status
②	ON/OFF/RST	LED buttons	Operating state of the particular output

States of the individual LEDs

Table 2- 9 LED "**OK**" ①

Signaling		
○	Off	Device is OFF or is powering up (booting)
●	Green	Normal operation
●	Red	• ERROR OFF: Module automatically shut down due to overtemperature basic device or phase dissymmetry • System overload (limited for 60 s, followed by automatic return to normal operation) • Fault in the device or communication error to the basic device
✷	Flashing red (0.25/0.25)	• Device ready for the automatic ERROR OFF shutdown to be reset – or after a firmware update has been completed, by switching off the supply voltage and switching it on again (power OFF/ON) • Device shut down due to firmware update of another system component • Incorrect hardware configuration (REMOTE mode)
●	Yellow	Power failure, buffer mode active
●	Alternating, green/red (0.25/0.25)	Firmware being updated.

Table 2- 10 LED "**ON/OFF/RST**" ②

Signaling		
○	Off	• Device is off or is powering up (booting) • Or ERROR OFF shutdown • Or incorrect hardware configuration (REMOTE mode) • Or firmware being updated/completed.
●	Green	Normal operation, output current < response threshold value
✷	Flashing green (0.25/0.25)	Overload at the output: Output current 101…150 % of the response threshold (up to 149 %: operation permissible for 5 s, 150 %: operation permissible for 200 ms)
✷	Flashing green (1/1)	For overload, the output current is limited to the response threshold value (CONSTANT CURRENT mode)
●	Red	Output automatically switched off due to: • Overload exceeding the permissible time range (ELECTRONIC SHUTDOWN mode) • Output 1 prioritized for buffer mode • System overload • Overtemperature of the output (in pairs)
✷	Flashing red (0.25/0.25)	After automatic shutdown due to overload, system overload or overtemperature, output is ready for reset by pressing the button, reset signal or control command
✷	Flashing red (1/1)	Output shut down via control command (REMOTE mode)
●	Yellow	Output manually switched off using the button at the device.

2.6.3 Buffer modules

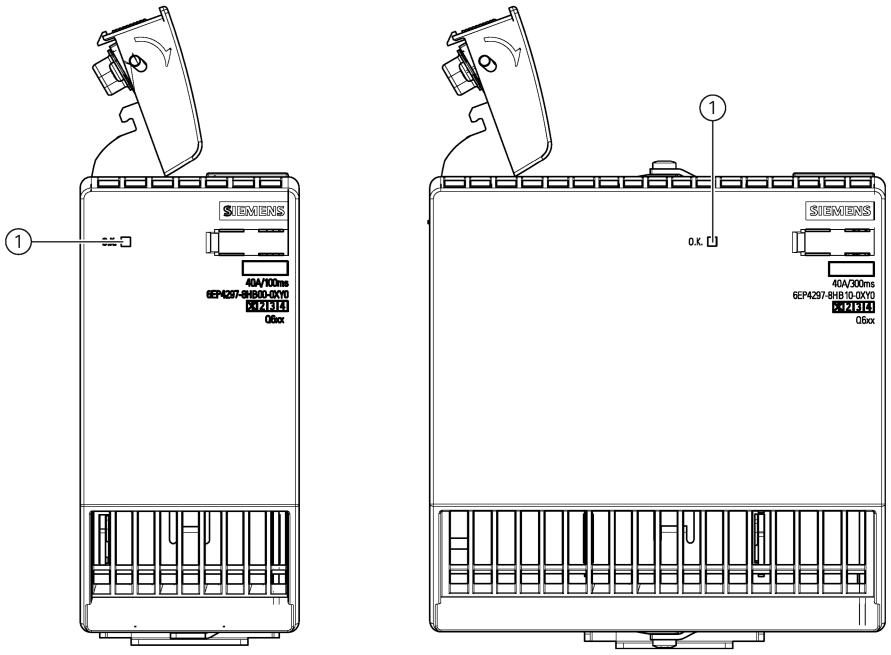

No.	Labeling	Signal type	Signaling
①	OK	LED	Device status

States of the individual LEDs

Table 2- 11 LED "**OK**" ①

Signaling		
○	Off	Device is OFF or is powering up (booting)
●	Green	Normal operation, module charged, complete buffer readiness
✷	Flashing green (1/1)	Module is being charged, buffer readiness partially available.
✷	Flashing green (0.25/0.25)	Module is being charged, buffer readiness not available
●	Red	• ERROR OFF: Module automatically shut down due to overtemperature basic device, phase dissymmetry • Fault in the device or communication error to the basic device
✷	flashing red (1/1)	Module deactivated via ON/OFF contact or remote command (no buffering when the power fails)
✷	Flashing red (0.25/0.25)	• Device ready for the automatic ERROR OFF shutdown to be reset – or after a firmware update has been completed, by switching off the supply voltage and switching it on again (power OFF/ON) • Charge is still available after power supply voltage OFF • Device shut down due to firmware update of another system component • Incorrect hardware configuration (REMOTE mode)
●	Yellow	Power failure, buffer mode active
●	Alternating, green/red (0.25/0.25)	Firmware being updated

2.7 Signaling contact/control contact

2.7.1 Basic devices

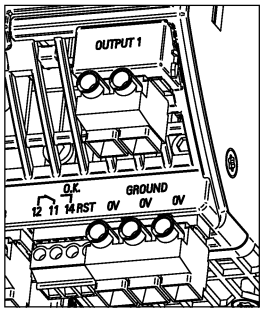

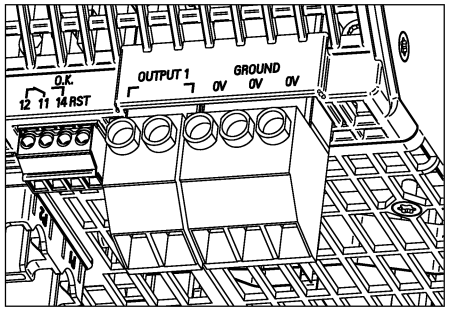

The signaling contact is a changeover contact (NC contact terminals "11" and "12", NO contact terminals "11" and "14") and facilitates processing of information about the operating state of the power supply system and the output.

Contacts	Explanation
11-12 open 11-14 closed	Device ready, the output is switched on or shut down either manually or via control command.
11-12 closed (= quiescent state) 11-14 open (= quiescent state)	In the ELECTRONIC SHUTDOWN operating mode: • Output switched off to due overload
	Other possible causes: • No output voltage (e.g. as there is no supply voltage) • Basic unit and supplementary modules shut down due to overtemperature • Basic unit and supplementary modules shut down due to phase dissymmetry or failure • Basic unit has limited power output and expansion module shut down due to system overload • Output shut down due to overtemperature • Communication error between the basic unit and supplementary module • Expansion module failure

2.7.2 Buffer modules

Note

Contacts only for BUF8600 buffer modules with double-layer capacitors

Control contact ON and signaling contacts RDY and OK are only available for BUF8600 buffer modules with double-layer capacitors.

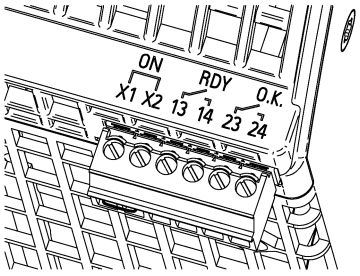

Buffer mode of the BUF8600 buffer module with double-layer capacitors can be prevented using control contact ON (terminals "X1" and "X2"), if a scheduled shutdown of the power supply is planned (e.g. for maintenance, period of no operation, end of work/shift). This avoids unnecessarily discharging the buffer module. Deactivation via the control contact is effective for all of the BUF8600 buffer modules in the system.

Control contact	Explanation
X1-X2 closed (delivery state: via wire jumper)	Buffer active, system is buffered when the power fails.
X1-X2 open	All of the buffer modules in the system deactivated; when the power fails, the system is not buffered.

The signaling contact "Sufficient buffer readiness" RDY is in the form of a relay contact (NO contact, terminals "13" and "14"), and signals that the buffer module is charged to x % (factory setting: 85 %) and is therefore ready for buffering. The threshold value can be freely parameterized via Industrial Ethernet / PROFINET interface.

For two BUF8600 buffer modules with double-layer capacitors in the system, the threshold that is set refers to the sum of the charged energy storage devices in both buffer modules. The signal "Sufficient buffer readiness" refers exclusively to the BUF8600 buffer modules with double-layer capacitors in the system.

BUF8600 buffer modules with electrolytic capacitors in the system are not taken into account.

Signaling contact	Explanation
13-14 open (quiescent state)	Charge state of the buffer module or two buffer modules < x % - or module fault
13-14 closed	Charge state of the buffer module or two buffer modules ≥ x %

The signaling contact "Buffer mode OK" is in the form of a relay contact (NO contact, terminals "23" and "24") and signals that the system is in buffer mode. This means that

critical processes can be immediately brought into a safe state, avoiding loss of data and additional damage.

For two BUF8600 buffer modules with double-layer capacitors in the system, both modules simultaneously signal buffer mode using the signaling contact. As a consequence, it is sufficient to wire one of the two contacts. The signal "Buffer mode" refers exclusively to the BUF8600 buffer modules with double-layer capacitors in the system.

BUF8600 buffer modules with electrolytic capacitors in the system are not taken into account.

Signaling contact	Explanation
23-24 open (quiescent state)	Power failure, system is buffered by the buffer module.
23-24 closed	Normal operation, buffer module is charged (if required).

2.8 Block diagrams

Basic SITOP PSU8600 device

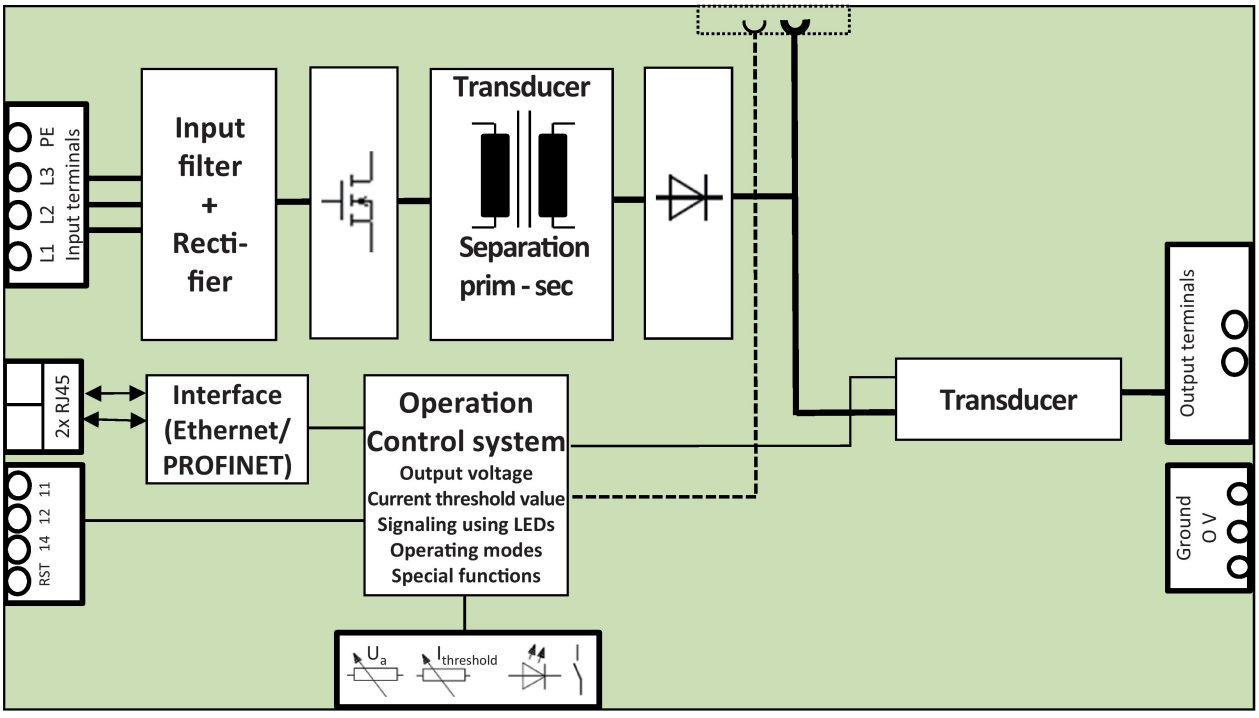

Expansion modules SITOP CNX8600

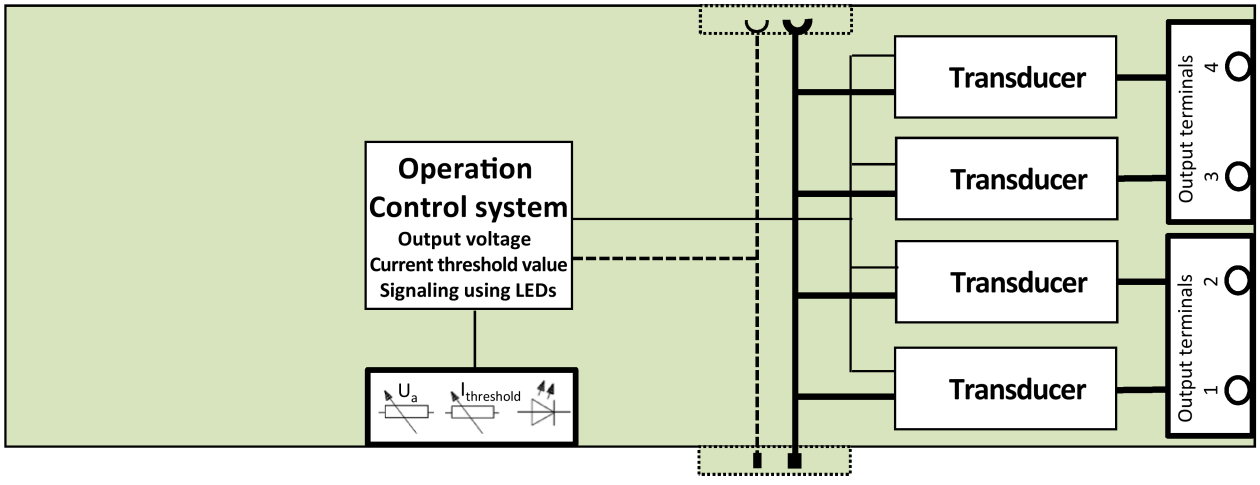

SITOP BUF8600 100 ms/40 A and SITOP BUF8600 300 ms/40 A buffer modules

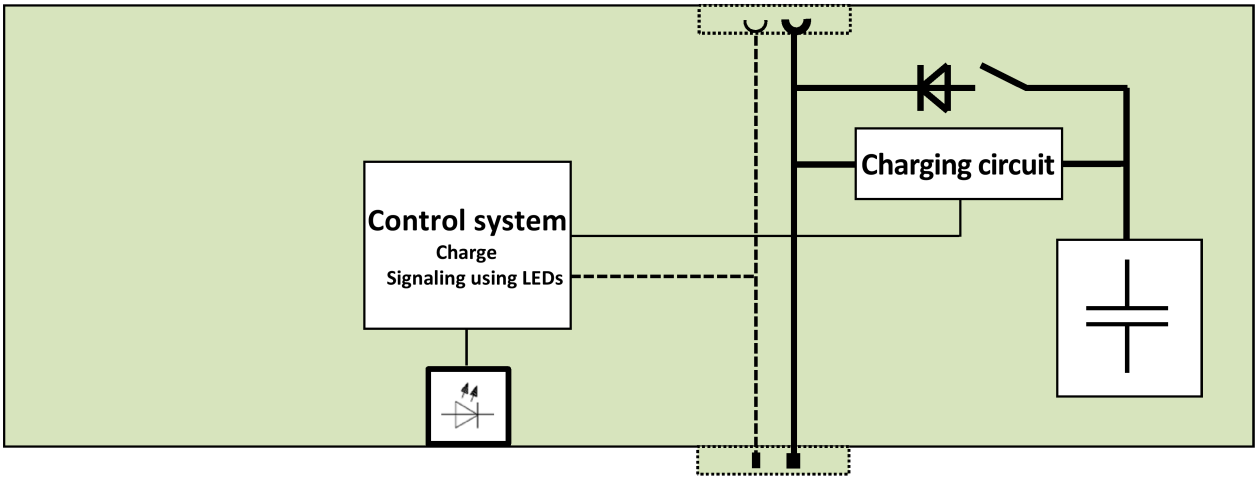

SITOP BUF8600 4 s/40 A and SITOP BUF8600 10 s/40 A buffer modules

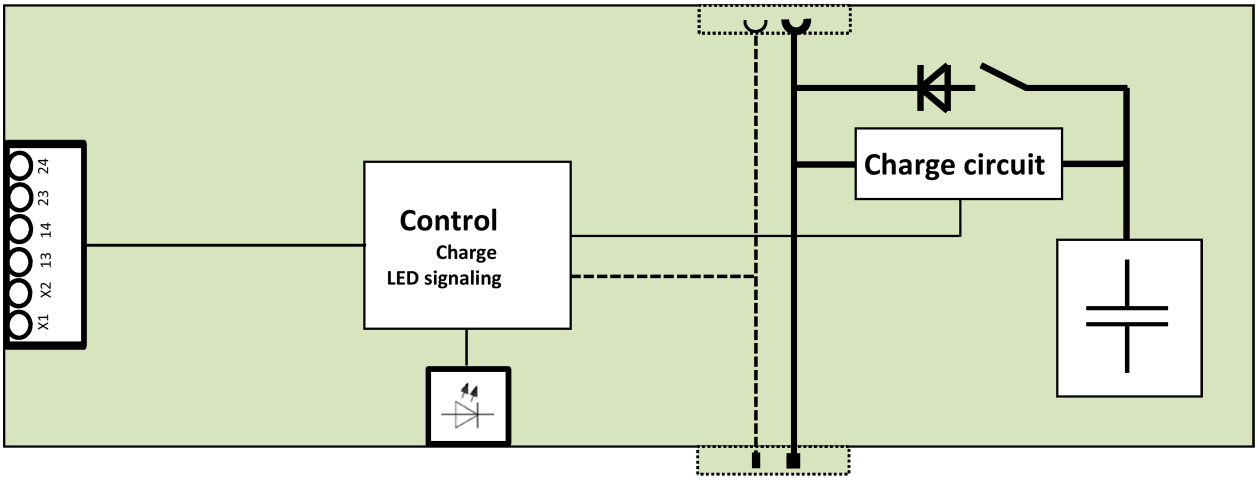

2.9 Dimensions and weights

SITOP PSU8600 basic devices

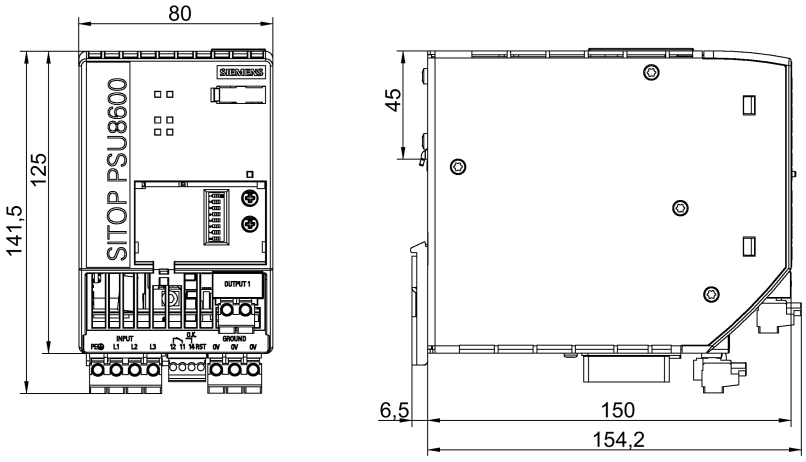

Image 2-2 Dimension drawing 6EP3436-8SB00-2AY0 front and left views

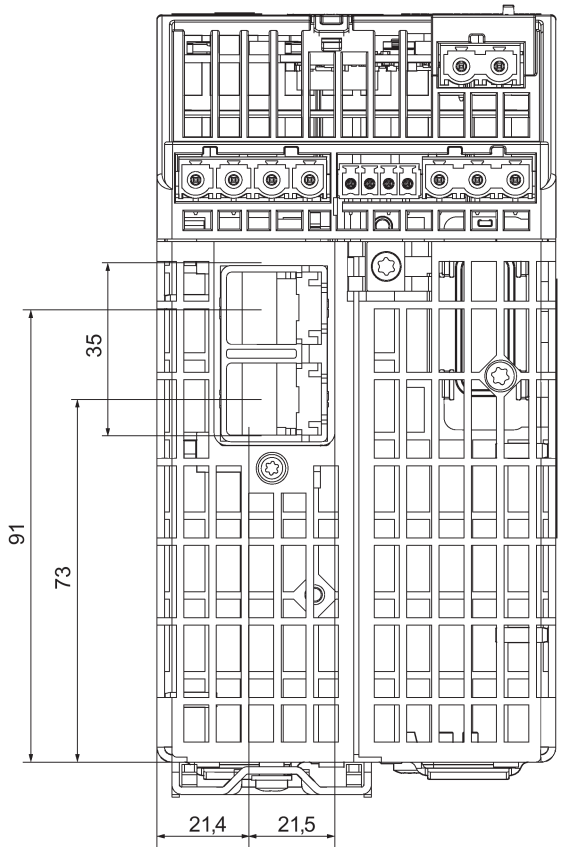

Image 2-3 Dimension drawing 6EP3436-8SB00-2AY0 view from below

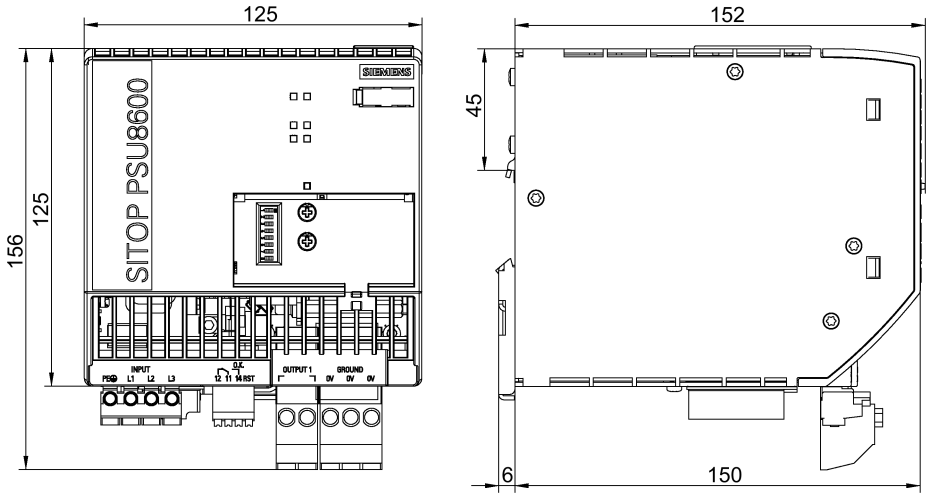

Image 2-4 Dimension drawing 6EP3437-8SB00-2AY0 front and left views

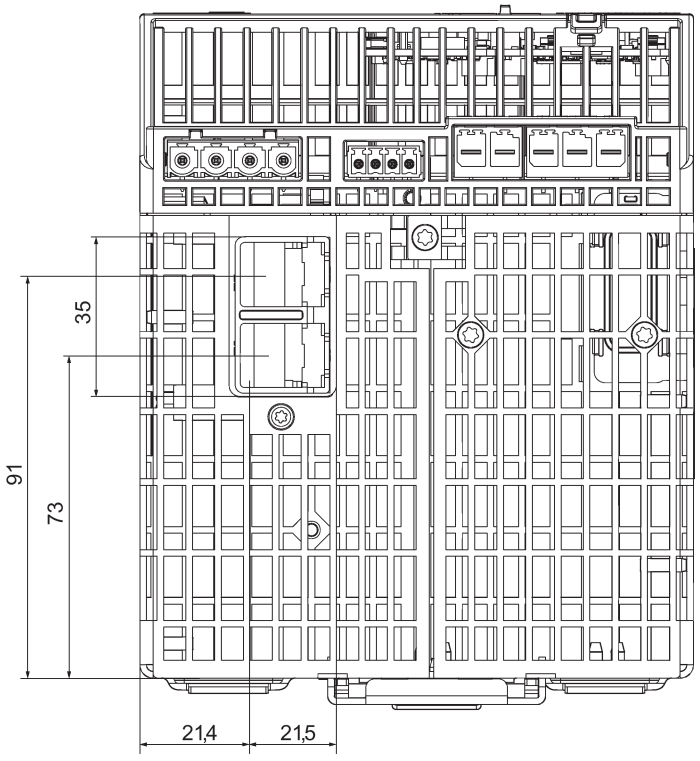

Image 2-5 Dimension drawing 6EP3437-8SB00-2AY0 view from below

Expansion modules SITOP CNX8600

The dimensions are identical for both versions.

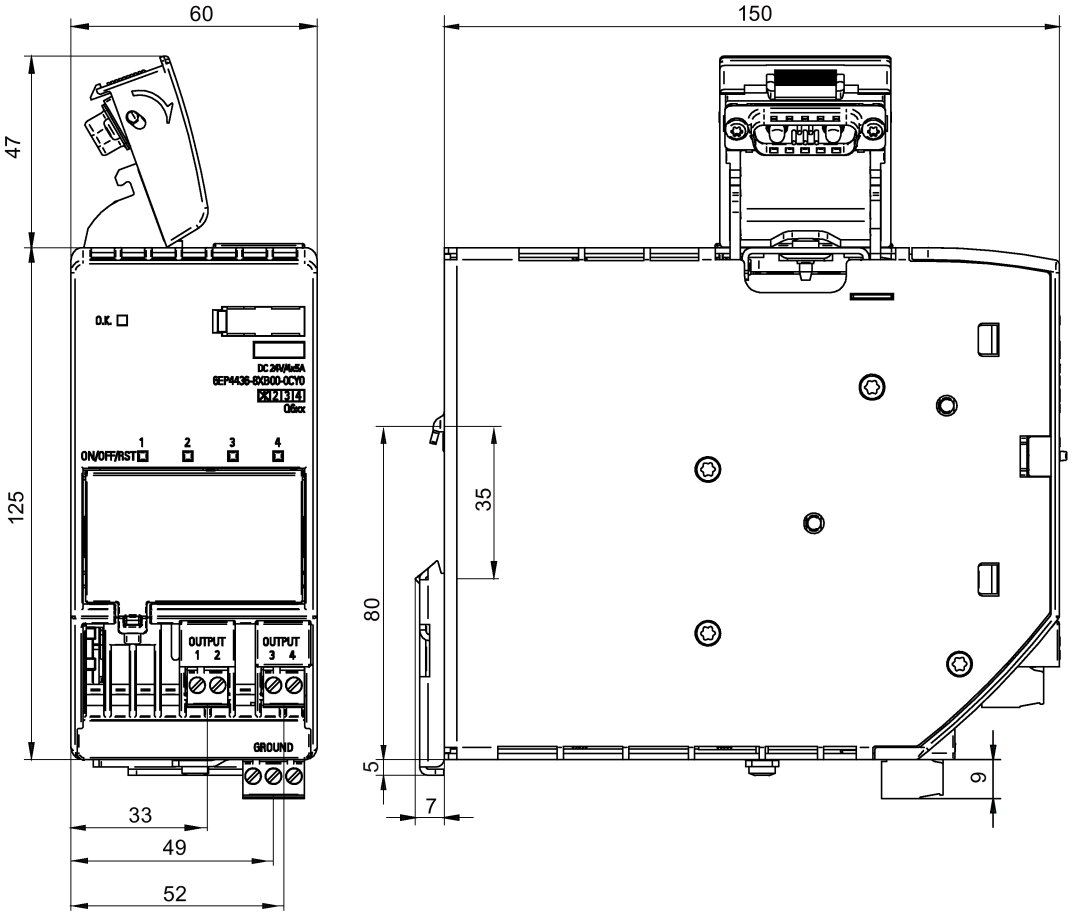

Image 2-6 Dimension drawing for 6EP4436-8XB00-0CY0 and 6EP4437-8XB00-0CY0

Buffer modules SITOP BUF8600

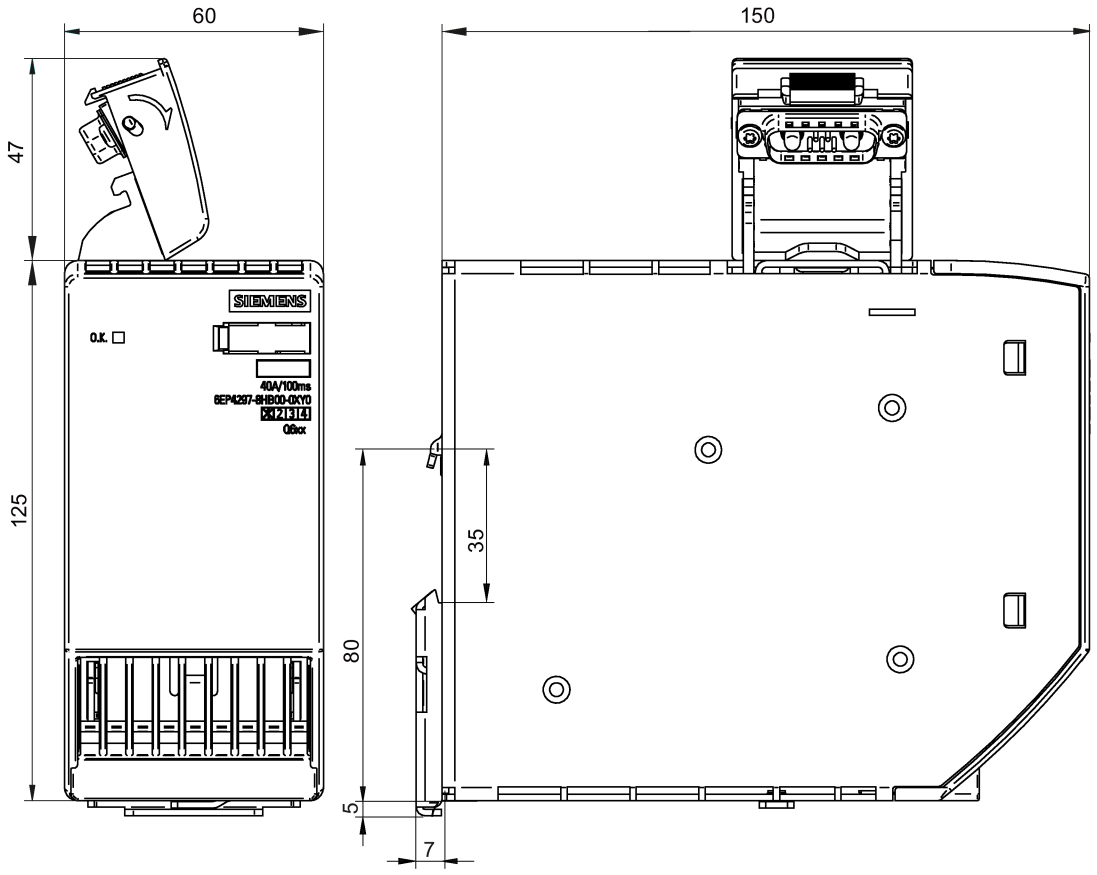

Image 2-7 Dimension drawing 6EP4297-8HB00-0XY0

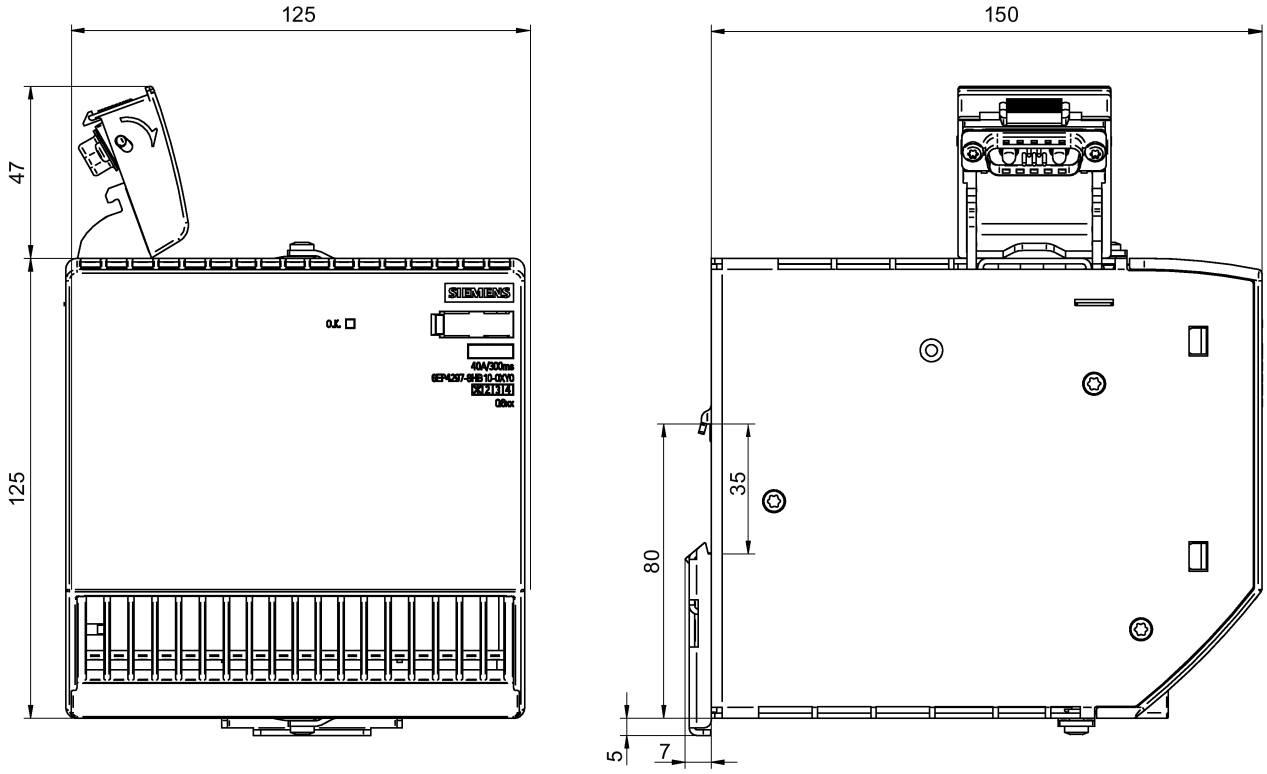

Image 2-8 Dimension drawing 6EP4297-8HB10-0XY0

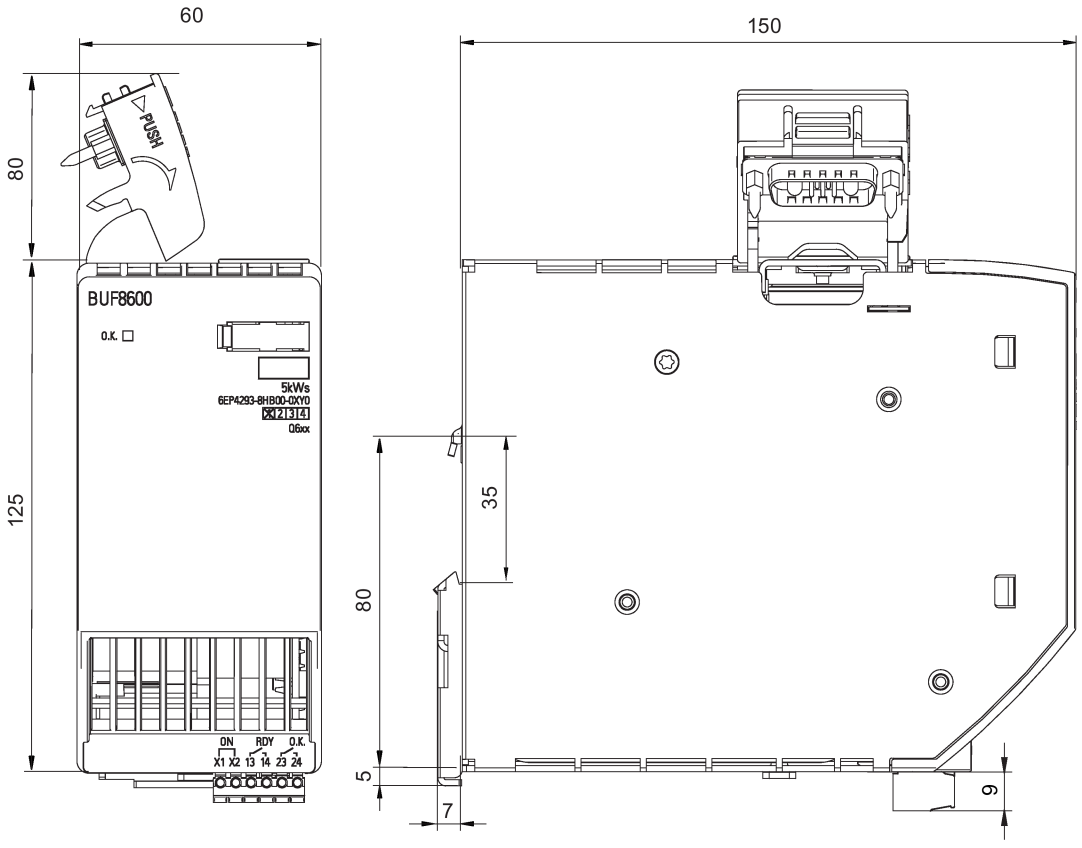

Image 2-9 Dimension drawing 6EP4293-8HB00-0XY0

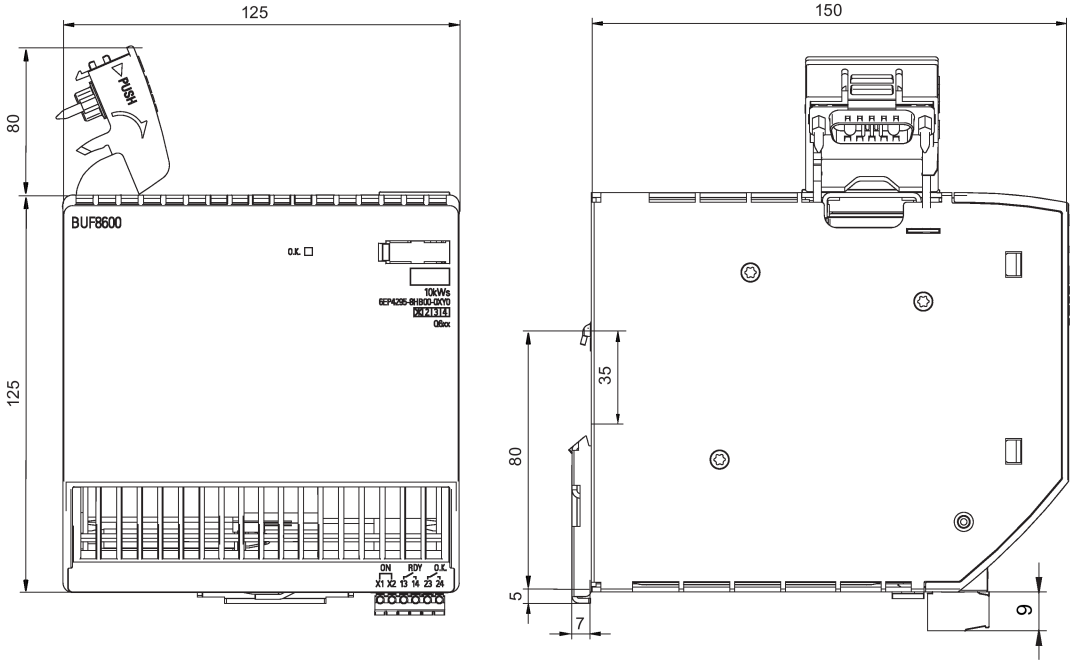

Image 2-10 Dimension drawing 6EP4295-8HB00-0XY0

Dimensions and weights

SITOP PSU8600 basic devices

	6EP3436-8SS00-2AY0	6EP3437-8SB00-2AY0
Dimensions (W × H × D) in mm	80 × 125 × 150	125 x 125 x 150
Weight	Approx. 1.78 kg	2.63 kg

Expansion modules SITOP CNX8600

	6EP4436-8XB00-0CY0 4 x 5 A	6EP4437-8XB00-0CY0 4 x 10 A
Dimensions (W × H × D) in mm	60 × 125 × 150	60 × 125 × 150
Weight	Approx. 1.15 kg	Approx. 1.15 kg

Buffer modules SITOP BUF8600

	6EP4297-8HB00-0XY0 100 ms at 40 A	6EP4297-8HB10-0XY0 300 ms at 40 A	6EP4293-8HB00-0XY0 4s at 40°A	6EP4295-8HB00-0XY0 10 s at 40 A
Dimensions (W × H × D) in mm	60 × 125 × 150	125 × 125 × 150	60 x 125 x 150	125 x 125 x 150
Weight	Approx. 1.33 kg	Approx. 2.26 kg	Approx. 1.25 kg	Approx. 1.95 kg

Operator control at the device

3

Operating the basic devices

Various settings can be made using the following operator controls - button ①, potentiometers ② and ③, and selector switches ④ to ⑪. All operator controls are located at the front.

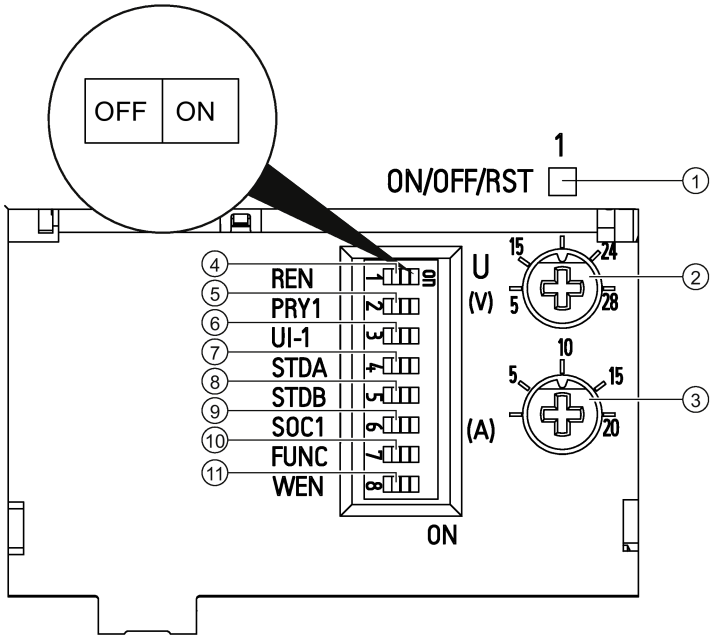

Note

Settings made at the basic device using the voltage potentiometer ②, current potentiometer ③ and DIP switches ⑤ to ⑪ are only made in the MANUAL mode (see MANUAL and REMOTE operating modes (Page 59)). These operator controls are deactivated in the REMOTE operating mode.

The output can be switched-on/switched-off and reset in any mode using button ①.

Operating the expansion modules

Various settings can be made using the following operator controls - button ① and potentiometers ② and ③. All operator controls are located at the front.

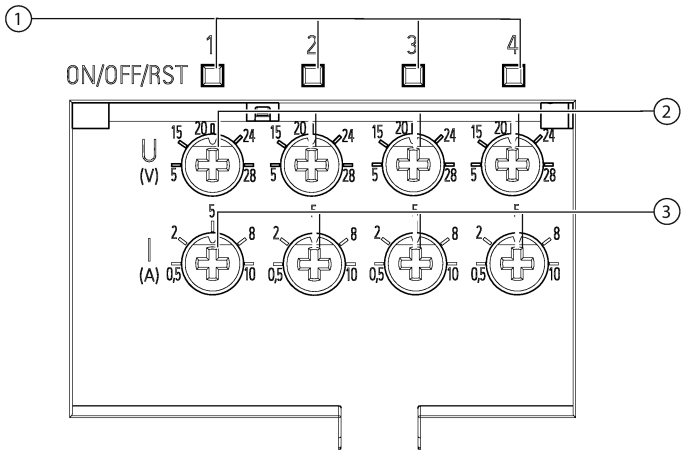

Note

Settings made at the expansion module using voltage potentiometer ② and current potentiometer ③ are only made in the MANUAL mode (see MANUAL and REMOTE operating modes (Page 59)). These operator controls are deactivated in the REMOTE operating mode.

The outputs can be switched-on/switched-off and reset in any mode using button ①.

3.1 Setting the output voltage and response threshold value of the output current

The potentiometer of the output is used to set the output voltage and the response threshold value of the output current.

Note

When the REMOTE operating mode is activated (see MANUAL and REMOTE operating modes (Page 59)) changes made to the settings of the potentiometer for the output voltage and response threshold value of the output current have no effect.

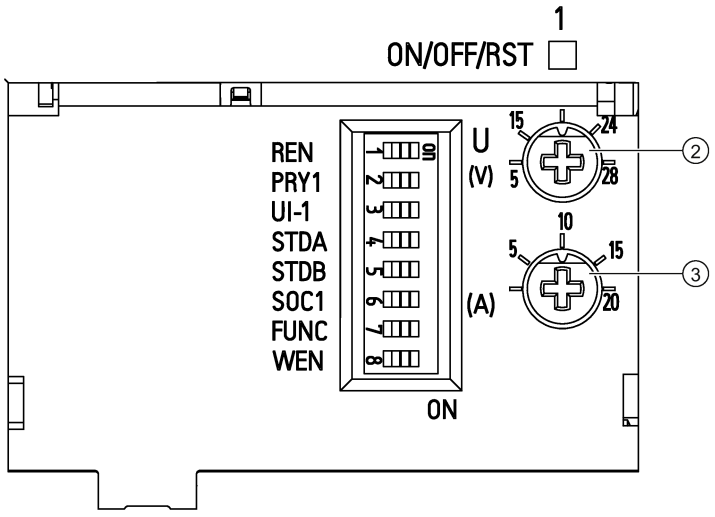

② Voltage potentiometer for the output
③ Current potentiometer for the output

3.1.1 Setting the output voltage

1. Using the appropriate screwdriver, rotate the voltage potentiometer for the output so that the notch in the inner ring points to the required value (the following diagram shows a setting for 15 V).

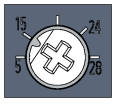

Values between 5 and 28 Volt can be set.

When supplied, the output voltage is set to 24 Volt.

3.1.2 Setting the response threshold value of the output current

1. Using the appropriate screwdriver, rotate the current potentiometer for the output so that the notch in the inner ring points to the required value (the following diagram shows a setting for 2 A).



Depending on the type, at the basic devices and expansion modules, values of 2 to 20 A or from 4 to 40 A can be set.

For the expansion modules, depending on the type, values from 0.5 up to 5 A – or from 0.5 up to 10 A can be set.

When delivered, the output current is set to the maximum possible value.

3.2 Switching an output on and off

The output can be switched-on and switched-off using the button.

The output is manually shutdown when the device is supplied.

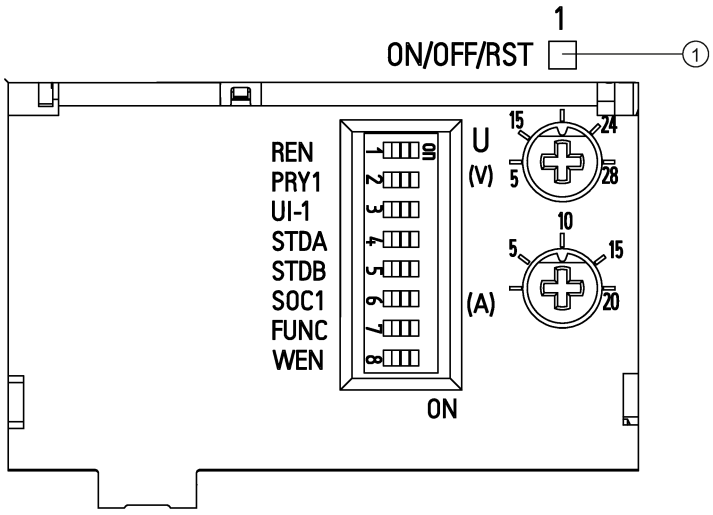

① Button (illuminated with an LED)

Shutting down an output

When the output is switched-on, the LED in the button is lit green.

1. You can switch off the output by pressing the button.

   LED is lit yellow (output manually shutdown).

Note

An output that has been manually switched-off (LED in the button is lit yellow) can only be manually switched-on again by manually pressing the button again. It is neither possible to switch-on the output that has been manually switched-off using remote RESET – nor using a control command in the REMOTE operating mode.

The output that has been manually switched-off (LED in the button is lit yellow) also remains saved when switching-off the device, and is manually switched-off the next time that the device powers up.

Switch on output

The LED in the button is lit yellow when the output is manually shutdown.

1. You can switch off the output by pressing the button.

   The LED is lit green (output is switched on).

3.3 Overload shutdown and carrying out a reset

For the device output, in the ELECTRONIC SHUTDOWN mode, overload is permitted for a defined time. The output is electronically shut down after the limit value has been exceeded (see the following diagram).

Shutdown characteristic

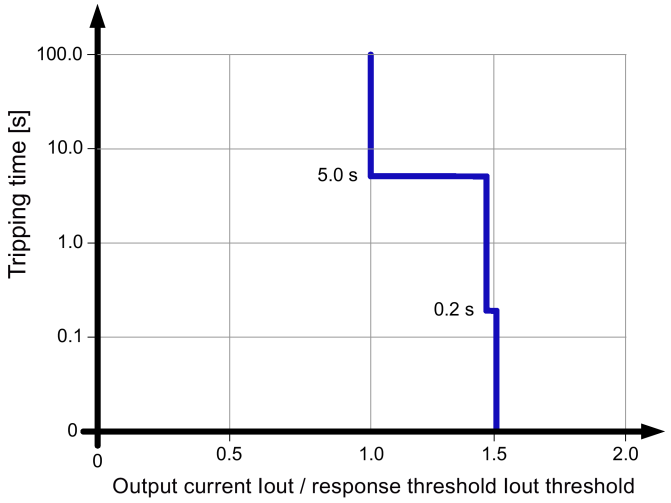

An output current up to the value set using the current potentiometer is continuously permissible (LED "ON/OFF/RST" of the output is lit green).

In the range 101...149 % of the setting value of the current potentiometer, an overload current is permissible for 5 seconds (LED "ON/OFF/RST" of the output flashes green), then the output is electronically shut down (LED "ON/OFF/RST" of the output is lit red).

In the range > 149 % of the setting value of the current potentiometer, the current is limited to 150 %, after approx. 200 ms the output is electronically shut down (LED "ON/OFF/RST" of the output is lit red).

Using a reset, the output that has been automatically shut down can be switched-on again after a wait time of 5 seconds (LED "ON/OFF/RST" of the output flashes red).

Carrying out a reset with the button at the device

The output can be reset using the button. This resets the electronic shutdown of the output, caused by an overload condition.

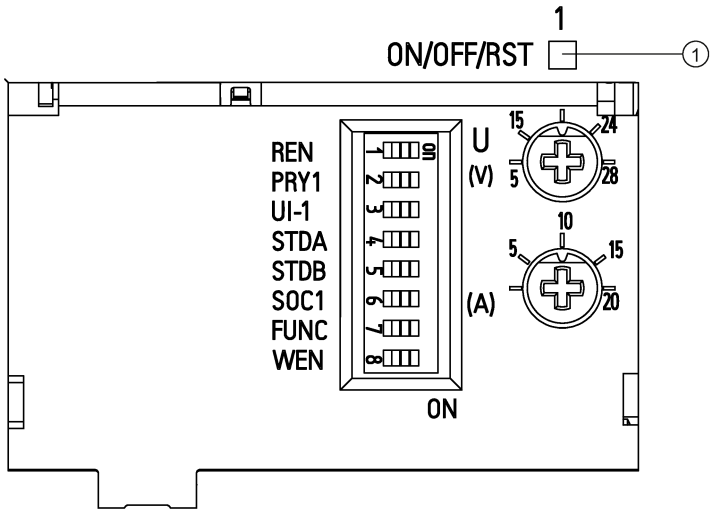

① Button (illuminated with an LED)

The initial situation is an electronic shutdown as a result of an overload condition. This is signaled using LED "ON/OFF/RST" in button ①:

LED in the button	Meaning/handling
Lit red	Electronic shutdown as a result of an overload; wait time until a reset is possible: 5 seconds.
Flashes red	Output ready for a reset; press the button to switch-on the output again.
Lit green	The reset was carried out, the output was switched-on again.

Procedure

1. After an electronic shutdown (LED "ON/OFF/RST" of the output is lit red), allow a wait time of 5 seconds to elapse.
2. Press the button of the output if this is ready for a reset (LED "ON/OFF/RST" of the output flashes red).

Electronic shutdown was reset, and the output has been switched-on again (LED "ON/OFF/RST" of the output is lit green).

Note

If, after a reset, the cause of the overload is still present, then the output is again automatically shut down according to the shutdown characteristics described previously.

Before carrying out a reset, remove the cause of the overload to prevent a new shutdown.

Remote reset via terminal RST

The reset can be alternatively carried out using a remote reset signal. The non-isolated 24 V input (referred to terminal "0V" of the device) at terminal "RST" can be used. A reset is carried out for an input level of > 15 V for at least 100 ms.

Procedure

Connect a voltage of > 15 V for at least 100 ms to terminal "RST".

The reset is carried out.

Note

If a switch-on delay of the output is defined (this function is only available when operated together with a CNX9600 expansion module) when switching on, this is not taken into account for a reset initiated using a remote reset signal.

Note

The rising edge of the reset signal is evaluated; this means for an additional reset signal, the voltage level must first drop down to below 13 V.

3.4 MANUAL and REMOTE operating modes

When the device powers up in the MANUAL operating mode, the settings, which were made directly at the device with the potentiometers and selector switches, apply. For an unchanged system configuration, the output is activated with the last operating status before shutdown.

When the device powers up in the REMOTE operating mode, the configuration parameter set, assigned to the device by the associated control, applies. For an unchanged system configuration, the output is activated with the parameters and operating states saved in the configuration.

Was the last operating state of an output before shutdown

- "Manual shutdown" (LED "ON/OFF/RST" of the output is lit yellow),
- "Automatic shutdown due to overload" (LED "ON/OFF/RST" of the output is lit red)

  or

- "Ready for reset" (LED "ON/OFF/RST" of the output flashes red),

then these operating states are assumed again when the system starts.

In the REMOTE operating mode, the operating state and parameters of the output can be changed in operation, controlled by the program.

Note

In the REMOTE mode, in some instances, extended special functions can be selected for the output via the configuration, which are not available in the MANUAL mode. You can find more information on this at Engineering and remote access (Page 115).

Note

In order to ensure that in the MANUAL and REMOTE operating modes, the device operates with the required device settings and/or reference parameter sets, the operating modes should only be switched over when the power supply system is in a no-voltage state.

The switchover is made at the selector switch (see operator controls) with the designation "REN" ④.

When delivered, DIP switch "REN" is in position "OFF" (operating mode MANUAL).

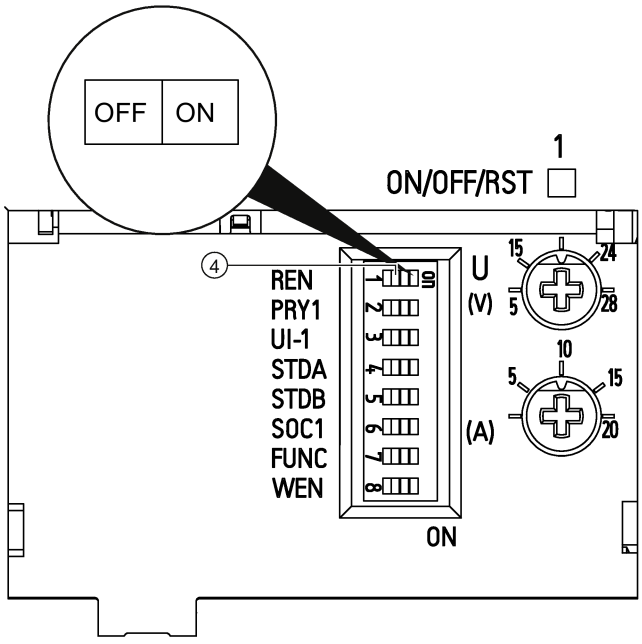

Activating the MANUAL operating mode

With the power supply system shut down, bring DIP switch "REN" into position "OFF" (left), to activate the MANUAL operating mode.

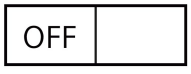

Note

When switching over from the REMOTE into the MANUAL mode in operation, the output maintains its particular state. Initially, the reference parameters for remote operation remain active. The voltage and current values can be changed by actuating the potentiometers at the device, or as the case may be, once the remote setpoints have been fallen below. The DIP switches only become active after they have been actuated.

Activating the REMOTE operating mode

With the power supply system shut down, bring DIP switch "REN" into position "ON" (right), to activate the REMOTE operating mode.

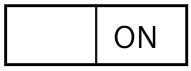

NOTICE

Suddenly changing the operating state of the device.

When switching over from the MANUAL into the REMOTE mode in operation, the output initially maintains its particular state. The settings of the potentiometers and DIP switches at the device remain active until the new reference parameters can be loaded into the device from an associated control system. This can happen undesirably as a result of a lost connection or when establishing a connection to the control for the first time – and can cause a sudden change of the device operating state (e.g. another output voltage)!

Only switch over the operating mode when the power supply system is shut down, or before switching over in operation, ensure that the remote configuration corresponds to the actual device settings.

3.5 Prioritization when the power fails

Note

Function is only available when operated with a CNX8600 expansion module

When the power fails, output 1 of the basic unit can be prioritized so that it is still supplied.

Prioritizing output 1 means that the longest possible buffer time is ensured at this output. If output 1 is prioritized, all of the remaining outputs are shut down at approximately half of the nominally available buffer time for the remaining duration of the power failure. LEDs "ON/OFF/RST" of the outputs that have been shut down are lit red. When the line supply returns, the outputs that have been shut down are automatically switched-on again.

For the basic device type, the nominal buffer time is typically 15 ms; the buffer time can be extended using additional buffer modules.

Note

The prioritization when the power fails may only be switched over when the power supply system is in a no-voltage condition.

The switchover is made at selector switch (see operating controls) with the designation "PRY 1" ⑤.
When delivered, DIP switch "PRY 1" is in position "OFF" (prioritization deactivated).

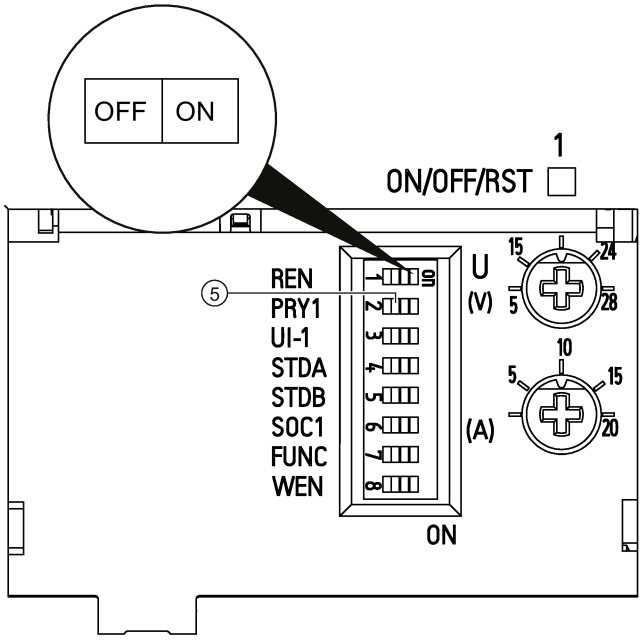

All outputs have the same priority during buffering

With the power supply system shut down, bring DIP switch "PRY 1" into position "OFF" (left), so that all outputs have the same priority when buffering is required.



Prioritizing output 1 during buffering

With the power supply system shut down, bring DIP switch "PRY 1" into position ON (right), so that output 1 of the basic unit has priority when buffering is required.

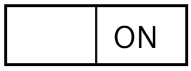

Note

Outputs 2...n, which are shut down when the power fails as output 1 has priority, are automatically switched-on again when the line supply returns!

3.6 ELECTRONIC SHUTDOWN and CONSTANT CURRENT operating modes

Two overload responses can be defined for output 1:

- In the ELECTRONIC SHUTDOWN operating mode, overload is permitted for a defined time. The output is electronically shut down after the limit value has been exceeded (see Overload shutdown and carrying out a reset (Page 56)).
- In the CONSTANT CURRENT operating mode, an overload current is continually permissible (U/I curve) according to a defined characteristic. The overload current is limited to a maximum of 150 % of the setting value of the current potentiometer for a duration of 5 seconds (LED "ON/OFF/RST" of output 4 quickly flashes green); the current is then limited to 100 % of the setting value (LED "ON/OFF/RST" of the output slowly flashes green) as long as there is an overload condition.

  In addition, in this operating mode, if a CNX8600 expansion module is not being used, a brief Power Boost (300 % for 25 ms) is provided so that the downstream circuit breaker can trip when an overload condition occurs.

Note

How the system responds to overload may only be switched over when the power supply system is in a no-voltage state.

The switchover is made at the selector switch (see operator controls) with the designation "UI-1" ⑥.
When delivered, DIP switch "UI-1" is in position "OFF" (mode ELECTRONIC SHUTDOWN).

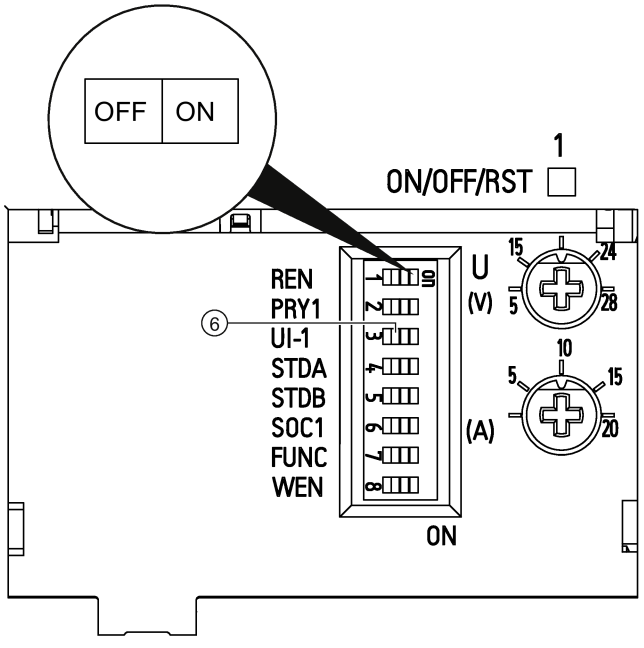

Electronic shutdown

With the power supply system shut down, bring DIP switch "UI-1" into position "OFF" (left), to activate the ELECTRONIC SHUTDOWN mode.



Constant current

With the power supply system shut down, bring DIP switch "UI-1" into position "ON" (right), to activate the CONSTANT CURRENT mode.

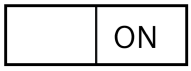

3.7 Setting the on delay

In order to reduce the load on the overall SITOP PSU8600 power supply system as a result of simultaneous switch-on current peaks of the loads at the output of the basic device and at the outputs of the expansion modules, a switch on delay between the outputs can be selected when switching on.

When the on delay is activated, the outputs are sequentially switched-on with a 25 ms or 100 ms delay time between the outputs, or "load optimized". For a load-optimized on delay, after 100 ms, for the previous output n it is additionally checked as to whether the output current lies below the selected response threshold value. Output n+1 is switched-on as soon as this is the case. Outputs that have been shut down are not taken into account and are skipped.

Note

The on delay time may only be switched over when the power supply system is in a no-voltage state.

Note

The switch-on delay is only possible when operating with an CNX8600 expansion module - and is then applicable for all outputs of the power supply system.

When the switch-on delay is activated, the outputs are switched-on in the following sequence -

output of the basic device → outputs of expansion modules 1 → 2 → 3 → 4 → … → n.

The switchover is realized at the selector switch (see operator controls) with the designations "STDA" ⑦ and "STDB" ⑧.

When delivered, DIP switches "STDA" and "STDA" are in the "OFF" position (no switch on delay).

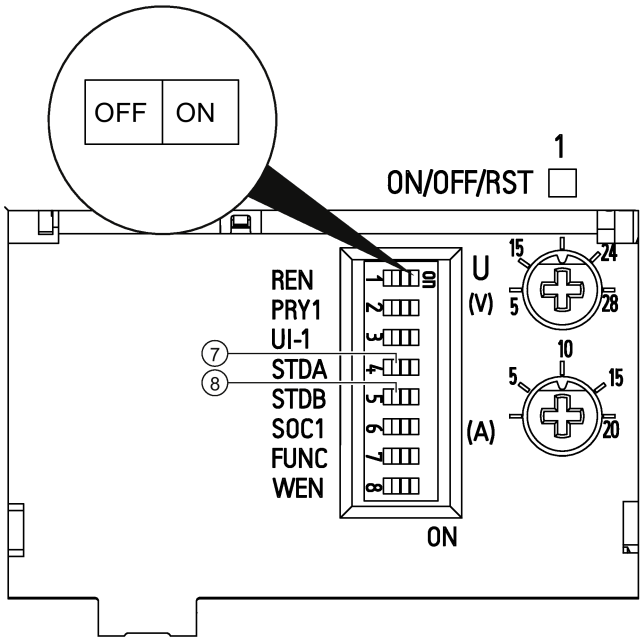

No on delay

With the power supply system shut down, bring both DIP switches "STDA" and "STDB" into position "OFF" (left), to deactivate on delay.

STDA

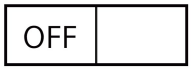

STDB

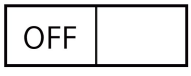

25 ms on delay

With the power supply system shut down, bring DIP switch "STDA" into position "ON" (right) and "STDB" into position "OFF" (left) in order to set the on delay to 25 ms.

STDA

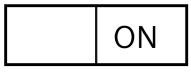

STDB



100 ms on delay

With the power supply system shut down, bring DIP switch "STDA" into position "OFF" (left) and "STDB" into position "ON" (right) in order to set the on delay to 100 ms.

STDA



STDB

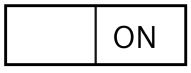

Load-optimized on delay

With the power supply system shut down, bring both DIP switches "STDA" and "STDB" into position "ON" (right) to activate load-optimized on delay.

STDA

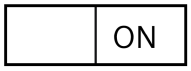

STDB

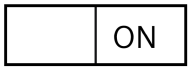

3.8 Setting the output characteristic

For the standard output characteristic of the basic SITOP PSU8600 device, the output voltage is regulated to obtain a constant value independent of the output current. If the "soft" output characteristic is selected, then the output voltage slightly decreases as the output current increases. This output response can be used so that when two basic devices are connected in parallel to increase the power rating, the basic devices are more uniformly utilized.

The switchover is made at the "SOC1" DIP switch ⑨.

When delivered, the "SOC1" DIP switch is in the "OFF" position (standard output characteristic).

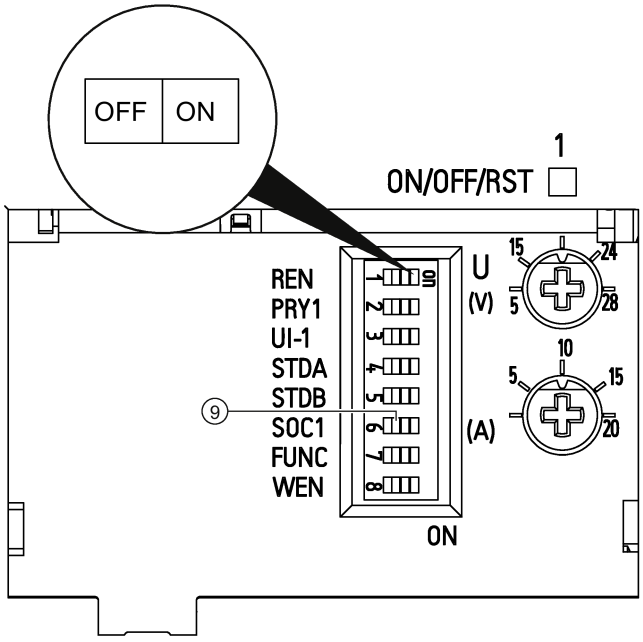

Selecting the standard output characteristic

Bring DIP switch "SOC1" into the "OFF" position (left) to select the standard output characteristic for the output.

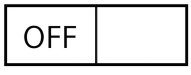

Selecting the soft output characteristic

Bring DIP switch "SOC1" into the "ON" position (right) to select the "soft" output characteristic for the output.

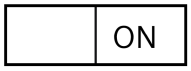

Note

When the "soft" output characteristic is selected, at the full, rated output current, the highest output voltage can no longer be reached. With increasing output current, in the range from no-load operation to rated output current, the output voltage linearly decreases by a value of approximately 1.2 V.

3.9 Activating the web server on the module

The basic SITOP PSU8600 device has an integrated web server. This facilitates remote monitoring and diagnostics, for example to interrogate actual currents and messages/signals. Further, the actual module configuration can be viewed, if necessary changed and externally saved to a file and archived. In addition, it is possible to read the "MANUAL configuration", and to transfer this into the "Remote configuration".

The switchover is made at the DIP switch (see operator controls), designated "WEN" ⑪.

When delivered, DIP switch "WEN" is in the "OFF" position (web server deactivated).

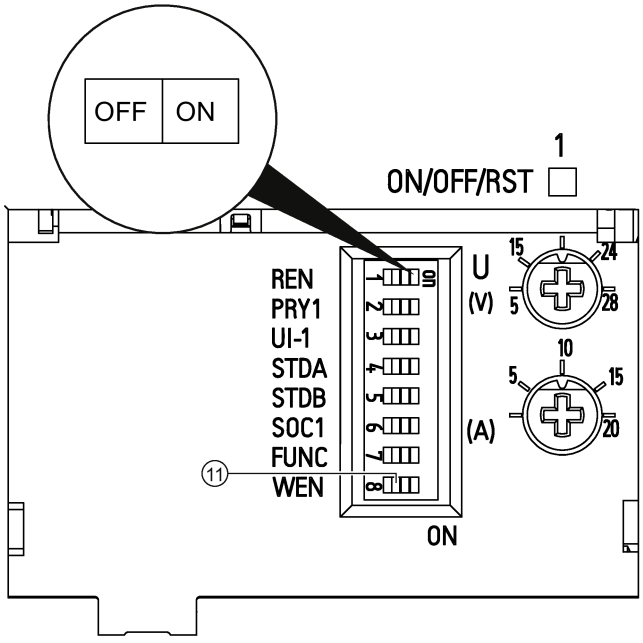

Deactivating the web server

Bring DIP switch "WEN" into the "OFF" position (left) to deactivate the web server integrated in the module.



Activating the web server

Bring DIP switch "WEN" into the "ON" position (right) to activate the web server integrated in the module.

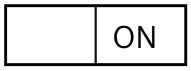

Note

No write access when the connection is active

If the SITOP PSU8600 has an active connection to a control system (relation application), then the parameters can only be read-accessed. It is still possible to update the firmware - and save and delete the alarm list. If there is no active connection, then parameters can also be write accessed via the web server.

You can find additional information about the integrated web server in ChapterWeb server (Page 162).

3.10 Monitoring functions

3.10.1 Overtemperature monitoring functions

SITOP PSU8600 basic units and SITOP CNX8600 expansion modules have integrated overtemperature monitoring functions. The outputs are shut down if the internal temperature is inadmissibly high.

Take the following steps after a shutdown as a result of an inadmissibly high internal temperature:

1. Check the mounting clearances of the devices, see Standard mounting position (Page 97) and Other mounting positions (Page 99).
   Excessively low mounting clearances cause overheating.
2. Measure whether the ambient temperature is permissible, see Environmental conditions (Page 239).

Identifying a shutdown due to an inadmissible temperature

Basic unit

If an inadmissibly high temperature is detected inside the basic device, the output of the basic device and the expansion modules being used are switched off.

A shutdown as a result of an inadmissibly high temperature inside the basic units is signaled by:

- Red LED "OK" ① at the basic unit and at the supplementary modules
- LEDs "ON/OFF/RST" ② go dark
- The signaling contact at the basic unit

Outputs

If an inadmissibly high temperature is detected at an output, then the outputs at the expansion modules are shut down in pairs (1 and 2 or 3 and 4). The remaining outputs remain switched on.

A shutdown as a result of an inadmissibly high temperature at an output is signaled by:

- Green LED "OK" ① at the basic device or at the expansion module
- Red LEDs "ON/OFF/RST" ② of the output at the basic device or the output pair at the expansion module
- The signaling contact at the basic unit

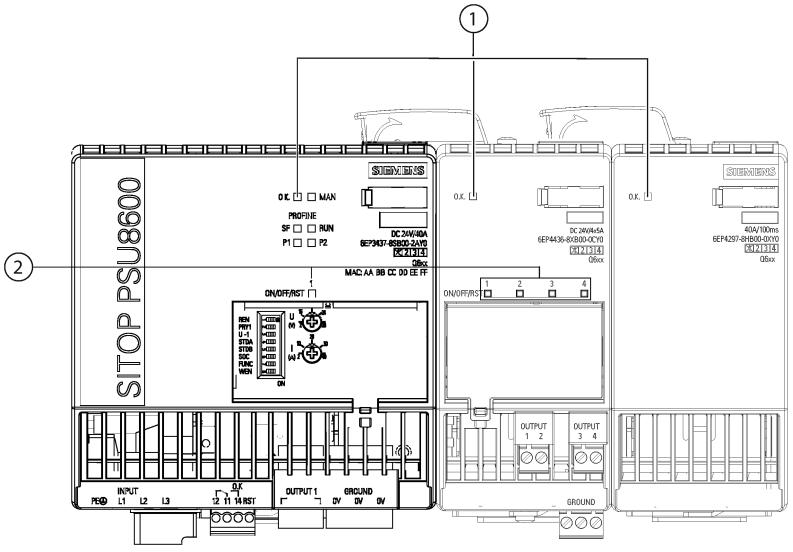

① LED "OK"
② LED "ON/OFF/RST"

Reset of a shutdown due to an inadmissible temperature

Basic unit

You must allow the component involved to cool down before you can reset the shutdown. After the basic unit has cooled down, LED "OK" ① at the basic unit flashes red.

Note

The time that it takes for the component involved to cool down depends on the ambient temperature.

---

1. Switch-off the power supply for the SITOP PSU8600 for at least 10 seconds.
2. Switch on the supply voltage again.

The complete system, including the state of the individual outputs, is brought into the operating state before the temperature shutdown.

Output

The output at the basic device and/or the output pair involved at the expansion module must be allowed to cool down before you can reset the shutdown. After cooling down, LEDs "ON/OFF/RST" ② of the output and/or output pair, flash red.

Note

The time that it takes for the output and/or the output pair involved to cool down depends on the ambient temperature.

1. Press the buttons of the outputs involved.

The temperature shutdown was reset, and the output has been switched-on again.

3.10.2 Phase dissymmetry monitoring

The basic unit has an integrated phase dissymmetry monitoring function. This prevents an inadmissibly high load on the components in the input circuit of the basic unit as a result of dissymmetry of the supply voltage.

Identifying a shutdown due to phase dissymmetry

If the power supply system is operated with an unsymmetrical supply (phase dissymmetry), then this is signaled by a green flashing LED "OK" (1) at the basic unit. If, at rated load, the permissible duration of approx. 10 min. for an unsymmetrical supply is exceeded, all of the outputs of the basic unit and the expansion modules being used are switched off.

Note

The reason for an unsymmetrical supply can be line supply dissymmetry – as well as a complete phase failure. This state is identified and signaled from an output power of approximately 240 W for the 20 A basic device - or approximately 480 W for the 40 A basic device.

When a phase fails, the power supply system can be continually operated up to a maximum output current of 10 A or 20 A without any restrictions.

A shutdown due to phase dissymmetry is signaled by:

- Red LED "OK" ① at the basic unit and at the supplementary modules
- LEDs "ON/OFF/RST" ② of all outputs go dark
- The signaling contact at the basic unit

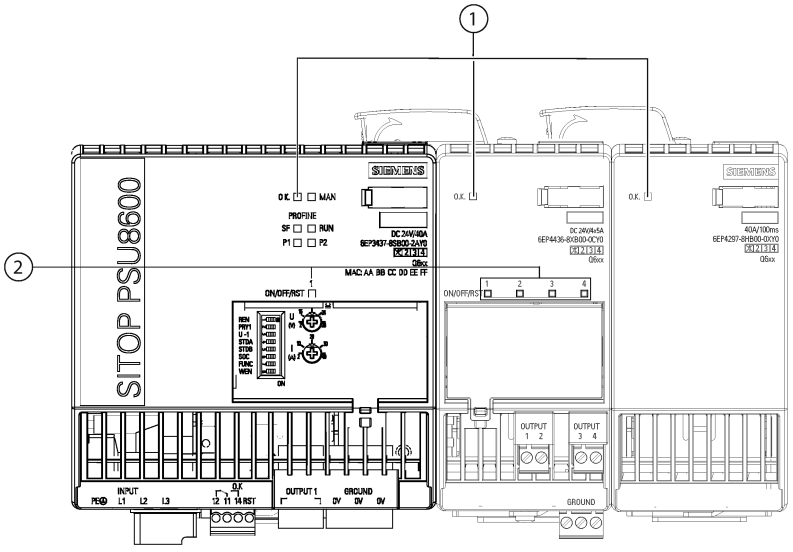

① LED "OK"
② LED "ON/OFF/RST"

Reset of a shutdown due to phase dissymmetry

1. Switch off the supply voltage of the SITOP PSU8600 for at least 10 seconds, and remove the cause of the phase dissymmetry.
2. Switch on the supply voltage again.

The complete system, including the state of the individual outputs, is brought into the operating state before the phase dissymmetry shutdown.

3.10.3 System overload monitoring

In order to permit brief, higher switch-on currents of the loads to be supplied, the system has a dynamic overload capability of 150 % of the rated power for a permissible duration of 5 s/min.

If the system is briefly operated in the range of the dynamic overload capability (101 …150 % of the rated power), LED "OK" ① at the basic unit flashes green.

Note

A shutdown as a result of a system overload can only occur when using expansion modules. When operating the basic device without expansion modules, the dynamic overload capability of the system cannot be exceeded as a result of the coordinated shutdown characteristics of the output at the basic device.

When expanding the system using expansion modules (additional outputs), ensure that the sum of the set response threshold values of the output currents does not exceed the total power rating (current rating) of the system. Alternatively, by suitably configuring the load duty cycle of the individual outputs, you can prevent the total power from being exceeded.

Identifying a shutdown due to system overload

When exceeding the permissible duration of the dynamic overload capability of 5 s/min, the power of the output of the basic device is automatically limited for a duration of 60 s; this means that in the case of an overload, the output current is limited to the maximum rated output current.

The outputs of the expansion modules are simultaneously shutdown.

This operating state is signaled by:

- Green (in buffer operation, yellow) flashing LED "OK" ① at the basic unit
- Red LED "OK" ① of the expansion modules

- Red LEDs "ON/OFF/RST" ② of the outputs of the expansion modules
- The signaling contact at the basic unit

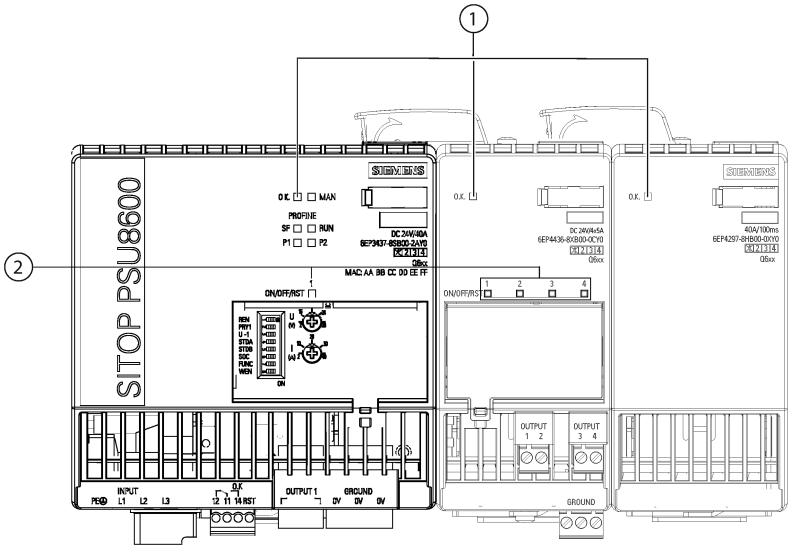

① LED "OK"
② LED "ON/OFF/RST"

Reset of a shutdown due to system overload

After 60 s, the basic unit automatically returns to the normal operating state, the expansion modules return to operational readiness. This state is signaled by:

- Green (in buffer operation, yellow) LED "OK" ① at the basic unit
- Green (in buffer operation, yellow) LED "OK" ① of the expansion modules
- Red flashing LEDs "ON/OFF/RST" ② of the outputs of the expansion modules

Procedure

Press the LED buttons of the outputs at the expansion modules.

The LEDs in the buttons light up green. The outputs are switched-on again. Alternatively, using a remote reset at terminal "RST", all outputs that have been shut down can be simultaneously switched-on again.

3.11 Activating and deactivating buffer operation

Using control contact ON (terminals "X1" and "X2") at BUF8600 buffer modules with double-layer capacitors, buffer operation can be activated, deactivated or exited when the power fails. Preventing or exiting buffer operation is especially interesting for non-operational periods, to prevent buffer components from being unnecessarily discharged. This then facilitates the fastest possible buffer readiness after switching on again.

Buffer operation is only possible if terminals "X1" and "X2" are connected at the buffer module. When delivered, this is implemented using a wire jumper. As a consequence, buffer operation can be enabled, prevented or exited using a floating contact (e.g. a contact in the plant or system). Instead of the wire jumper, the contact is closed, and this must have < 10 Ohm in the closed state. The buffer components are charged irrespective of whether contacts "X1" and "X2" are connected - or not.

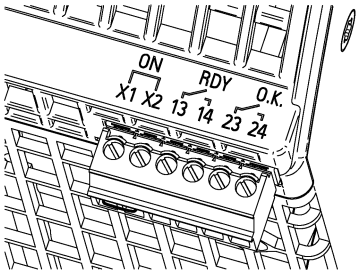

Activating buffer operation

1. Close the connection between terminals "X1" and "X2".

   When the power fails, the power supply system is automatically buffered using the buffer components.

Deactivating buffer operation

1. Open the connection between terminals "X1" and "X2".

   When the power fails, the power supply system is not buffered using the buffer components.

   Buffer operation is immediately exited if the connection between terminals "X1" and "X2" is opened during buffer operation.

Note

Response for two buffer components in the system

If the system has two buffer modules, opening the connection between terminals "X1" and "X2" of **one** buffer module means that also the second buffer module is deactivated. This also applies to buffer modules with electrolytic capacitors, without control contact!

Note

The external circuit must meet the requirements relating to SELV circuits according to EN 60950-1.

Installation and maintenance

4

⚠ WARNING
Use in hazardous zones When the SITOP PSU8600 power supply system is installed in a hazardous zone (Ex II 3G Ex nA nC IIC T4 Gc, Ex II 3G Ex nA IIC T4 Gc, Ex II 3G Ex nA IIC T5 Gc), then it must be accommodated in a distribution box with IP54 degree of protection or higher.

NOTICE
Basic device and expansion modules should be installed in a housing or a control cabinet. The SITOP PSU8600 power supply system is a built-in device. It must be installed in a housing or control cabinet, to which only qualified personnel have access.

4.1 Connecting plug

The basic device and the system components are connected with one another using the connecting plug ① at the upper side of the devices. The procedure to establish a connection is described in Section Rail mounting (Page 82).

Before you remove the basic device or supplementary modules, you must first release the corresponding connecting plugs. The procedure to release a connecting plug is described in Section Removal (Page 85).

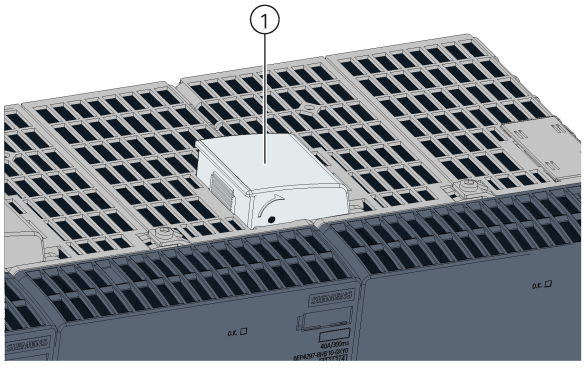

4.2 Rail mounting

Basic unit

⚠ WARNING

Risk of electric shock

Before starting installation work of any kind, the main switch of the system must be opened and measures taken to prevent it from being reclosed. If this instruction is not observed, touching live parts can result in death or serious injury.

When installing in a control cabinet, basic devices can be snapped onto standard mounting rails (see Chapter Mechanical system (Page 230)).

Position the device with the mounting rail guide at the upper edge of the standard mounting rail and press down to lock it into place.

If it is difficult to snap it into place, simultaneously press the slider using a screwdriver.

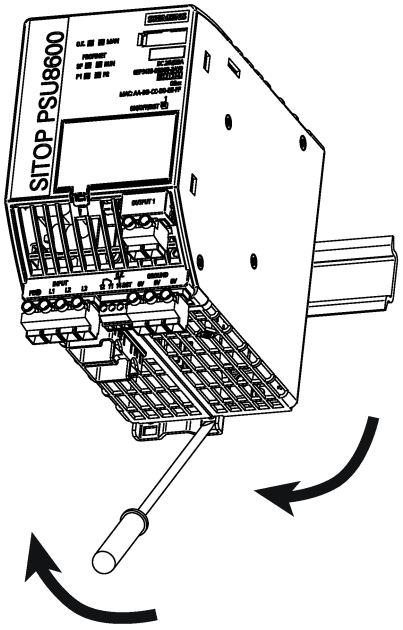

Supplementary modules

⚠ WARNING

Risk of electric shock

Before starting installation work of any kind, the main switch of the system must be opened and measures taken to prevent it from being reclosed. If this instruction is not observed, touching live parts can result in death or serious injury.

The supplementary modules can be mounted in a control cabinet on standard mounting rails according to EN 60715. The electrical connection to the adjacent basic unit or module is established using the connecting plug, integrated at the upper side of the module housing.

1. Position the supplementary module with the mounting rail guide at the upper edge of the standard mounting rail **as close as possible to the** basic unit, and press down to lock it into place.
   If it is difficult to snap it into place, simultaneously press the slider as described for mounting the basic unit.
2. Move the supplementary module so that it is in physical contact with the basic unit.
3. Remove the plastic cover of the connection socket at the basic unit.
4. Connect the supplementary module to the basic unit using the connecting plug:
   – Insert the connecting plug into the socket provided at the basic unit.
   – Ensure that latch ① snaps into place.

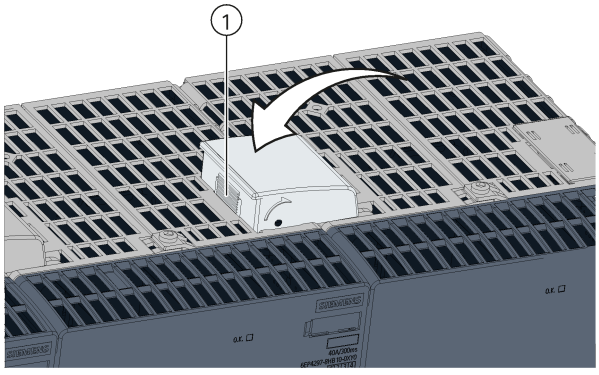

All additional supplementary modules can be connected in the same way to the supplementary module to the left using the connecting plugs.

4.3 Permissible hardware configurations

The various supplementary modules can be arranged in the system as required.

Expansion modules, maximum number and compatibility

A maximum of four expansion modules can be used with a basic device.

Note

Also when using four expansion modules, the maximum power of the system is 480 W or 960 W - and the maximum output current is 20 A or 40 A.

Expansion modules, PSU8600 power supply system	
Type	**Article No.**
SITOP CNX8600 4x 5 A	6EP4436-8XB00-0CY0
SITOP CNX8600 4x 10 A	6EP4437-8XB00-0CY0

Buffer modules, maximum number and compatibility

A maximum of two buffer modules can be used with a basic device.

Note

It is possible to use different buffer modules in one system. This means that a buffer time of 400 ms (100 ms + 300 ms) can be realized, for example.

Buffer modules, PSU8600 power supply system	
Type	**Article No.**
SITOP BUF8600 100 ms/40 A	6EP4297-8HB00-0XY0
SITOP BUF8600 300 ms/40 A	6EP4297-8HB10-0XY0
SITOP BUF8600 4 s/40 A	6EP4293-8HB00-0XY0
SITOP BUF8600 10 s/40 A	6EP4295-8HB00-0XY0

4.4 Removal

⚠ WARNING

Risk of electric shock

Before starting removal work of any kind, the main switch of the system must be opened and measures taken to prevent it from being reclosed. If this instruction is not observed, touching live parts can result in death or serious injury.

NOTICE

Risk of damage by breaking off the connecting plug

The components can only be safely and reliably removed when the connecting plugs have been released. Release the connecting plugs, before removing or replacing the basic unit and supplementary modules.

1. Switch the basic unit into a no-voltage condition.
2. Release all of the connections at the plug-in terminals, and if necessary, the PROFINET connection.
3. Release all of the connecting plugs at the basic unit and the supplementary modules being used.
   To do this, press latch ① and withdraw the connecting plug.

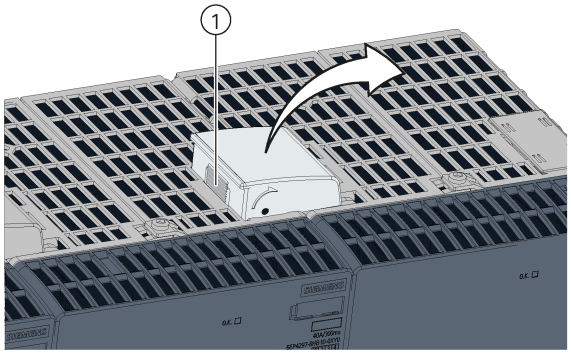

4. Lift the slider using a screwdriver.

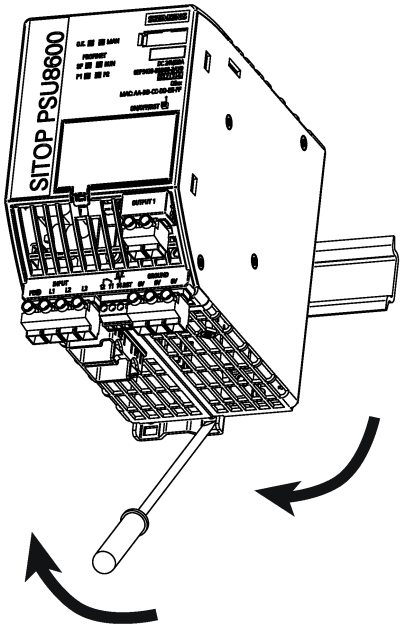

5. Detach the basic unit from the lower edge of the standard mounting rail.
6. Remove the basic unit from the lower edge of the standard mounting rail.
7. If required, repeat steps 4 to 6 for each supplementary module.

4.5 Replacing individual components

It is only permissible to replace individual components when they are in the no-voltage state.

⚠ WARNING

Risk of electric shock

Before starting removal work of any kind, the main switch of the system must be opened and measures taken to prevent it from being reclosed. If this instruction is not observed, touching live parts can result in death or serious injury.

NOTICE

Risk of damage by breaking off the connecting plug

The components can only be safely and reliably removed when the connecting plugs have been released. Release the connecting plugs, before removing or replacing the basic unit and supplementary modules.

NOTICE

Risk of damage as a result of jamming when withdrawing

Withdrawing individual components without taking the appropriate care can damage adjacent components. Withdraw components carefully, without applying excessive force.

Replacing an expansion module ② is shown as example. The procedure is similar for all components.

Removing installed components

1. Switch the basic unit into a no-voltage condition.

   Note

   For a hardware configuration with one or several buffer modules, after the basic unit has been switched into a no voltage condition, the energy stored in the buffer components must first decay. This can take several minutes under no load conditions (all of the outputs are shutdown). Only start the subsequent steps as soon as all of the system LEDs have gone dark.

2. Release the connections at the plug-terminals of the component to be replaced.

   If the basic unit is replaced: When necessary, also release the PROFINET connection.

3. Release the connecting plug ① at the component to be replaced.

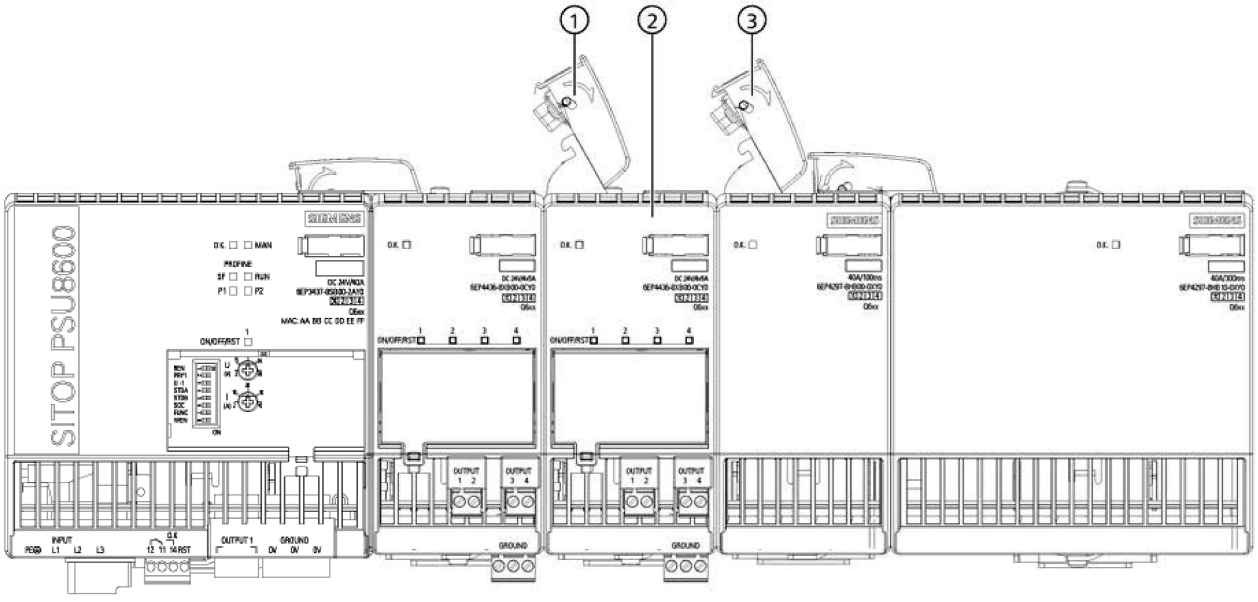

4. Release the connecting plug ③ at the component to the right (if this is available).
5. Pull-up the slider ④ using a screwdriver ⑤.

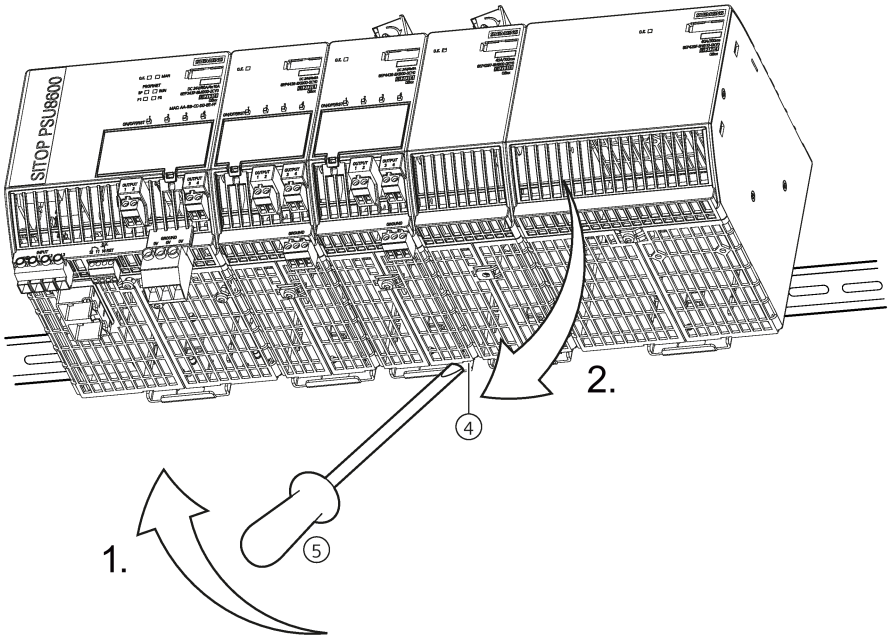

6. Detach the component to be released from the lower edge of the standard mounting rail. When doing this, ensure that both connecting plugs are completely opened and in the vertical position in order to release the interlocking between the modules.
7. Withdraw the component to be released from the upper edge of the standard mounting rail.

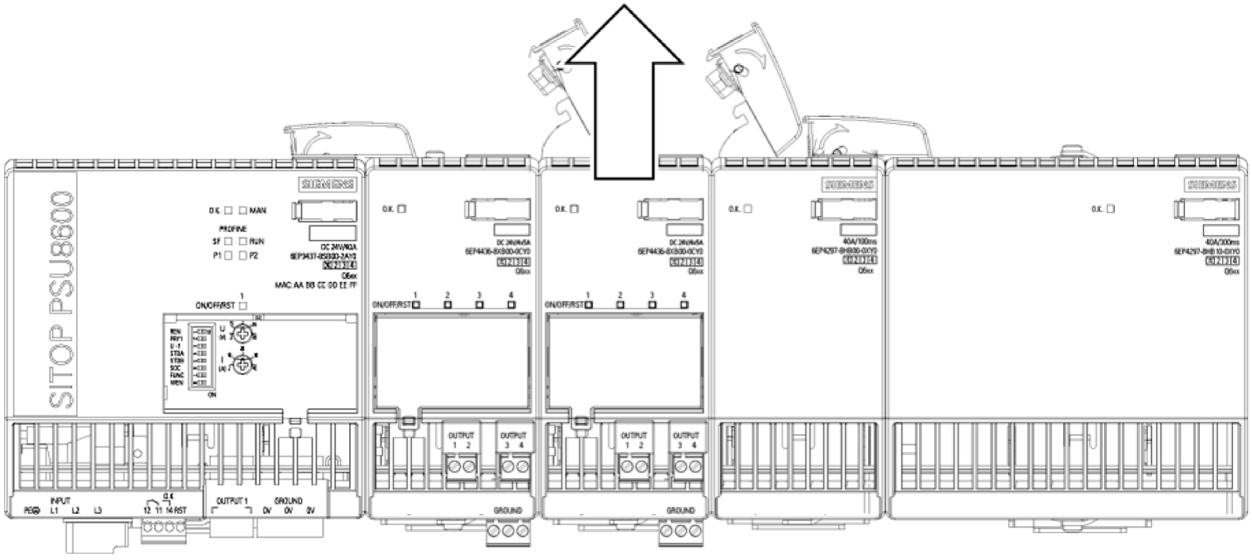

Installing a new component

1. Position the new component with the mounting rail guide at the upper edge of the standard mounting rail and press down to lock it into place.
   If it is difficult to snap it into place, simultaneously press the slider as described for rail mounting.
2. Remove the plastic cover of the connecting socket (if there is an additional module at the right-hand side) and connect the new component to the adjacent components using the connecting plug.

3. Connect all of the plug-in terminals at the new component and carefully check that the wiring is correct. If the basic unit was replaced, then also connect the PROFINET connection.

NOTICE
Incorrect response and damage after switching on again
When replacing an individual component it must be ensured that the new component used is the identical type to the one that you have removed and has the same settings. This is to avoid any possible incorrect response and damage after you switch on again. After replacing the component, also ensure that the wiring of the plug-in terminals is correct.

Note

In the REMOTE operating mode, after replacing an individual component, it is not absolutely necessary that the new component has to be reparameterized. If an identical component was used as replacement, the assigned control system identifies this and automatically parameterizes the new component with the settings of the predecessor component.

However, we recommend that the manual settings are aligned with those of the component that has been replaced.

4. Connect power to the basic unit.

   The new component of the identical type is activated. When replacing an expansion module, the outputs of the replaced module go into the "manually shutdown" operating state (LED is lit yellow). When replacing the basic unit, all outputs of the power supply system go into the "manually shutdown" operating state.

5. Check all of the settings at the components to ensure that the correct values are set.
6. Commission the outputs by pressing on the relevant button.

You have successfully replaced the individual component.

4.6 System response for a modified hardware configuration

The system response of the SITOP PSU8600 after modifying the system configuration is explained in this section.

Modifying the system configuration involves changing, adding or removing individual components.

⚠ WARNING

Risk of electric shock

Before starting to make changes of any kind to the system configuration, the main switch of the system must be opened and measures taken to prevent it from being reclosed. If this instruction is not observed, touching live parts can result in death or serious injury.

NOTICE

Damage caused by incorrect wiring

SITOP PSU8600 does not check that the wiring is correct.

After making any changes to the system configuration, ensure that the wiring is correct in order to avoid damage to the system.

Comparison of the system configuration by SITOP PSU8600

When the system starts or a configuration is loaded, the system compares the saved system data with the actual system configuration:

- Article numbers of the individual components installed
- Serial numbers of the installed individual components
- Positions of the individual components in the system configuration
- Firmware versions of the installed individual components

MANUAL operating mode

In the MANUAL operating mode, when the system starts, SITOP PSU8600 compares the existing system configuration with the system configuration that existed at the last complete system start.

For an unchanged system configuration, all outputs are activated with the last operating status before the shutdown.

REMOTE operating mode

In the REMOTE operating mode, when the system starts, SITOP PSU8600 compares the existing system configuration with the last hardware configuration loaded from a control system in the REMOTE operating mode.

For an unchanged system configuration, all outputs are activated with the parameters and operating states saved in the configuration. If, before the shutdown, the last operating state of an output was "Manually switched off (LED is lit yellow), "Automatically switch off due to

overload" (LED is lit red) or "Ready for reset" (LED flashes red), then these operating states are again assumed when the system starts.

4.6.1 Response after changing an individual component

A change involves replacing an individual component by an individual component with a different order number (not the identical type).

NOTICE
Incorrect response and damage after switching on again Different settings and an incorrectly wired new component can result in an incorrect response and subsequent damage. When replacing an individual component, it must be ensured that the new component has the same settings as the component that has been replaced in order to avoid an incorrect response and damage after you switch-on again. After replacing the component, ensure that the wiring via the plug-in terminals is correct.

Note

For replacing components by an identical component type, proceed as described under Replacing individual components (Page 87).

Response after making a change and powering up in the MANUAL mode

- Buffer modules are automatically commissioned.
- For expansion modules, after switching on again, the outputs are in the operating state "manually shutdown" (the LEDs of the outputs are lit yellow).
  The outputs are switched-on by pressing their associated buttons.

Response after making a change and powering up in the REMOTE mode

In this case, the system response depends on the specific case.

Case 1

Replacement using a module with the same function (a buffer module by buffer module, expansion module by expansion module):

- A compatibility check is carried out for buffer modules:
  - If a buffer module with electrolytic capacitors is replaced by a buffer module with electrolytic capacitors, then the new module is automatically commissioned.
  - If a buffer module with double-layer capacitors is replaced by a buffer module with double-layer capacitors, then a more powerful module is automatically commissioned. A module with a lower power rating is deactivated (LED "OK" flashes red). You can activate this module by loading a corrected configuration via the associated control system.
  - If a buffer module with electrolytic capacitors is replaced by a buffer module with double-layer capacitors - or vice versa - then the new module is automatically deactivated ("OK" LED flashes red). You can activate this module by loading a corrected configuration via the associated control system.
- For expansion modules, a compatibility check is carried out:
  - For expansion modules with a higher power rating, after switching on again, the outputs are in the operating state "manually shutdown" (the LEDs of the outputs are lit yellow).
    The outputs are switched-on by pressing their associated buttons.
  - Expansion modules with a lower power rating are deactivated (LED "OK" flashes red, LEDs of the outputs are dark).
    You can activate these modules by loading a corrected configuration via the associated control system.

Case 2

Replacement using a module with a different function (a buffer module by an expansion module, or vice versa):

- The new module is deactivated (LED "OK" flashes red, LEDs of the expansion module outputs are dark).
  You can activate the module by loading a correct configuration via the associated control system.

See also

Replacing individual components (Page 87)

4.6.2 Response after adding an individual component

Adding involves expanding the system on the right-hand side by adding additional components.

Note

When changing the module sequence, by checking the module position it is possible that previously used modules are undesirably deactivated – and outputs that have been used up until now are shutdown.

To avoid undesirably deactivating modules that have been used up until now – and shutting down outputs that have been used up until now, insert the new individual components at the right-hand side of the system. As a consequence, the previous module sequence in the system configuration is not changed.

Response after adding a component and powering up in the MANUAL operating mode

- New buffer modules are automatically commissioned.
- For new expansion modules, after switching on again, the outputs are in the operating state "manually shut down" (the LEDs of the outputs are lit yellow).
  The outputs are switched-on by pressing their associated buttons.

Response after adding a component and powering up in the REMOTE operating mode

- The new module is deactivated (LED "OK" flashes red, LEDs of the expansion module outputs are dark).
  You can activate the module by loading a correct configuration via the associated control system.

4.6.3 Response after removing an individual component

NOTICE

Incorrect response and damage after switching on again

Different settings and incorrect wiring, that can be caused by changes made to the system configuration, can result in an incorrect response and subsequent damage.

After making any change to the system configuration, ensure the correct settings of the remaining components as well as the correctness of the associated wiring to avoid any incorrect response and damage after switching on again.

Note

By removing modules, it is possible that the previous module position of the remaining modules is changed. This can result in modules, whose position has changed, being deactivated and outputs shutdown.

Response after removing a component and powering up in the MANUAL mode

- Buffer modules are automatically commissioned.
- Expansion modules with an unchanged module position are activated with the last operating state of the outputs before shutdown.
- For expansion modules with changed module position, after switching on again, the outputs are in the operating state "manually shutdown" (the LEDs of the outputs are lit yellow).
  The outputs are switched-on by pressing their associated buttons.

Response after removing a component and powering up in the REMOTE mode

- Buffer modules with unchanged module position are automatically commissioned.
- Expansion modules with an unchanged module position are activated with the last operating state of the outputs before shutdown.
- For modules with changed module position, the system response depends on the specific case.

Case 1

The function of the module is identical with the function of the previous module at the installation location (buffer module at the installation location of a buffer module, expansion module at the installation location of an expansion module).

- A compatibility check is carried out for buffer modules:
  - If a buffer module with electrolytic capacitors is replaced by a buffer module with electrolytic capacitors, then the new module is automatically commissioned.
  - If a buffer module with double-layer capacitors is replaced by a buffer module with double-layer capacitors, then a more powerful module is automatically commissioned. A module with a lower power rating is deactivated (LED "OK" flashes red). You can activate this module by loading a corrected configuration via the associated control system.
  - If a buffer module with electrolytic capacitors is replaced by a buffer module with double-layer capacitors - or vice versa - then the new module is automatically deactivated ("OK" LED flashes red). You can activate this module by loading a corrected configuration via the associated control system.
- For expansion modules, a compatibility check is carried out:
  - For identical expansion modules with a higher power rating, after switching on again, the outputs are in the operating state "manually shutdown" (the LEDs of the outputs are lit yellow).
    The outputs are switched-on by pressing their associated buttons.
  - Expansion modules with a lower power rating are deactivated (LED "OK" flashes red, LEDs of the outputs are dark).
    You can activate these modules by loading a corrected configuration via the associated control system.

Case 2

The function of the module is not identical with the function of the previous module at the installation location (buffer module at the installation location of an expansion module – or vice versa).

- The module is deactivated (LED "OK" flashes red, LEDs of the expansion module outputs are dark).
  You can activate the module by loading a correct configuration via the associated control system.

Mounting position, mounting clearances

5

5.1 Standard mounting position

The device is mounted on standard mounting rails according to EN 60715. The power supply system must be mounted in such a way that the input terminals and the output terminals are at the bottom to ensure correct cooling.

A clearance of at least 50 mm should be maintained above and below the power supply system (maximum depth of the cable duct, 50 mm).

No clearance is required at the side.

Output current as a function of the ambient temperature

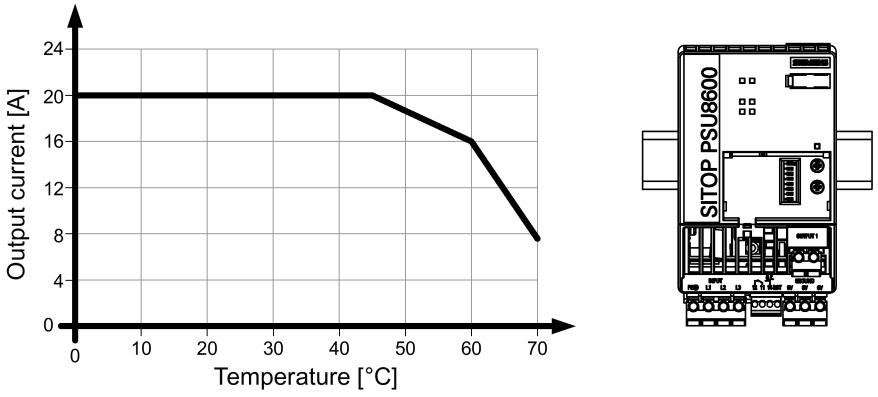

Image 5-1 Basic device SITOP PSU8600 20 A: Output current in the standard mounting position

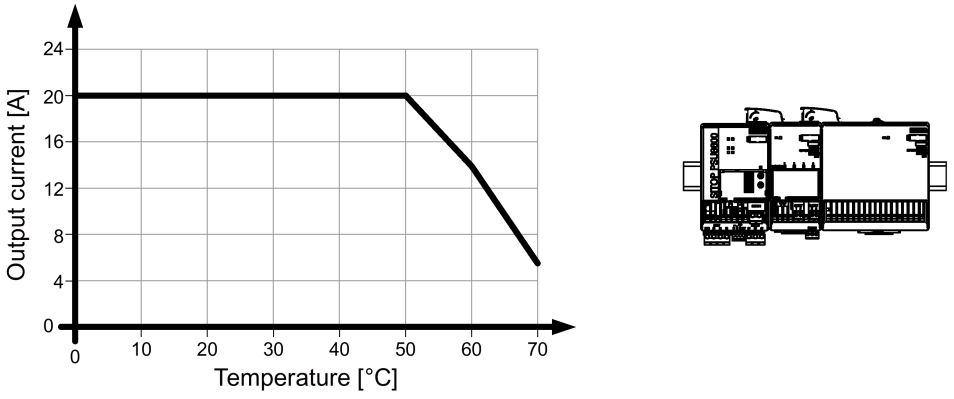

Image 5-2 Basic device SITOP PSU8600 20 A and supplementary modules: Output current in the standard mounting position

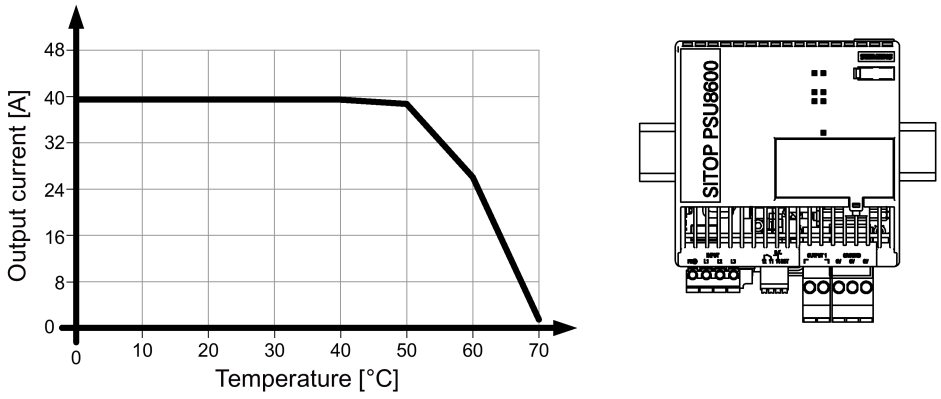

Image 5-3 Basic device SITOP PSU8600 40 A: Output current in the standard mounting position

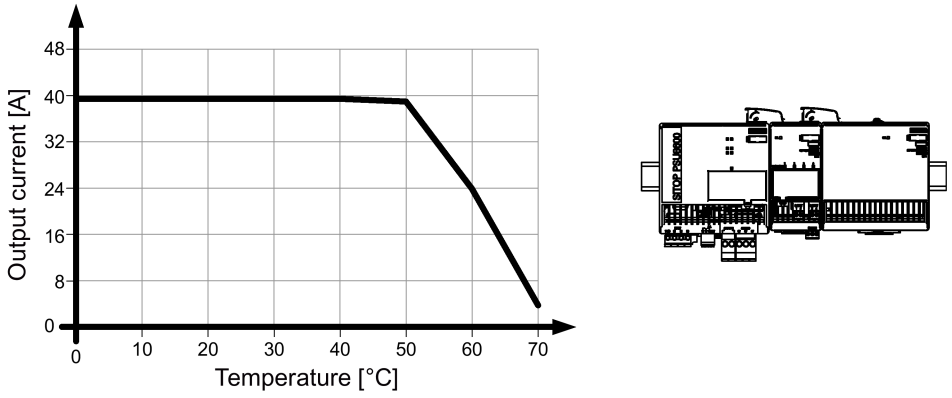

Image 5-4 Basic device SITOP PSU8600 40 A and supplementary modules: Output current in the standard mounting position

Output current as a function of the altitude derating

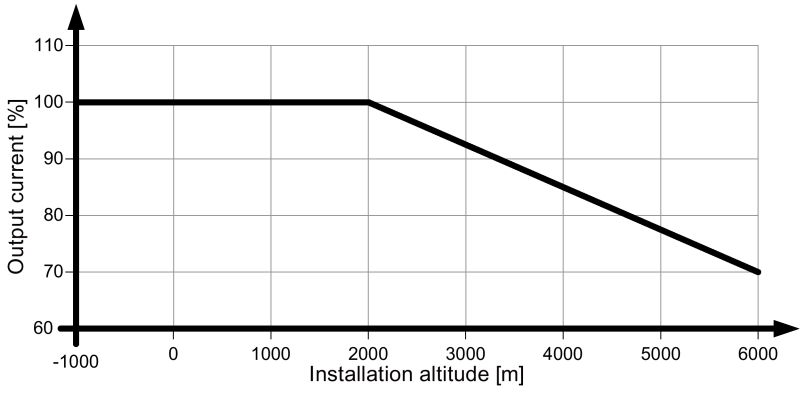

Image 5-5 Mounting height derating

5.2 Other mounting positions

For mounting positions that deviate from the standard mounting position, derating factors (reduction of the output power or the permissible ambient temperature) must be observed in accordance with the following diagrams.

Note

In the case of mounting positions that deviate from the standard mounting position, reduced mechanical resistance of the devices against vibration and shock must be expected.

Particularly when installing on a vertically fastened standard mounting rail, additional measures may be required, e.g. to prevent the device from slipping on the standard mounting rail.

5.2.1 Basic device SITOP PSU8600 20 A

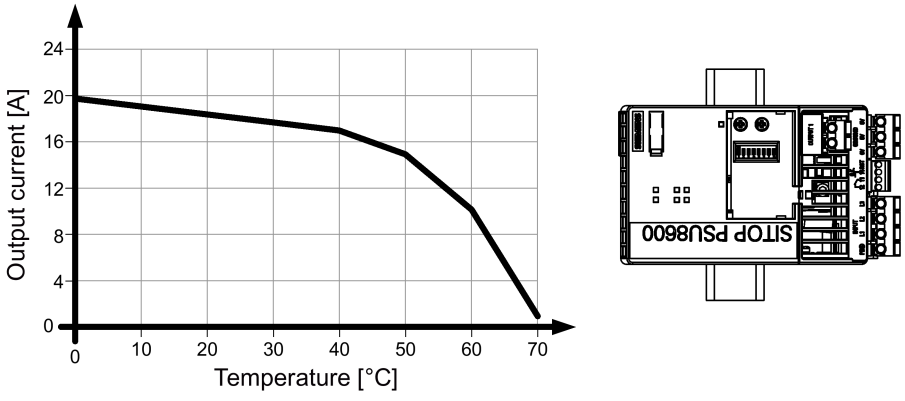

Image 5-6 Mounting position 1

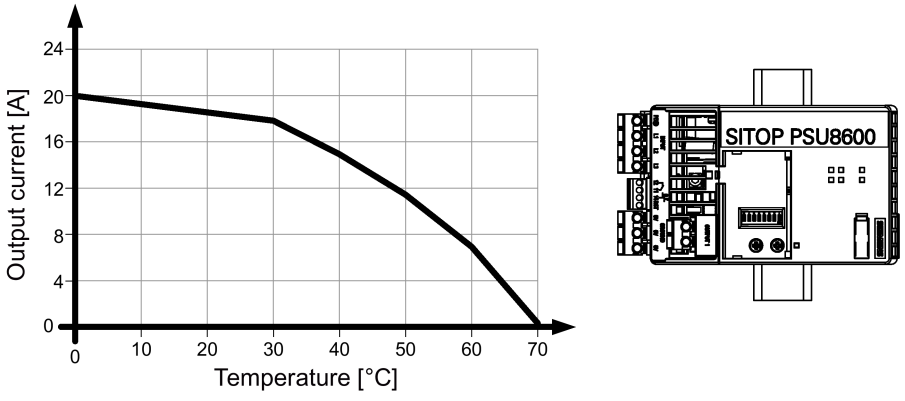

Image 5-7 Mounting position 2

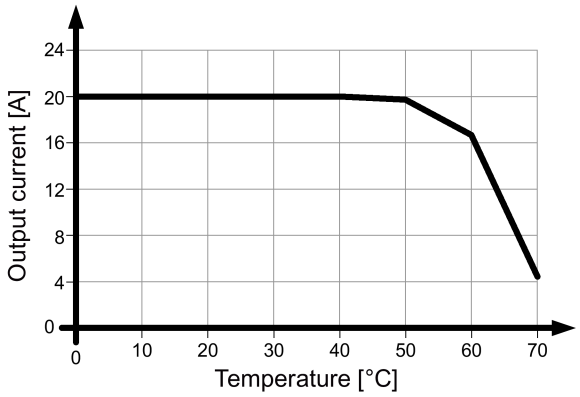

Image 5-8 Mounting position 3

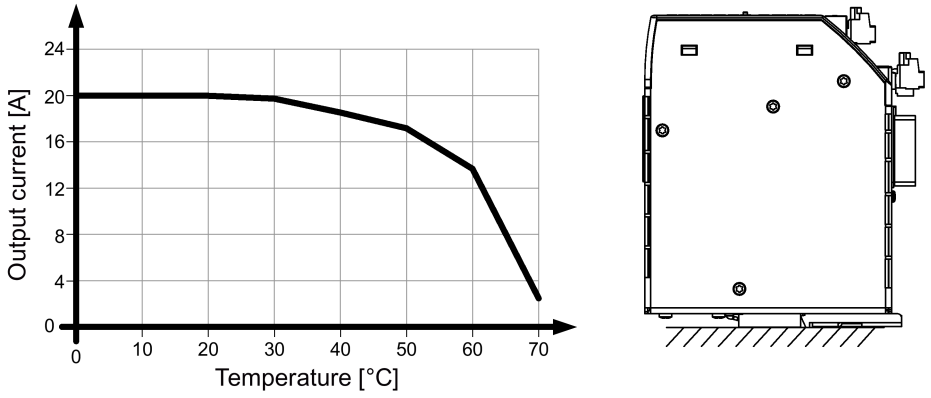

Image 5-9 Mounting position 4

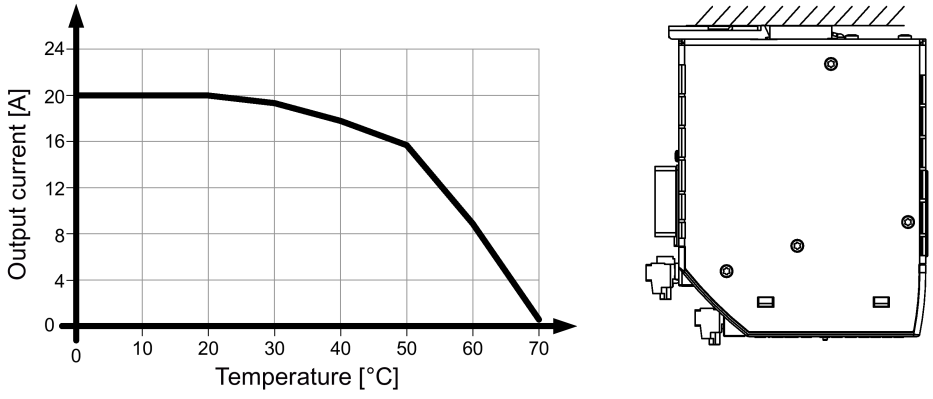

Image 5-10 Mounting position 5

5.2.2 Basic device SITOP PSU8600 20 A and supplementary modules

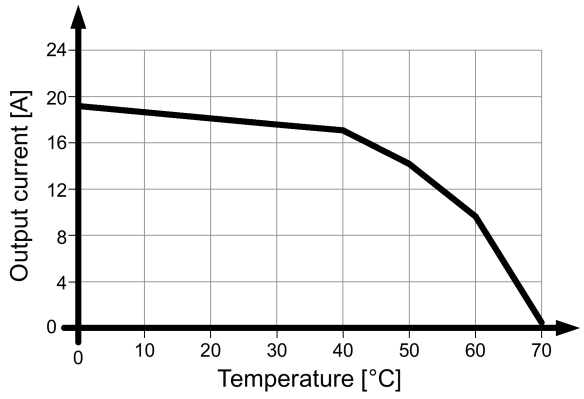

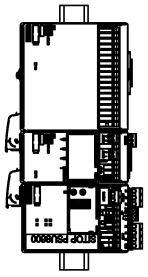

Image 5-11 Mounting position 1

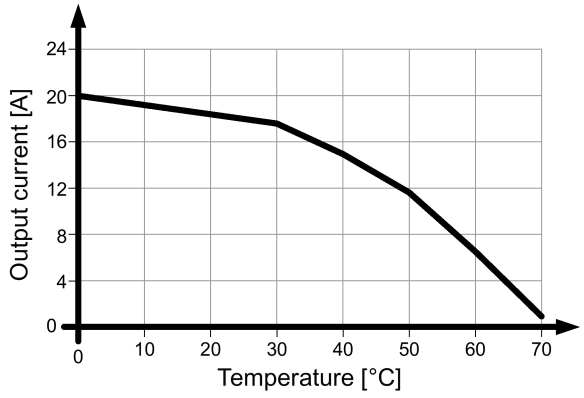

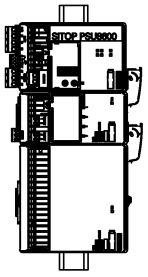

Image 5-12 Mounting position 2

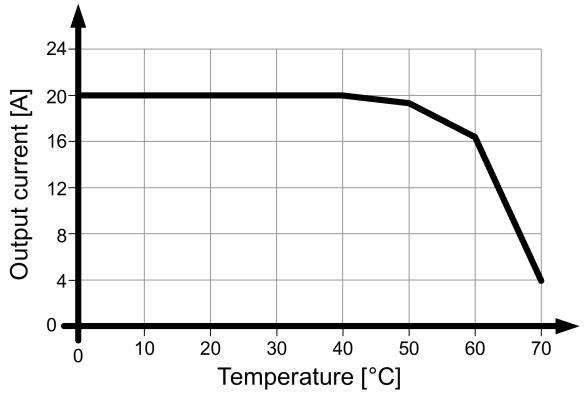

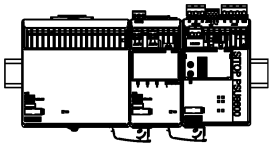

Image 5-13 Mounting position 3

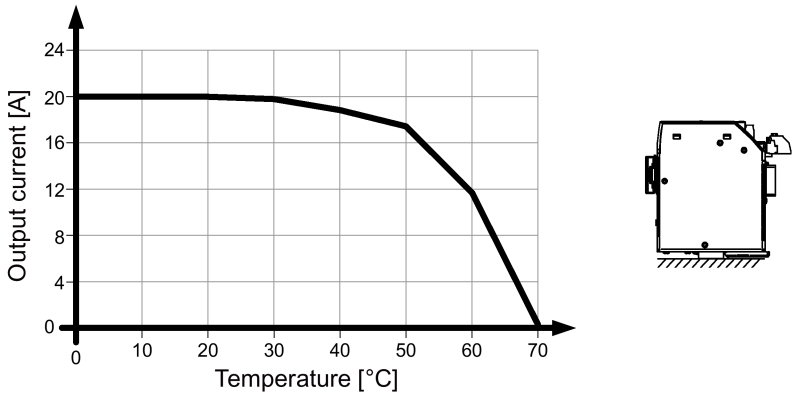

Image 5-14 Mounting position 4

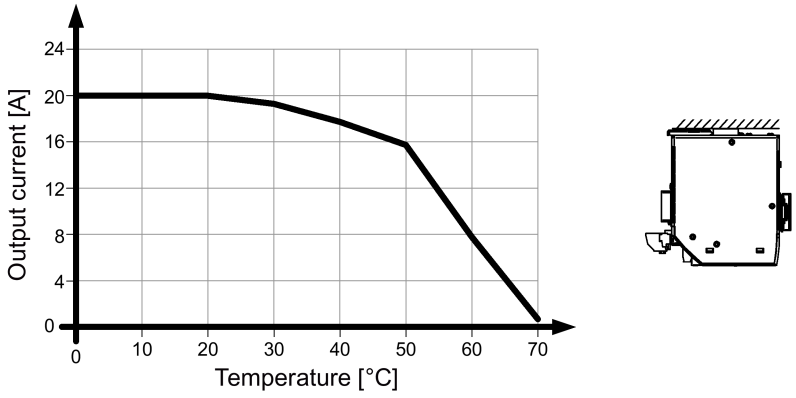

Image 5-15 Mounting position 5

5.2.3 Basic device SITOP PSU8600 40 A

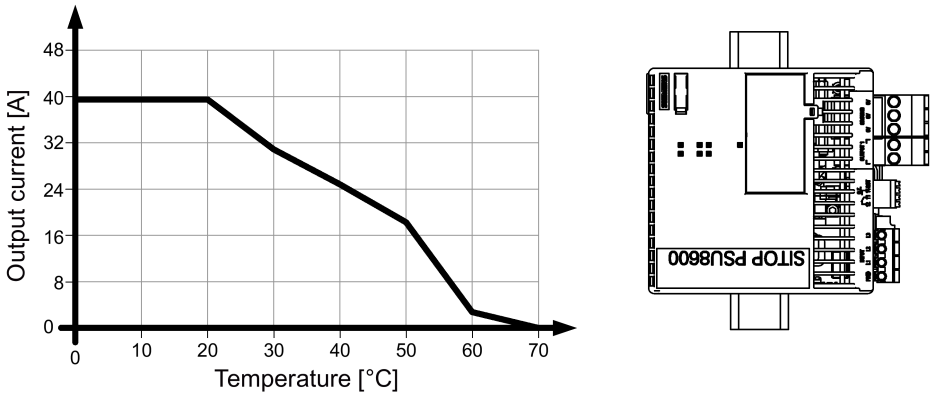

Image 5-16 Mounting position 1

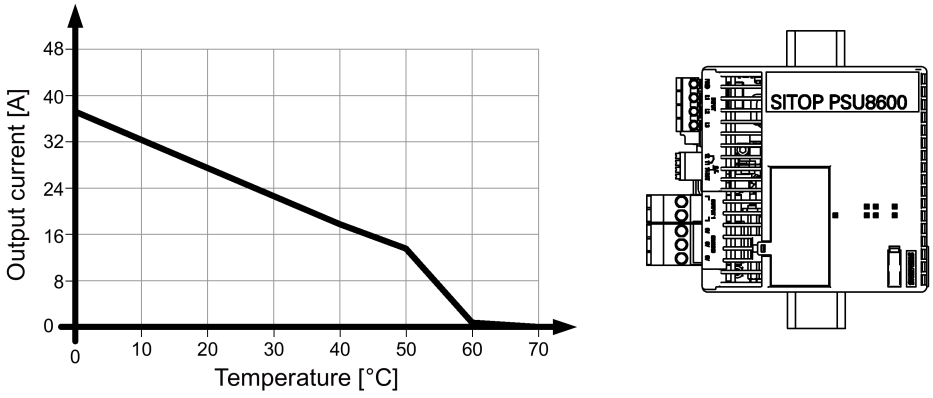

Image 5-17 Mounting position 2

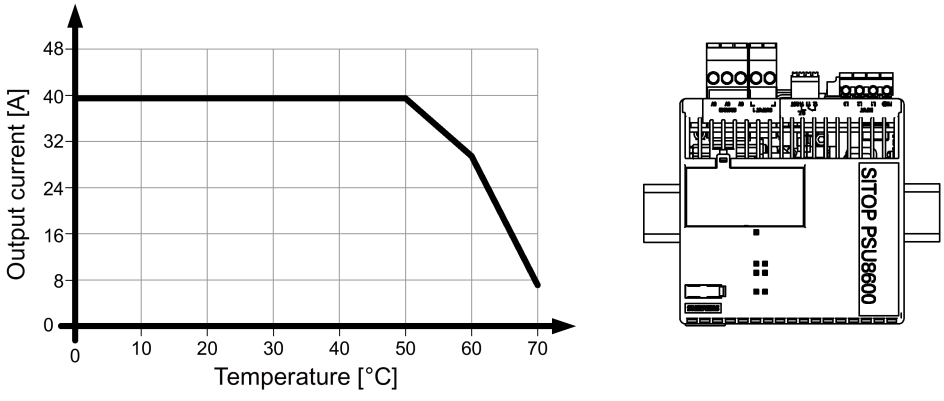

Image 5-18 Mounting position 3

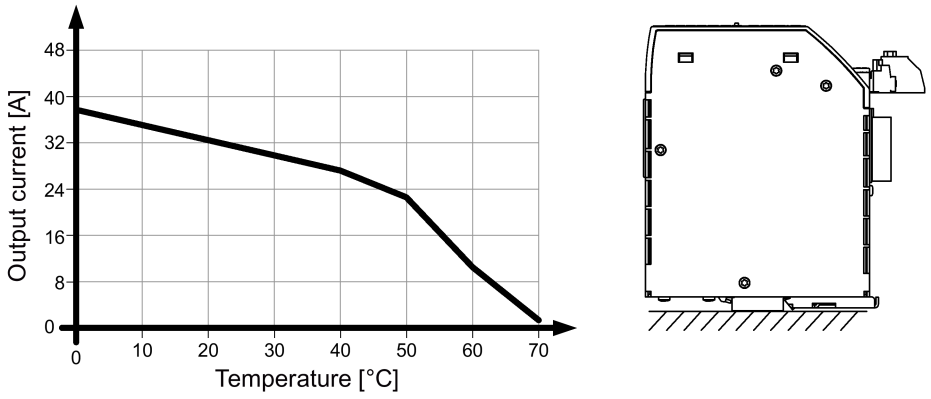

Image 5-19 Mounting position 4

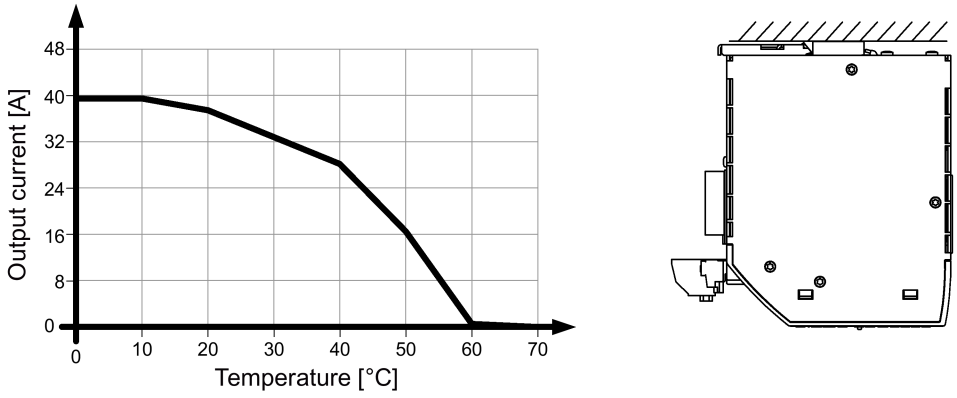

Image 5-20 Mounting position 5

5.2.4 Basic device SITOP PSU8600 40 A and supplementary modules:

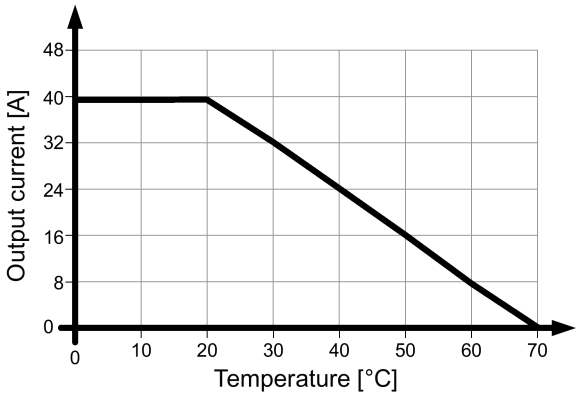

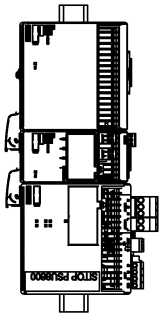

Image 5-21 Mounting position 1

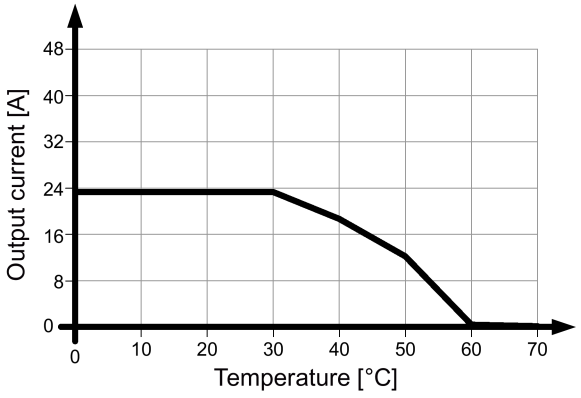

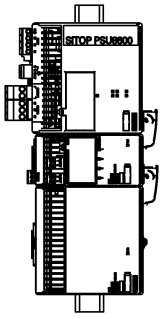

Image 5-22 Mounting position 2

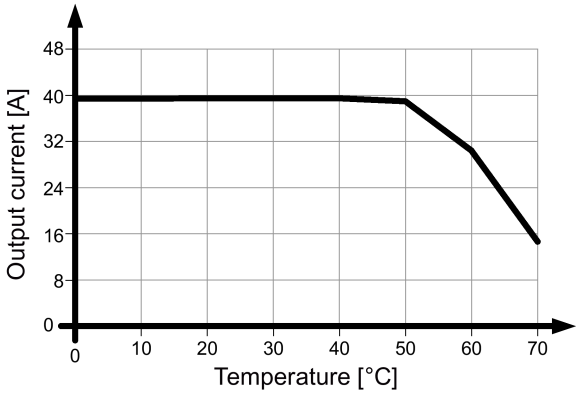

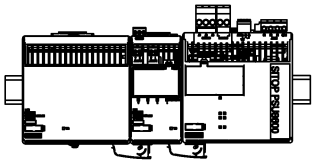

Image 5-23 Mounting position 3

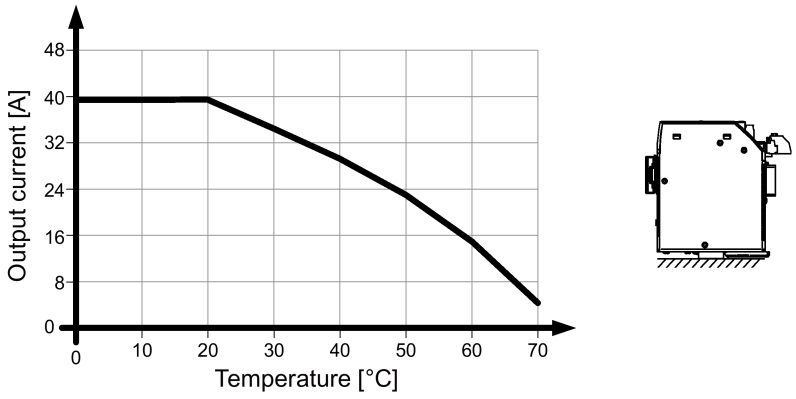

Image 5-24 Mounting position 4

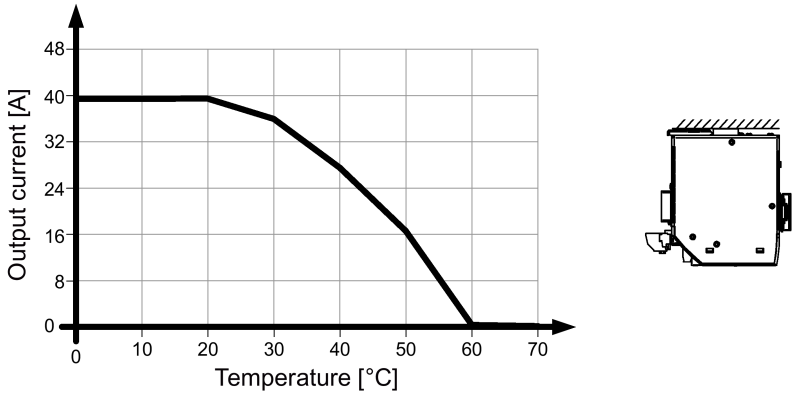

Image 5-25 Mounting position 5

Installation

6

WARNING
Hazard due to electric shock Before installation or maintenance work can begin, the system's main switch must be switched off and measures taken to prevent it being switched on again. If this instruction is not observed, touching live parts can result in death or serious injury.

6.1 Line-side connection

The SITOP PSU8600 power supply system is designed for connection to a 3-phase line supply (TN or TT line system according to VDE 0100 T 300 / IEC 364-3) with a rated voltage of 3 AC 400-500 V, 50/60 Hz or an IT line system with a rated voltage of 3 AC 400-500 V, 50/60 Hz.

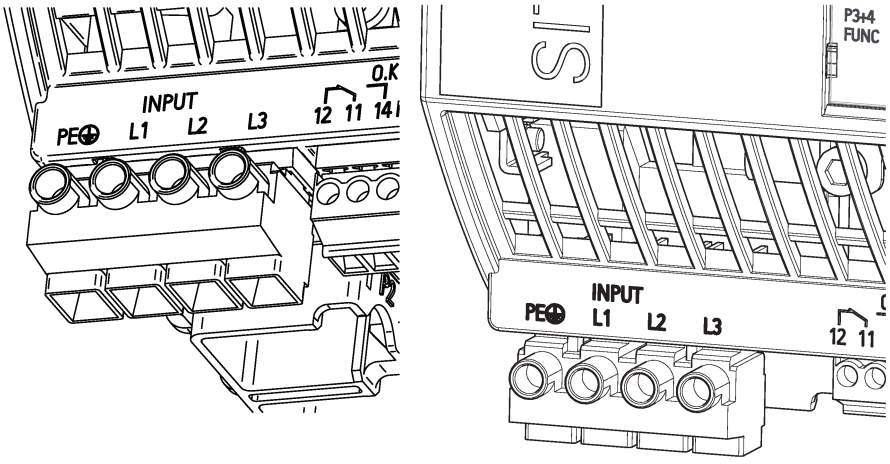

The line supply is connected using terminals "L1", "L2", "L3" and "PE" of the basic unit, and must be implemented according to IEC 60364 and EN 50178. A protective device (miniature circuit breaker or circuit breaker) and a disconnection unit for the power supply must be provided. A ground-fault circuit interrupter is not permissible against indirect contact as the only protective measure. This applies for the complete line supply protected by the ground-fault circuit interrupter.

Protection

Protection for 6EP3436-8SB00-2AY0	
Protection required	• 3-pole, coupled miniature circuit-breaker (IEC 898) characteristic C, 6-16 A or • 3RV2011-1DA10 miniature circuit breaker, setting of the thermal overcurrent release: 3 A or • 3RV2711-1DD10 miniature circuit breaker (branch circuit protection acc. to UL 489)

Protection for 6EP3437-8SB00-2AY0	
Protection required	• 3-pole, coupled miniature circuit-breaker (IEC 898) characteristic C, 10-16 A or • 3RV2011-1DA10 circuit breaker, setting of the thermal overcurrent release: 3 A or • 3RV2711-1DD10 circuit breaker (branch circuit protection acc. to UL 489)

The protective conductor of the line supply must be connected at the "PE" terminal.

Other country-specific regulations may have to be observed when installing the device.

Also observe the information in Section Connections and terminal designations (Page 21).

6.2 Connection on the output side

The SITOP PSU8600 power supply system provides a floating (= ungrounded) SELV output voltage (Safety Extra Low Voltage) with common ground at the outputs. The system outputs are no-load, overload and short-circuit proof. If an overload occurs, the electronic current limiting function limits the current of each output to a maximum value. The output is electronically shutdown after a specified characteristic has been exceeded (see Chapter Technical data (Page 219)).

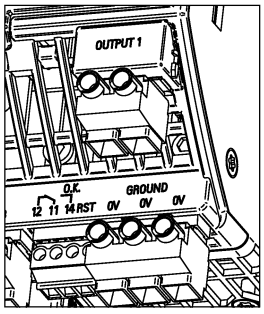

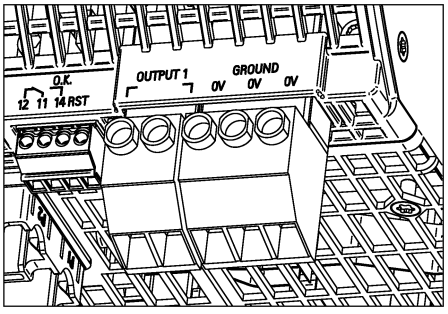

The load circuits to be supplied are connected using the "OUTPUT" terminals 1 of the basic device and possibly the expansion modules. Ensure that the output cables are dimensioned correctly for the maximum output current and are appropriately protected/fused.

The 0 V potential of all load circuits should be fed back from a common collection point of the system (for example, the 0 V rail) to terminal "0V" of the basic device. Ensure that the cable between the system collection point and the "0V" terminal is dimensioned to be able to conduct the total current.

NOTICE

Overload of the wiring

When using expansion modules, it is not permissible that terminal "GND" at the expansion module is used for the 0 V potential of the loads to be supplied. All 0 V potentials must be jointly routed to terminal "0V" of the basic device to avoid overloading the wiring.

Terminal "GND" at the expansion modules is only used to connect the ground for larger system configurations (see Section Establishing an additional ground connection (Page 113)).

Note

If the safety concept of the system specifies that the DC output circuit should be grounded (PELV), then the output voltage of the SITOP PSU8600 power supply system may be grounded.

Ideally, the grounding at the output should be directly connected from terminal "0V" of the basic unit to a suitable connection point of the protective conductor system (PE) of the overall plant or system.

Also observe the information in Section Connections and terminal designations (Page 21).

6.3 Connecting the signaling contact/reset terminal

The combined signaling contact/reset terminal has two functions:

- Information regarding the operating states can be called up using signaling contacts "12", "11" and "14".
- A remote reset can be implemented using input "RST.

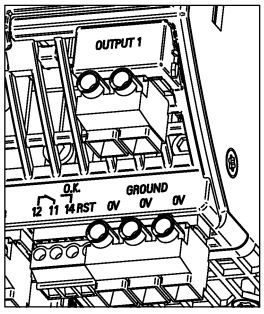

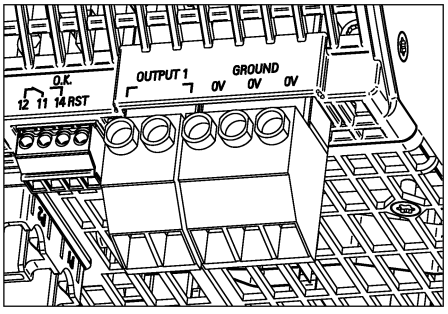

Signaling contact (changeover contact)

The signaling contact is implemented as changeover contact (NC contact: terminals "11" and "12", NO contact: terminals "11" and "14"), and allows information about the operating states of the power supply system and the outputs to be processed.

Contact rating:
60 V DC/0.3 A

The precise function of the signaling contact is described under Basic devices (Page 38).

You can obtain more information about the assignment of the signaling contact under Connections and terminal designations (Page 21)

Reset terminal

A reset can be alternatively carried out using a remote reset signal. The non-isolated 24 V input (referred to terminal "0V" of the device) at terminal "RST" can be used for this purpose. A reset is carried out for an input level of > 15 V for at least 100 ms.

Note

Using a remote reset signal at terminal "RST", all outputs of the power supply system that were shut down electronically due to an overload are reset at this time, assuming that the wait time of 5 seconds of the corresponding output has elapsed.

Note

The rising edge of the reset signal is evaluated; this means for an additional reset signal, the voltage level must first drop down to below 13 V.

You can obtain more information about the overload shutdown and reset under Overload shutdown and carrying out a reset (Page 56)

See also

Connections and terminal designations (Page 21)
Basic devices (Page 38)

6.4 Establishing a PROFINET connection

The basic device has an Ethernet/PROFINET 2-port switch for data exchange in the remote mode. Seen from the front of the device, the port facing towards the rear is port 1, the port facing towards the front, is port 2.

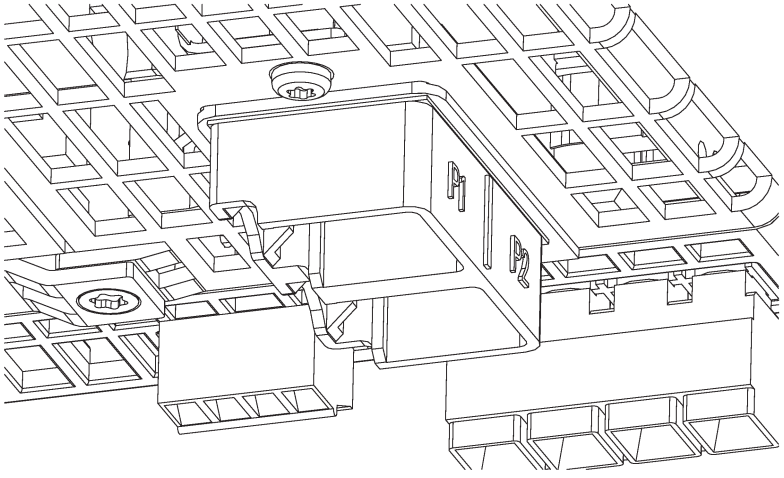

The Ethernet/PROFINET interface facilitates:

- Configuring and monitoring in the REMOTE mode
- Integration and communication of the SITOP PSU8600 with other open automation components in the Siemens and open environment, for instance IPC, PLC, HMI
- Firmware update of the device via STEP 7 or web server

⚠ WARNING

Risk of explosion

For use in a hazardous zone, an Ethernet/PROFINET connector with strain relief must be used.

Strain relief for use in a hazardous zone is implemented by using a Siemens IE FastConnect RJ45.

The connection to the PROFINET network is realized using signal cables, connected to the Ethernet/PROFINET interface at the lower side of the device.

6.5 Establishing an additional ground connection

The power supply system fulfills the requirements relating to electromagnetic compatibility (noise emission, noise immunity) as described under Safety, approvals, EMC (Page 235). This also applies to the optional expansion modules.

For larger system configurations, i.e. involving a basic device and several expansion modules, it may make sense, depending on the actual application, to establish an additional ground connection between the basic device and expansion modules to increase the noise immunity and to reduce noise emission.

Route the additional ground connection from terminal "0V" of the basic unit to terminal "GND" of the first expansion module, and from there, to additional expansion modules by looping through the cable as shown in the diagram below.

The possible wire/conductor cross-section for the additional ground connection is max. 2.5 mm².

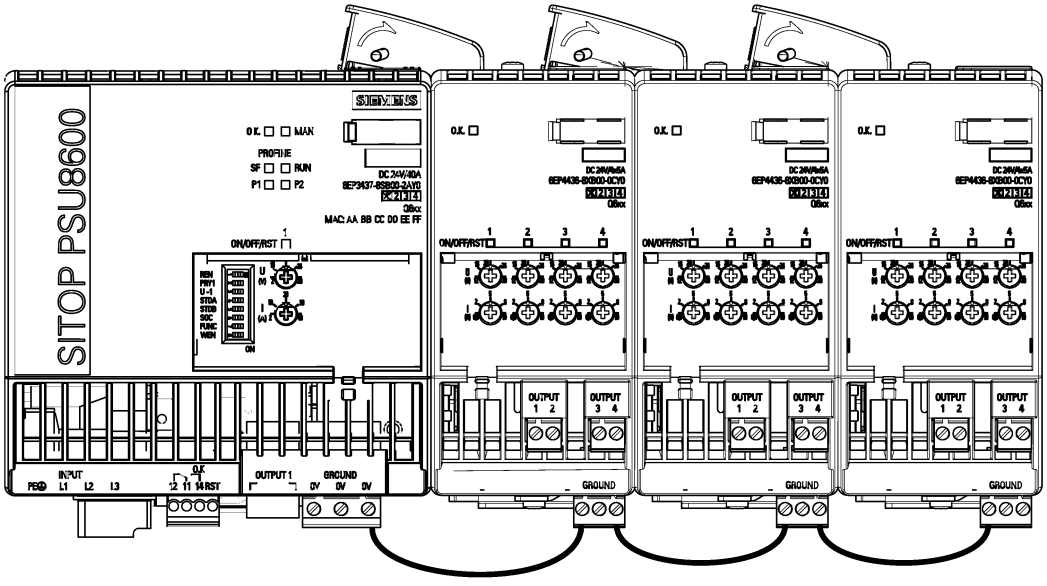

NOTICE
Overload of the wiring It is not permissible to use the "GND" terminals of the expansion modules for the connection to the common collection point of the 0 V potential of the loads to be supplied (for example 0 V- bus of the system). Only establish the connection between the power supply system and the common collection point of the 0 V potential via terminal "0V" of the basic device.

See also Connections and terminal designations (Page 21).

6.6 Connecting the control contact and signaling contacts of the buffer module

Buffer modules with double-layer capacitors have one control contact and two signaling contacts.

- Buffer operation can be enabled, inhibited or exited using control contact "X1" and "X2".
- Information about the charge state of the buffer module can be obtained via signaling contact "13" and "14".
- Information about buffer operation can be obtained via signaling contact "23" and "24".

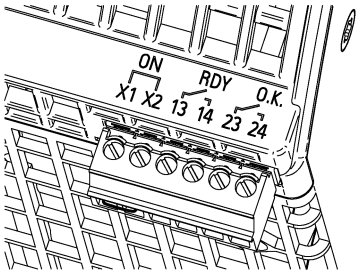

Control contact

The control contact is implemented as contact pair and when delivered has a wire jumper. Instead of the wire jumper, a floating (isolated) contact can be switched in the system; this means for a scheduled operational shutdown of the power supply, buffer operation is prevented, therefore unnecessarily discharging the buffer module. Buffer operation is immediately exited if the contact is opened during buffer operation.

When closed, the contact must have a resistance < 10 Ohm.

The precise function of the control contact is described under Buffer modules (Page 39) and in Section Activating and deactivating buffer operation (Page 79).

You can obtain more information about the assignment of the control contact under Connections and terminal designations (Page 21).

Signaling contacts

The signaling contacts are NO contacts, and allow information about the operating state of the buffer module to be processed further.

Contact rating: 60 V DC/0.3 A

The precise function of the signaling contacts is described under Buffer modules (Page 39).

You can obtain more information about the assignment of the signaling contacts under Connections and terminal designations (Page 21)

Engineering and remote access

7

7.1 General information

Content of Chapter "Engineering and remote access"

This section describes those software tools offered by Siemens that are compatible with the SITOP PSU8600. The software tools are introduced with their functions, the associated requirements and the operation. The software products are:

- SIMATIC STEP 7 in the TIA Portal
- SIMATIC STEP 7

Functions of the individual software products:

- SIMATIC STEP 7 in the TIA Portal:

  SITOP PSU8600 can be used with STEP 7 in the TIA Portal from Version 13. After SITOP PSU8600 has been saved in the hardware catalog of STEP 7 in the TIA Portal, it can be integrated into projects, parameterized and diagnosed.

- SIMATIC STEP 7:

  SITOP PSU8600 can be used with STEP 7 from version V5.5 and higher. After SITOP PSU8600 has been saved in the hardware catalog of STEP 7, it can be integrated into projects, parameterized and diagnosed.

7.2 Overview of application examples

You can find the following application example for parameterizing the SITOP PSU8600 power supply system at our support website:

- Using graphic and communication blocks to integrate the SITOP PSU8600 into an automation system (PSU8600 graphic and communication blocks (https://support.industry.siemens.com/cs/ww/en/view/102379345))

7.3 SIMATIC STEP 7 in the TIA Portal

The SITOP PSU8600 power supply system can be used with STEP 7 in the TIA Portal from version 13.0.

In STEP 7 in the TIA Portal, the SITOP PSU8600 basic device and its SITOP CNX8600 and SITOP BUF8600 supplementary modules can be integrated, parameterized and diagnosed in the projects.

Note

To be able to use SITOP PSU8600 and the supplementary modules with STEP 7 in the TIA Portal you must install the corresponding Hardware Support Package (HSP) - or the appropriate generic station description file (GSD).

You can find additional information at Installing the Hardware Support Package (HSP) (Page 116) or Geräte-Stammdaten-Datei (GSD) installieren (Page 117).

7.3.1 Installing the Hardware Support Package (HSP)

To use SITOP PSU8600 and the supplementary modules with STEP 7 in the TIA Portal, you must install the corresponding hardware support package (HSP). You can obtain the HSP at our SITOP- homepage (http://www.siemens.com/sitop) or directly at (https://support.industry.siemens.com/cs/ww/en/view/102254062).

Procedure

To install the hardware support package, proceed as follows:

1. Start STEP 7 V13 in the TIA Portal.
2. Click in the project view in the "Options" menu on "Support Packages"

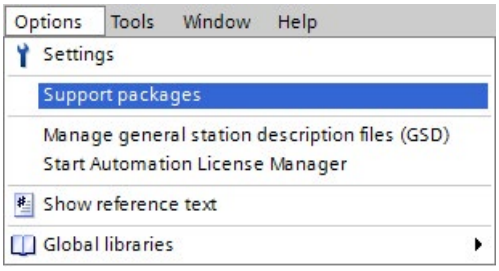

   Dialog "Detailed information" opens. All support packages from the directory that you specified as storage location for support packages in the settings are listed in a table.
3. You have the following possibilities to install the hardware support package:
   - If the support package is already present on your computer or on a connected data storage medium, you can add it to the list using "Add from file system".
   - If you wish to load a support package from the "Service & Support" page in the Internet, initially download it using "Load from the Internet".
     You can then add from the file system.

4. Select the support package that you want to install.
5. Click on "Install", and follow the instructions of the installation program. During the installation you will be prompted to close all TIA Portal instances.

   As soon as this has been realized, the installation is continued by clicking on "Continue".
6. After the Support Package has been installed, the TIA Portal is reinitialized by clicking on "Restart".

The installed devices are imported into the module catalog and can then be integrated in the project. You can find the SITOP PSU8600 in the hardware catalog under "Power Supplies\SITOP PSU\PSU8600".

Note

You can find additional information on installing hardware support packages in the manual of your STEP 7 software.

7.3.2 Geräte-Stammdaten-Datei (GSD) installieren

To use SITOP PSU8600 and the supplementary modules with STEP 7 in the TIA Portal, as an alternative to the hardware support package (HSP) you can install the appropriate generic station description file (GSD).

The GSD file is available through our SITOP homepage (http://www.siemens.com/sitop) or directly at (https://support.industry.siemens.com/cs/ww/en/view/102254061).

Preconditions

- You know where the GSD file is saved.

Procedure

To install the generic station description file, proceed as follows:

1. Download the GSD file from the Internet.
2. Start STEP 7 V13 in the TIA Portal.
3. In the project view, click in the menu "Options" on "Install general station description file (GSD)" or "Manage general station description file (GSD)".

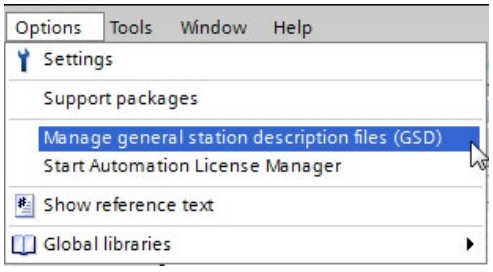

   The "Manage general station description file (GSD)" dialog is opened.
4. Select the source path under which you locally saved the GSD file that you downloaded.

5. Select the GSD file.
6. Click on "Install", and follow the instructions of the installation program.

The installed devices are imported into the module catalog and can then be integrated in the project.

You can find the SITOP PSU8600 in the hardware catalog under
"Other field devices\PROFINET IO\I/O\Siemens AG\SITOP PSU\PSU8600".

7.3.3 Inserting SITOP PSU8600 into a project

To be able to use the SITOP PSU8600, you must assign an IO controller as IO device (SIMATIC S7 control). Further, the SITOP PSU8600 in the project can be equipped with one or several supplementary modules.

The main views used to configure the SITOP PSU8600 are the Network view and the Device view.

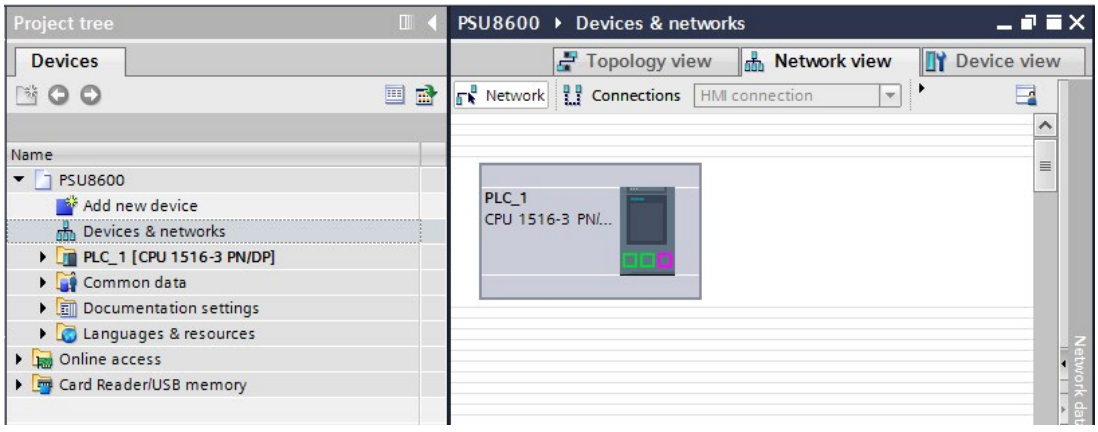

Note

Additional information on the Network view and Device view, as well as the Topology view is available in the manual for your STEP 7 software.

Preconditions

- The hardware support package or the general station description file of the SITOP PSU8600 has been installed.
- STEP 7 in the TIA Portal has been opened, and a project created with an IO controller (SIMATIC S7 control).

Inserting SITOP PSU8600 from the hardware catalog

1. Open the Network view.
2. Open the "Hardware catalog" task card.
3. **If you use the SITOP PSU8600 with the hardware support package:**

   In the "Catalog" palette, navigate to the SITOP PSU8600 under Power Supplies\SITOP PSU\PSU8600.
4. **If you use the SITOP PSU8600 with the general station description file:**

   In the "Catalog" palette, navigate to the SITOP PSU8600 under Other field devices\PROFINET IO\I/O\Siemens AG\SITOP PSU\PSU8600.
5. Select the required SITOP PSU8600 with a mouse click.

   In the "Information" area you can see information about the SITOP PSU8600, and when necessary change the preselected version.
6. Drag the SITOP PSU8600 and drop it into the Network view.

   Alternatively, the module can also be added to the network view by double-clicking on the entry in the Hardware catalog.

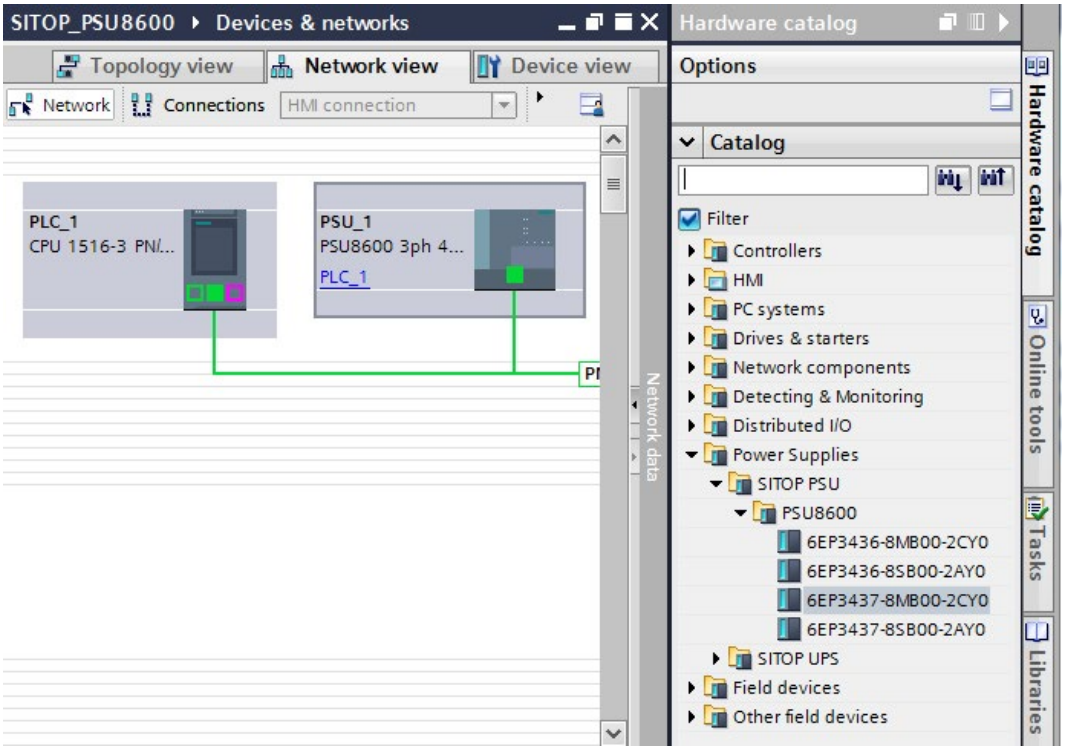

You have now inserted the SITOP PSU8600 into the project. The rectangle displayed in the network view symbolizes the SITOP PSU8600.

7.3.4 Assigning a SITOP PSU8600 to a controller

To be able to use the PSU8600 you must assign an IO controller as IO device.

1. Click in the network view on the blue lettering "Not assigned" at the left next to the symbol of the PSU8600.



A menu opens with the controllers that are available.

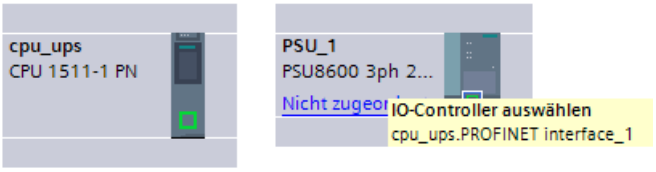

2. Select a controller in the menu.
3. Select the connection between the controller and PSU8600.

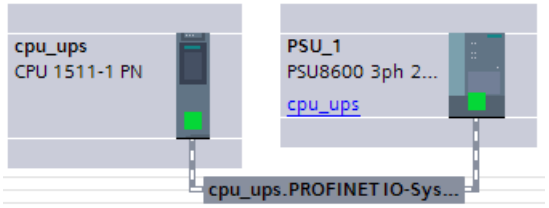

4. Make the required settings in the "Network data" editor.
5. Double-click on PSU8600 to display it in the device view.
6. Select the PROFINET-interface.

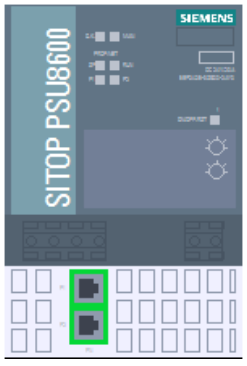

7. In the inspector window under "Properties > General > Profinet interface [X3] > Ethernet addresses", enter the IP address of the PSU8600, which was already assigned in the TIA Portal .

You have assigned a controller to the PSU8600.

7.3.5 Assigning supplementary modules to the SITOP PSU8600 basic device

Assigning a SITOP CNX8600 expansion module

The number of outputs can be increased by using an expansion module. A SITOP PSU8600 basic device can be equipped with a maximum of four SITOP CNX8600 expansion modules.

Expansion module versions:

- 4 outputs with max. 5 A per output, Article number 6EP4436-8XB00-0CY0
- 4 outputs with max. 10 A per output, Article number 6EP4437-8XB00-0CY0

Note

You can combine both expansion module versions with a basic unit. You can freely select the arrangement at the slots.

The number of expansion modules that can be configured is limited to four.

Preconditions

- STEP 7 in the TIA Portal has been opened and a project has been created.
- A SITOP PSU8600 basic unit has been integrated in the project.

Procedure

1. Select the basic device in the Device view.

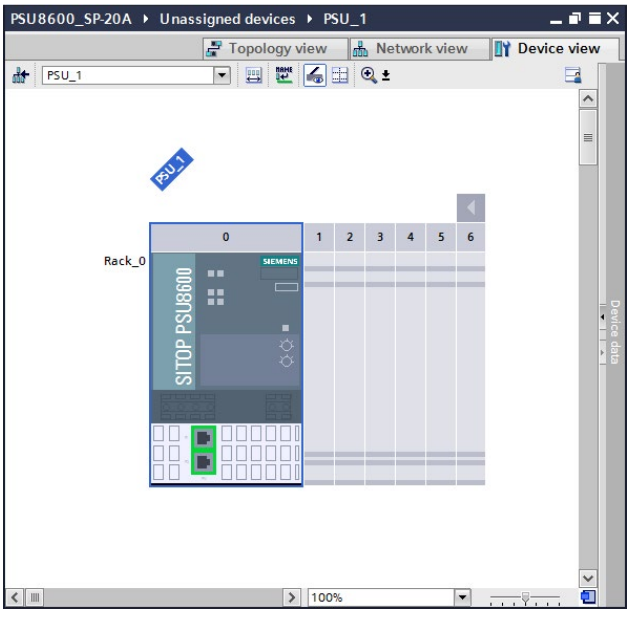

2. Navigate in the Hardware catalog to the expansion modules under Power Supplies\SITOP PSU\PSU8600\CNX8600.

3. Select the required expansion module in the Hardware catalog. In the "Information" area you can see information about the expansion module, and when necessary you can change the preselected (default) version.
4. Drag the expansion module and drop it into the Device view.

   Alternatively, the expansion module can also be added by double-clicking on the entry in the Hardware catalog.
5. Drag and drop the expansion module to the required slot to the right of the SITOP PSU8600.

   The expansion module is inserted into the selected slot.

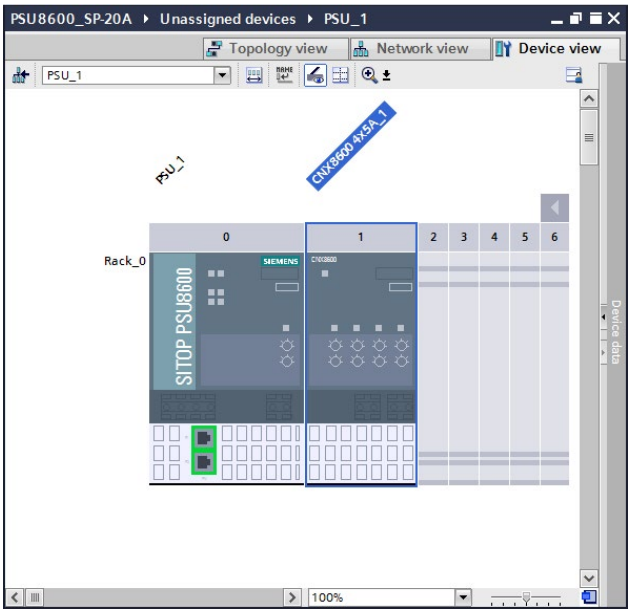

6. Save the hardware configuration.

You have assigned an expansion module to the basic unit. How you parameterize the expansion module is described under Output 1, output 1 (Page 134).

Assigning a buffer module SITOP BUF8600

A buffer module permits buffering when the power fails. A SITOP PSU8600 basic unit can be equipped with a maximum of two SITOP BUF8600 buffer modules.

Buffer module versions

BUF8600 buffer modules with electrolytic capacitors:

- Buffer time of 100 ms at 40 A, Article number 6EP4297-8HB00-0XY0
- Buffer time of 300 ms at 40 A, Article number 6EP4297-8HB10-0XY0

BUF8600 buffer modules with double-layer capacitors:

- Buffer time of 4 s at 40 A, Article number 6EP4293-8HB00-0XY0
- Buffer time of 10 s at 40 A, Article number 6EP4295-8HB00-0XY0

Note

It is possible to use different buffer modules in one system. This means, for example, that a buffer time of 10300 ms (10000 ms + 300 ms) can be implemented. The number of buffer modules that can be configured is limited to two.

Preconditions

- STEP 7 in the TIA Portal has been opened and a project has been created.
- A SITOP PSU8600 basic unit has been integrated in the project.

Procedure

1. Select the SITOP PSU8600 in the Device view.
2. Navigate in the Hardware catalog to the buffer modules under Power Supplies\SITOP PSU\PSU8600\BUF8600.

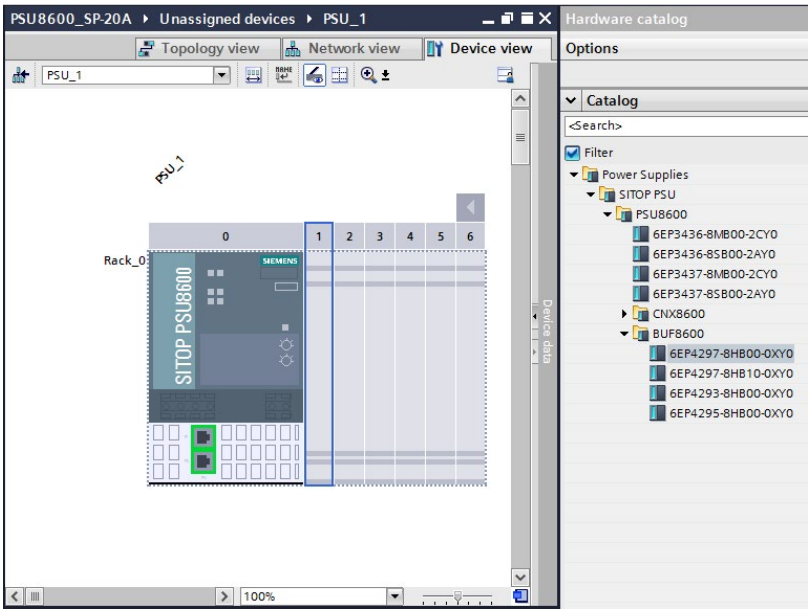

3. Select the required buffer module in the Hardware catalog.

   In the "Information" area you can see information about the buffer module and when necessary change the preselected version.

4. Drag and drop the buffer module in the Device view.
   Alternatively, the buffer module can also be added by double-clicking on the entry in the Hardware catalog.

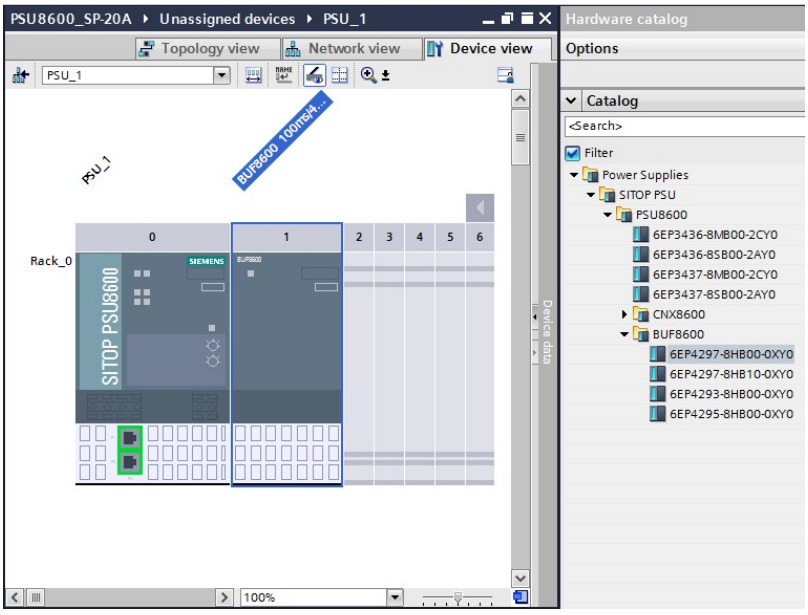

5. Drag and drop the buffer module to the required slot to the right next to the SITOP PSU8600.
   The buffer module is inserted in the selected slot.
6. Save the hardware configuration.

You have assigned a buffer module to the basic unit.

7.3.6 Parameter assignment

7.3.6.1 Parameters of the basic units and the supplementary modules

The adjustable parameters of SITOP PSU8600 and the supplementary modules being used can be found in STEP 7 in the TIA Portal in the Inspector window under Properties if the appropriate device was selected.

Parameters of the basic unit

For the parameterization, in the navigation area, the settings under "General > Device configuration" and "General > Web server" are relevant.

Navigation area		Description
Device configuration	General	Make the following settings: • Define the prioritization for output 1 for buffering when the power fails. • Define which output characteristic should be used. • Define a threshold for the output of an alarm. An alarm is output if this threshold is continually exceeded for 5 ms. • Define the system start characteristics. • Define the dead time for system overload alarm message. • Define the dead time for buffering mode alarm.
	Buffering	The parameters are set here for buffer modules with double-layer capacitors. Parameterization is only possible if an appropriate buffer module is in the system. • Deactivate the buffer component using a control command. • Enable the "LONGLIFE" operating mode. • Define the threshold value for the "Sufficient buffer readiness" message • Enable short-time interruption at output 1. • Define the dead time for buffering mode alarm. • Define the waiting time until short-time interruption. • Define the duration of short-time interruption.
	Output 1	Make the following settings for the output: • Switch-on and switch-off output. • Setpoint output voltage • Response threshold value of the output current • Define a threshold to issue an alarm. An alarm is output if this threshold is continually exceeded for 5 ms. • Define the on delay. • Define the ELECTRONIC SHUTDOWN or CONSTANT CURRENT modes

Navigation area		Description
	PROFIenergy	Here, you can activate and configure energy management based on PROFIenergy
Web server	General	Make the following settings: • Possibility of accessing via a web server (yes / no) • Automatic logoff when closing the web server (yes / no) • Permit access only via HTTPS (yes/no)
	Automatic update	Make the following settings: • Activate automatic update (yes / no) • Time interval for the update

A detailed description of the individual parameters is provided in Sections Parameterizing the basic unit (Page 128) and Output 1, output 1 (Page 134).

Note

In addition, under "Device configuration > Outputs 1…4" by activating the point "The configuration of the output can differ during runtime because it is controlled remotely" the note can be saved as to whether the parameters for the output are controlled during the runtime from a PLC program. For a download, this information is not written to the device, it is only saved in the STEP 7 project file.

Parameters of the expansion modules

For the parameterization of the expansion modules, in the navigation area, the settings under "Module configuration > Outputs 1…4" are relevant.

Navigation area		Description
Module configuration	Outputs 1 … 4	Make the following settings for the individual outputs: • Switch-on and switch-off output. • Setpoint output voltage • Response threshold value of the output current • Define a threshold to issue an alarm. An alarm is output if this threshold is continually exceeded for 5 ms. • Define the on delay. • Define the ELECTRONIC SHUTDOWN or CONSTANT CURRENT operating modes

A detailed description of the individual parameters is provided in Sections Output 1, output 1 (Page 134) and .

Note

In addition, under "Module configuration > Outputs 1…4", by activating the point "The configuration of the output can differ during runtime because it is controlled remotely" a note can be saved as to whether the parameters for the output can be controlled from a PLC program during the runtime. For a download, this information is not written to the device, it is only saved in the STEP 7 project file.

Parameters of buffer modules with electrolytic capacitors

With the exception of the standard settings for IO devices, the buffer modules with electrolytic capacitors have no configurable parameters.

Parameters of buffer modules with double-layer capacitors

- **BUF8600 4s/40A** (6EP4293-8HB00-0XY0)
- **BUF8600 10s/40A** (6EP4295-8HB00-0XY0)

For the parameterization of the buffer modules with double-layer capacitors, in the navigation area, select "General > Device configuration > Buffering".

7.3.6.2 Parameterizing the basic unit

The procedure is the same for all parameters. The individual parameters and their possible values are described in the following sections.

Preconditions

- The SITOP PSU8600 was integrated in the opened project

Procedure

1. Select the SITOP PSU8600 in the Device view.
2. In the inspector window, select "Properties > General > Device configuration".

   Entries for parameterization are provided in the navigation area.

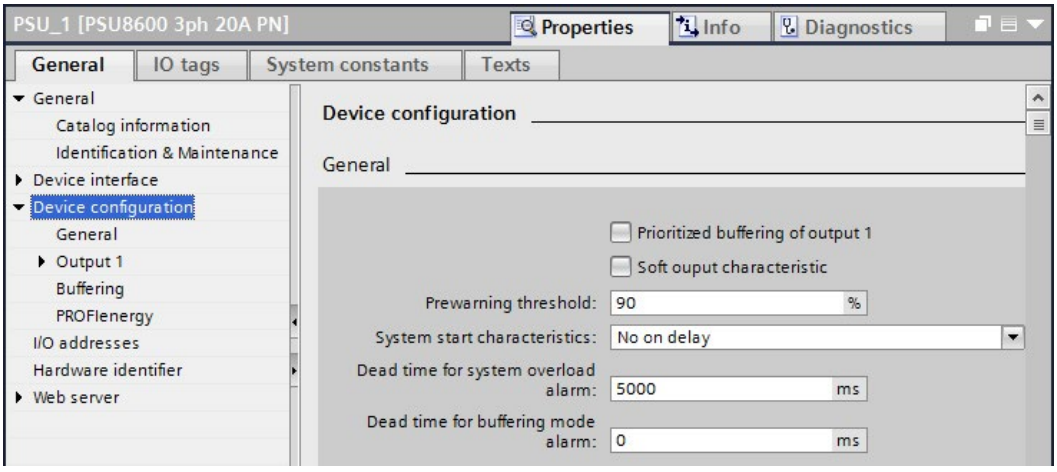

Parameters, general

Parameter	Value range	Default setting
Prioritized buffering of output 1	Yes/no	No
Soft output characteristic	Yes/no	No
Prewarning threshold	0 - 100 %	90 %
System start characteristics	• No on delay • 25 ms on delay • 100 ms on delay • Load-optimized on delay • Variable on delay	No on delay
Dead time for system overload alarm	0 - 6 0000 ms	5 000 ms
Dead time for buffer operation alarm	0 - 1 000 ms	0 ms

- **Prioritized buffering of output 1**

  When the power fails, output 1 of the basic device can be prioritized so that it is still supplied.

  Prioritizing output 1 means that the longest possible buffer time is ensured for this output. If output 1 is prioritized, all of the remaining outputs are shut down at approximately half of the nominally available buffer time for the remaining duration of the power failure. LEDs "ON/OFF/RST" of the outputs that have been shut down are lit red.

  Outputs 2...n, which are shut down when the power fails as output 1 has priority, are automatically switched-on again when the line supply returns.

  For the basic device, the typical buffer time is 15 ms, additional buffer modules extend the buffer time.

- **Soft output characteristic**

  The output voltage decreases with increasing output current. This means that for full output current the highest output voltage can normally no longer be attained.

- **Prewarning threshold**

  When changes are made, the prewarning threshold for the summed current allows you to quickly check the utilization of the overall system. This is especially of interest when expanding the system. Using the prewarning threshold increases operational reliability.

  Enter a value of "0 %" to deactivate the prewarning threshold.

- **System start characteristics**

  In order to reduce the load on the overall SITOP PSU8600 power supply system as a result of simultaneous switch-on current peaks of the loads at the various outputs, an on delay between the outputs can be selected when switching on.

  When the on delay is activated, the outputs are sequentially switched-on with a 25 ms or 100 ms delay time between the outputs, or load optimized.

  When the variable on delay is activated, you can assign individual on delay times to the individual outputs.

- **Dead time for system overload alarm**

  A system overload alarm is only initiated if a continuous system overload occurs, which is longer than the set dead time.

- **Dead time for buffer operation alarm**

  A buffer operation alarm is only initiated if the power continuously fails for a time that is longer than the set dead time.

Buffering parameters

Parameters	Value range	Default setting
Buffer component disabled via control command	Yes/no	No
Enable LONGLIFE operating mode	Yes/no	No
Threshold value for sufficient buffer readiness	10 - 90 %	85 %
Enable short-time interruption at output 1	Yes/no	No
Dead time for buffering mode alarm	0 - 60 000 ms	3 000 ms
Wait time up to short time interruption	0 - 300 000 ms	15 000 ms
Duration of the short time interruption	0 - 60 000 ms	5 000 ms

Examples for conversion

ms (milliseconds)	s (seconds)	m (minutes)
3 000	3	
5 000	5	
15 000	15	¼
60 000	60	1
300 000	300	5

- **Buffer component disabled via control command**

  Buffer modules with double-layer capacitors can be deactivated using a control command. If the parameters are to be activated, then **all** of the buffer components in the system are deactivated. System buffering using buffer components is therefore deactivated; this function can be used for smoothly commissioning the system.

  Note

  Deactivation via control command is independent of deactivation via control contact, and further, has the same priority as deactivation using the control contact. This means that both options to activate the buffer components (control command and control contact) must be set at the same time (this corresponds to the default setting), in order to allow the system to be buffered.

- **Enable LONGLIFE operating mode**

  In order to increase the service life of the buffer modules with double-layer capacitors, these can be operated in the "LONGLIFE" mode with reduced buffer capacity. When the buffer module is completely charged, power failures of up to a maximum of 3 s (6EP4293-8HB00-0XY0) or up to a maximum of 8 s (6EP4295-8HB00-0XY0) can be buffered with a load current of 40 A.

- **Threshold value for sufficient buffer readiness**

  The charge state of the buffer components in the system can be interrogated using the threshold value. The value as a percentage refers to the maximum amount of energy that can be stored; for several buffer components in the system, the sum of the maximum amounts of energy that can be stored. This means that it can be ensured that a process is only started if sufficient buffer energy is available to buffer a possible power failure.

- **Enable short-time interruption at output 1**

  If the function is activated, then when the power supply returns during buffer operation, the voltage at output 1 is interrupted for a time that can be parameterized. This can be used to automatically restart a PC, which was run down after the start of buffer operation to back up data, when the power returns.

- **Dead time for buffering mode alarm**

  Using the parameter, the time is defined that must elapse until after the start of buffer operation an alarm message "Buffer operation" is output. This means that very short power failures can be easily buffered, and the alarm message suppressed. For power failures that last for a longer period of time, the alarm message can then be used to initiate other specific measures, for example, safely running down a PC.

- **Waiting time until short-time interruption**

  The parameter is used to define the minimum time that must elapse after the "Buffer operation" alarm message, before the output voltage at output 1 is interrupted when the power supply returns during buffer operation. For instance, this can be the time that a PC requires to safely run down.

- **Duration of short-time interruption**

  The parameter is used to define the time for which output 1 is interrupted during buffer operation when the power returns (for example to restart a PC after it has been run down).

Output parameters

Outputs are parameterized at the basic units and at the expansion modules in the same identical way. You can find a list of the parameters under Output 1, output 1 (Page 134).

PROFIenergy parameters

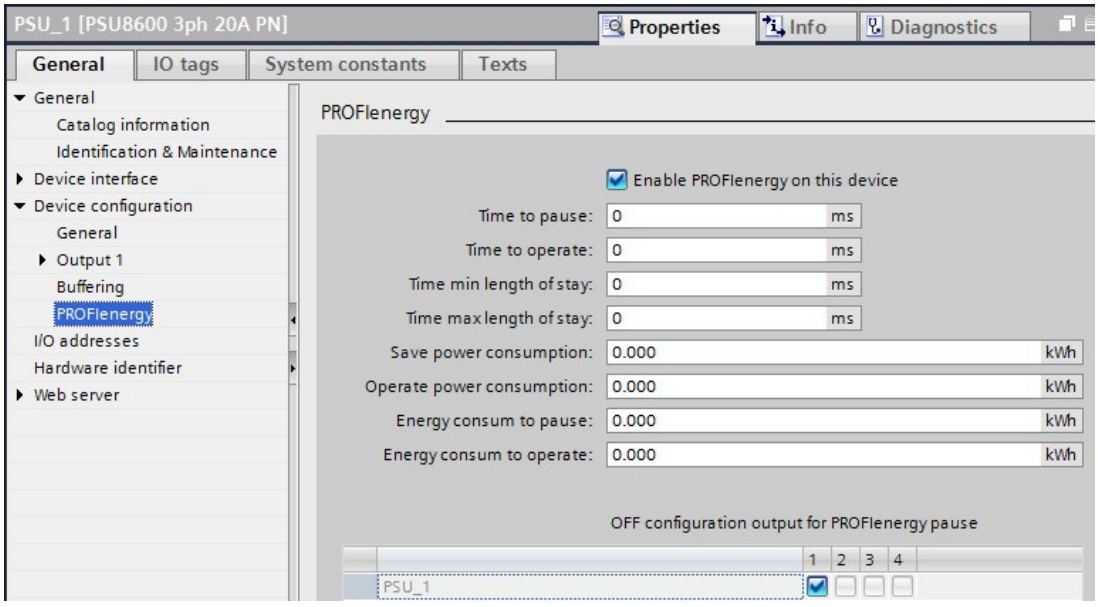

Parameter	Value range	Default setting
Activate PROFIenergy on this device	Yes/no	No
Time to pause	0 … 2147483647	0 ms
Time to operate	0 … 2147483647	0 ms
Time min length of stay	0 … 2147483647	0 ms
Time max length of stay	0 … 2147483647	0 ms
Save power consumption	0.000 … 100000.000	0.00 kW
Operate power consumption	0.000 … 100000.000	0.00 kW
Energy consum to pause	0.000 … 100000.000	0.00 kWh
Energy consum to operate	0.000 … 100000.000	0.00 kWh

PROFIenergy output parameters

The outputs are selected by setting a checkmark.

Parameters	Default setting
Outputs that can be switched off for a PROFIenergy pause	None

Web server parameters

Parameter	Value range	Default setting
Activate web server on this module	Yes/no	No
Enable automatic logoff	Yes/no	No
Permit access only with HTTPS	Yes/no	No
Enable automatic update	Yes/no	No
Update interval	0 / 5 s / 10 s / 20 s / 30 s / 60 s	10 s

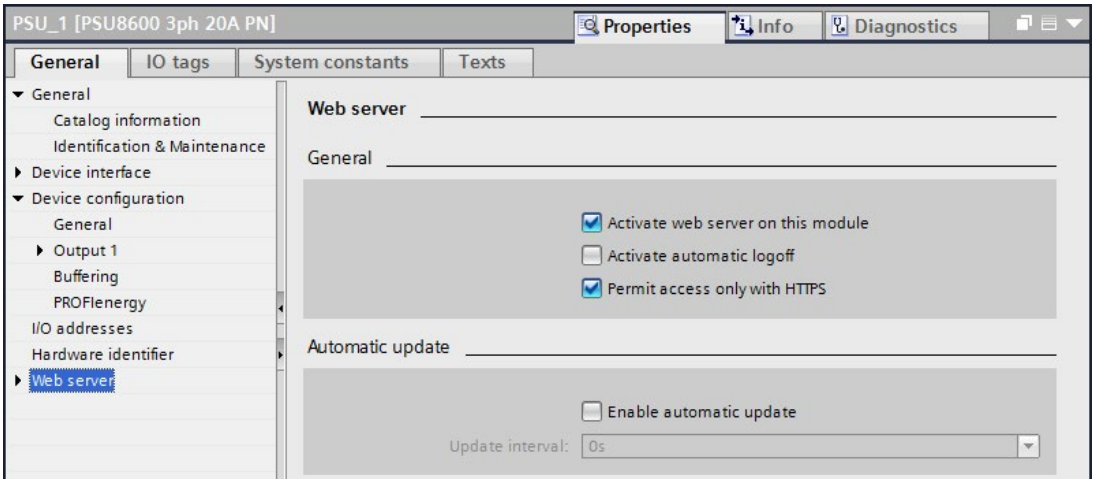

- **Activate web server on this module**

  Define as to whether the device may be accessed via the web server. You will find further information on the web server under Web server (Page 162).

- **Enable automatic logoff**

  Define whether a user should be automatically logged off after closing the web server.

- **Permit access only with HTTPS**

  Define whether access is only permissible with HTTPS.

- **Enable automatic update**

  When you enable "Automatic update" then the actual values of the SITOP PSU8600 and connected supplementary modules are sent to the web server.

- **Update interval**

  Define the interval in which the actual values are sent to the web server.

See also

Web server (Page 162)

7.3.6.3 Output 1, output 1

The procedure is the same for all parameters. The individual parameters and their possible values are described in the following sections.

Preconditions

- The SITOP PSU8600 was integrated in the opened project
- When configuring an expansion module, this must be assigned to the SITOP PSU8600.

Procedure

1. Select the SITOP PSU8600 or the expansion module in the Device view.
2. In the inspector window in the navigation area, open the range of the required output.
3. You can see the possible subgroups for parameterization.

Parameter output 1

Parameter	Value range	Default setting
Setpoint output voltage	4 - 28 V	24.0 V
Response threshold of the output current	2 - 20 A or 4 - 40 A	20 A or 40 A
Prewarning threshold output current	0 - 100 %	90 %
On delay	Variable	Dependent on the settings in the basic unit
Mode	ELECTRONIC SHUTDOWN / CONSTANT CURRENT	ELECTRONIC SHUTDOWN

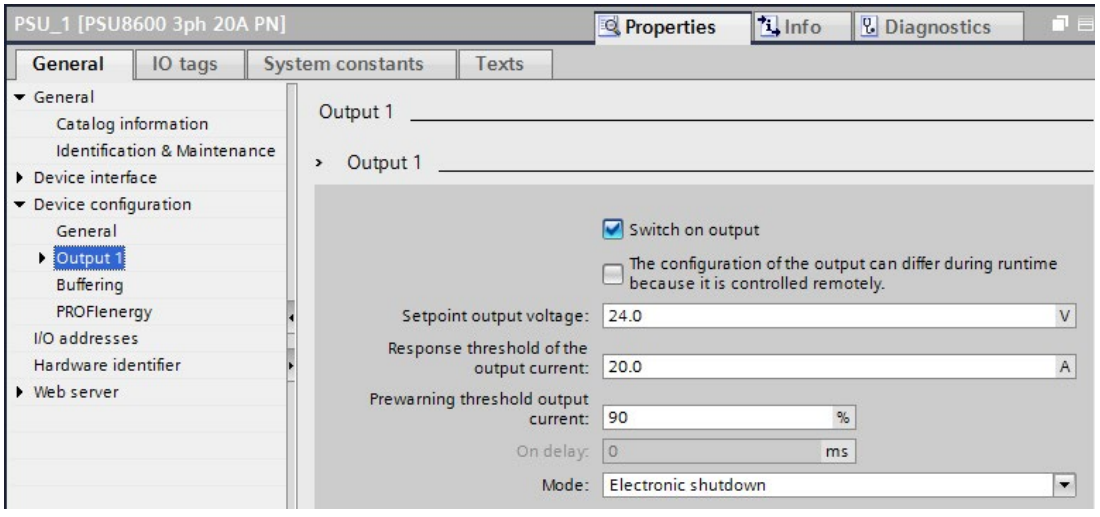

- **Setpoint output voltage**

  Define the required output voltage.

- **Response threshold of the output current**

  Define the required response threshold value of the output current for the particular output.

- **Prewarning threshold output current**

  Using prewarning thresholds for the output current of the individual outputs, you can identify at an early stage slight (creeping) changes in the current demand of the connected load. This prewarning function facilitates the highest possible availability of the system (maintenance function).
  To deactivate the prewarning threshold, enter "0 %" as value.

- **Switch on delay**

  In order to reduce the load on the overall SITOP PSU8600 power supply system as a result of simultaneous switch-on current peaks of the loads at the various outputs, an on delay between the outputs can be selected when switching on.

  When the on delay is activated, the outputs are sequentially switched-on with a 25 ms or 100 ms delay time between the outputs, or load optimized.

  When the variable on delay is activated, you can assign individual on delay times to the individual outputs.

- **Mode**

  Two overload responses can be defined for all outputs:

  – In the ELECTRONIC SHUTDOWN operating mode, overload is permitted for a defined time. The output is electronically shut down after the limit value has been exceeded (see Overload shutdown and carrying out a reset (Page 56)).

  – In the CONSTANT CURRENT operating mode, an overload current is continually permissible (U/I curve) according to a defined characteristic. The overload current is limited to a maximum of 150 % of the setting value of the current potentiometer for a duration of 5 seconds (LED "ON/OFF/RST" flashes green with 2 Hz); the current is then limited to 100 % of the setting value (LED "ON/OFF/RST" flashes green with 1 Hz) as long as there is an overload condition.

7.3.7 Loading the configuration (commissioning)

In the delivered state, the SITOP PSU8600 has not yet been assigned any IP address and the DHCP protocol is deactivated.

When the SITOP PSU8600 is first connected with a controller (SIMATIC S7- control system), it must be assigned a device name and an IP address by the controller. A new configuration can be loaded to the device using STEP 7 in the TIA Portal.

Identifying a SITOP PSU8600 in the network

From STEP 7 you can flash the LED "SF" at the SITOP PSU8600 so that you can uniquely identify the module in a network.

Preconditions

- The SITOP PSU8600 has been correctly connected and linked with the network.
- PG/PC with STEP 7 in the TIA Portal is connected with the network.

Procedure

1. From the toolbar, open the "Online > Accessible nodes" menu.
2. Select "PN/IE" as the PG/PC interface type.
3. Select the PG/PC interface that is connected to the network.
4. Select the connection with the Subnet, in which the SITOP PSU8600 is located.
   All of the available SITOP PSU8600 devices in the selected subnet are displayed.
5. Select the required SITOP PSU8600.
6. Activate the "Flash LED" checkbox.

   

7. Check at which SITOP PSU8600 in the network the "SF" LED flashes.

   By checking the flashing LEDs, you can uniquely identify all SITOP PSU8600 in a network.
8. Note the Device name and the IP address of the required SITOP PSU8600 in order to load a configuration.

Changing the Device name of a SITOP PSU8600

1. In STEP 7, in the tabular area of the Network view, select the "Network overview" table.
2. In the "Device" column, overwrite the name in the line of the PROFINET device involved.

   You have changed the name of the SITOP PSU8600 device.

   The name is adapted in the graphic area of the network view.

Changing the PROFINET device name of the SITOP PSU8600 via the properties of the PROFINET interface

You can change the PROFINET device name via the properties of the PROFINET interface.

1. In the Network or Device view of the Hardware and Network editor of STEP 7, select the PROFINET interface of a PROFINET device.
2. In the Inspector window navigate to "Ethernet addresses" in the "PROFINET" area.

3. Deactivate the "Generate PROFINET device name automatically" checkbox.
4. Enter the new PROFINET device name into the appropriate field.

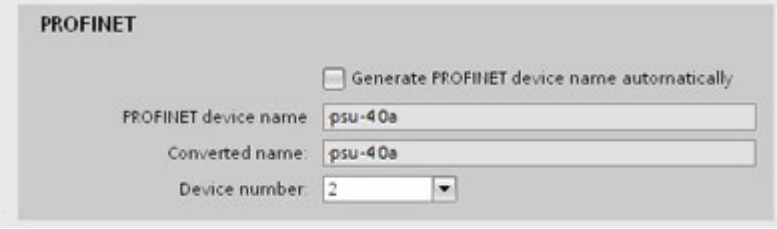

Changing the IP address of a SITOP PSU8600

1. Select the PROFINET interface of a PROFINET device in the Network or Device view of the Hardware and Network editor of STEP 7 in the TIA Portal.
2. In the Inspector window navigate to "Ethernet addresses" in the "IP protocol" area.
3. Check whether the "Set IP address in the project" option is activated.
4. Enter the new IP address in the appropriate field.

Loading the configuration to the SITOP PSU8600

For commissioning, you must load the project data that you created offline into the connected SITOP PSU8600. This project data results from the configuration of the hardware, networks and connections in STEP 7.
Initially, the complete project data is loaded. Only the changes are subsequently loaded.

Preconditions

- The project data is consistent.
- The Device name must be identical, offline and online.
- The SITOP PSU8600 is accessible online.
- The SITOP PSU8600 is located in the PROFINET IO system of an IO controller.
- The PG/PC is connected to the same network to which the SITOP PSU8600 and the controller are connected. The interface of the PG/PC must be set to TCP/IP.

Note

Ensure that the article number of the SITOP PSU8600 configured offline matches the article number of the device connected online.

Procedure

1. In the Project tree, right-click on the SITOP PSU8600 controller.
   The shortcut menu opens.

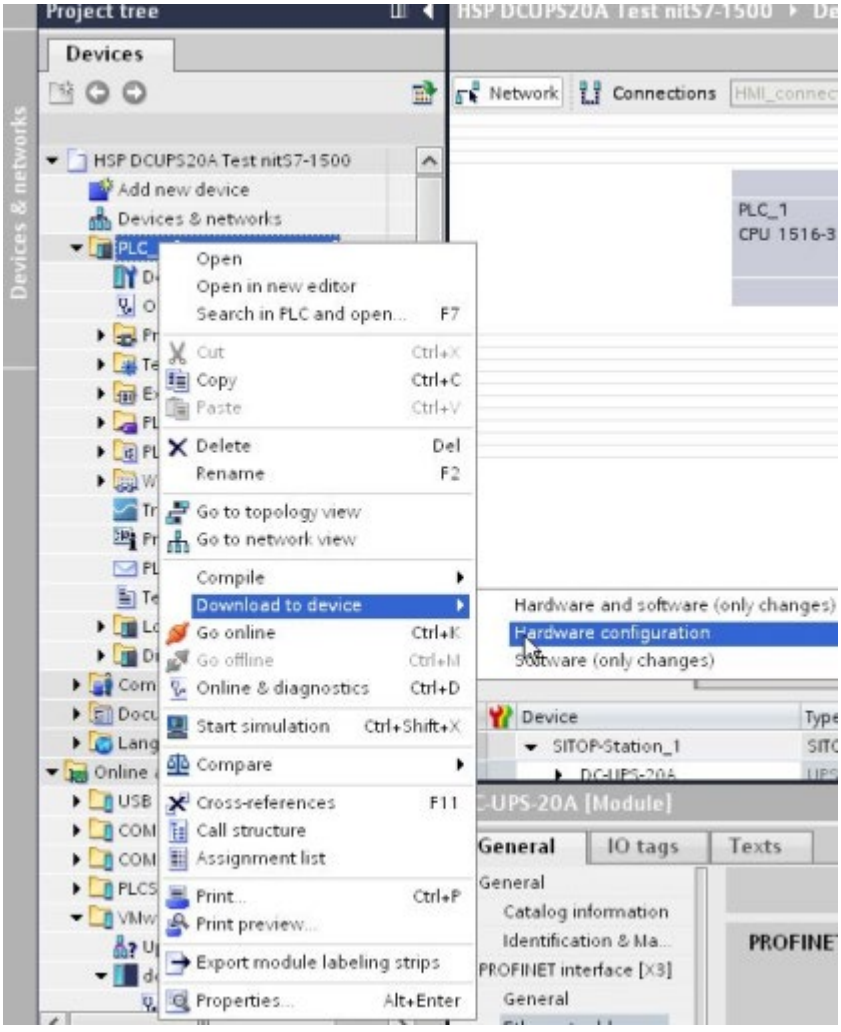

2. In the shortcut menu, in submenu "Download to device", select option "Hardware configuration".

   The project data are compiled. The "Load" button is activated as soon as loading is possible.

3. Click on "Load".

   Data is loaded. The "Result of the load operation" dialog window is opened. In this dialog, you can check whether the load task was successful and select any further actions.

4. Click on the "Finish" button.

   The selected project data have been loaded to the SITOP PSU8600 via the controller.

7.3.8 Diagnostics

The following data can be retrieved using the online and diagnostics function:

Navigation area		Value
General	Module	Short designation
		Order number
		Hardware
		Firmware
	Module information	Device name
		Module name
		Plant designation
		Location ID
	Manufacturer information	Description of manufacturer
		Serial number
		Copyright entry
		Profile
		Profile details
Diagnostic status	Status	List of detailed information
	Default diagnostics	List of detailed information
PROFINET interface	Ethernet address / network connection	MAC address
	Ethernet address / IP parameter	IP address
		Subnet mask
		Default router
		IP settings
		IP setting time
	Ports	List of ports
Functions	Assign an IP address	MAC address
		IP address
		Subnet mask
		Router address
	Firmware update / PSU8600	Order number
		Firmware
		Name
		Rack
		Slot
		Firmware file
		Firmware version
		Suitable for modules with
		Status
	Assign name	PROFINET device name
		Type
	Reset to factory settings	MAC address

Navigation area		Value
		IP address
		PROFINET device name

Retrieve the online and diagnostics data of SITOP PSU8600

Proceed as follows to start the online and diagnostics view for a specific module:

Project tree:

1. Open the device folder of the SITOP PSU8600 in the Project tree.
2. Double-click on "Online & diagnostics".

   or

3. Select the device folder of the SITOP PSU8600 in the Project tree.
4. In the shortcut menu or in the "Online" main menu, select the "Online & diagnostics" command.

Device view:

1. Open the Device view of the Device configuration.
2. Select the SITOP PSU8600.
3. In the shortcut menu or in the "Online" main menu, select the "Online & diagnostics" command.

Network view:

1. Open the Network view of the Device configuration.
2. Select the SITOP PSU8600.
3. In the shortcut menu or in the "Online" main menu, select the "Online & diagnostics" command.
4. Click on "Connect online ".

   The information is displayed under "Diagnostics / General".

7.3.9 Firmware update

The firmware update process is described in detail in the "Firmware update readme", which is provided with the firmware update download package. Please follow the instructions provided there very carefully. The files for updating the firmware are available online at: (https://support.industry.siemens.com/cs/ww/en/view/102295547)

7.3.10 Reset to factory settings

A reset to the factory settings deletes all hardware and software configurations stored in the SITOP PSU8600 and restores the factory settings.

This affects, for example:

- IP address
- Device name
- Parameter values for the SITOP PSU8600 and assigned supplementary modules

Proceed as follows to reset the SITOP PSU8600 factory settings:

1. Select SITOP PSU8600 in the Network view and change to the Device view.
2. Click on the "Go online" button.
3. In the SITOP PSU8600 shortcut menu, select "Online & diagnostics".
4. In the "Functions" folder, select the "Reset to factory settings" group.

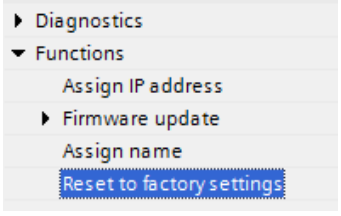

5. Click on the "Reset" button.
6. Respond to the confirmation prompt with "OK".

7.4 SIMATIC STEP 7

The SITOP PSU8600 power supply system can be used with STEP 7 from version 5.5.

In STEP 7, the basic device SITOP PSU8600 and its supplementary modules SITOP CNX8600 and SITOP BUF8600 can be integrated, parameterized and diagnosed in the projects.

7.4.1 Installing the device data file (GSD)

To use the SITOP PSU8600 and the supplementary modules in STEP 7 you must install the appropriate generic station description (GSD). This GSD file is available at our SITOP home page (http://www.siemens.com/sitop) or directly under (https://support.industry.siemens.com/cs/ww/en/view/102254061).

Preconditions

- STEP 7 has been opened and a project has been created.
- At least one station has been added.
- You know where the GSD file is saved.

Procedure

1. Download the GSD from the Internet.
2. Close all stations in "HW Config".
3. Select the menu command "Options > Install GSD files".

   Dialog "Install GSD files" opens.
4. Select the GSD file and click on the "Install" button.

   Note

   If the file was not able to be installed, or if errors occurred during installation, then STEP 7 creates a report file. You can open this log file by clicking on the "Display log" button.
5. In the "Options" menu, click on "Update Catalog".

The installed devices are imported into the module catalog and can then be included in the project. You can find SITOP PSU8600 in the hardware catalog under "PROFINET IO\I/O\PSU8600".

7.4.2 Inserting SITOP PSU8600 into a project

To be able to use the SITOP PSU8600 you must assign an IO controller as IO device (SIMATIC S7 control).

Preconditions

- The GSD file of the SITOP PSU8600 has been installed.
- STEP 7 has been opened and a project has been created with an IO controller (SIMATIC S7 control).

Creating a subnet

1. Open the hardware view "HW Config".
2. Call the shortcut menu of line "PN-IO", and select "Insert PROFINET IO system".

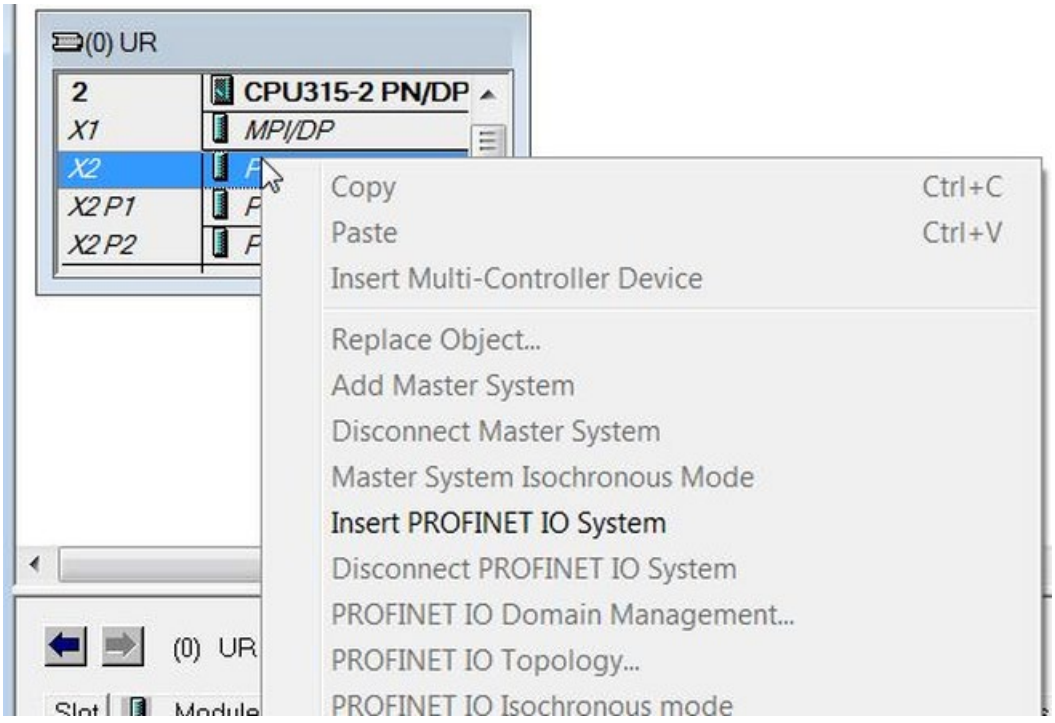

3. In dialog field "Properties - Ethernet interface PN-IO", select the "Parameter" tab, set the IP address of the PROFINET interface and create a new subnet.

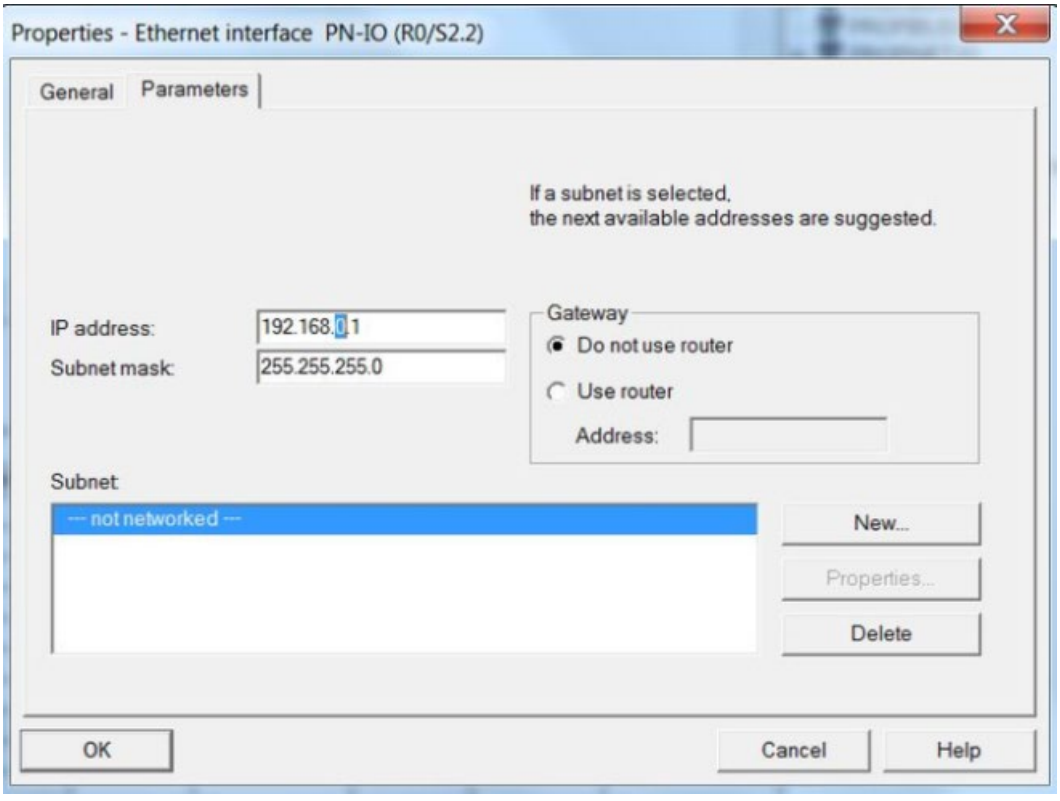

4. Confirm the properties of the new subnet and close the "Properties - Ethernet interface PN-IO" dialog box.

   The subnet is displayed as a horizontal line in the hardware view.

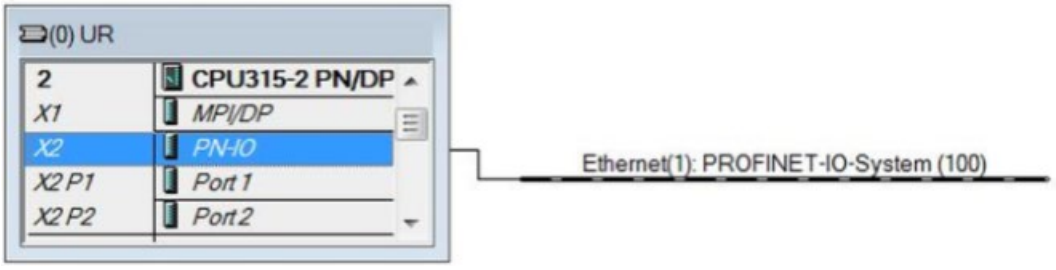

Inserting SITOP PSU8600 from the hardware catalog

1. Select the subnet.
2. Open the "Catalog" window using the "View > Catalog" menu command.
3. In the hardware catalog, navigate to SITOP PSU8600 under "PROFINET IO\I/O\PSU8600".

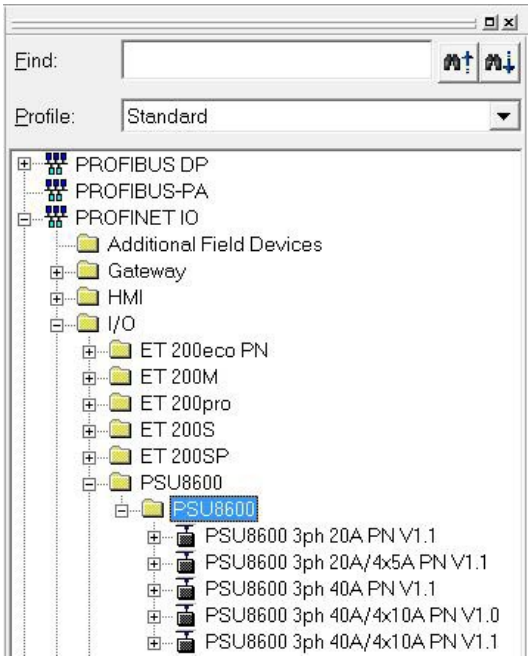

4. Click the desired SITOP PSU8600; keep the left mouse button pressed and drag the SITOP PSU8600 to the subnet.
5. Double-click on SITOP PSU8600.
   In the open dialog box, enter the device name, device number and IP address in the Ethernet.
6. Save the hardware configuration.

You have now inserted the SITOP PSU8600 into the project. The rectangle displayed in the editor symbolizes the SITOP PSU8600.

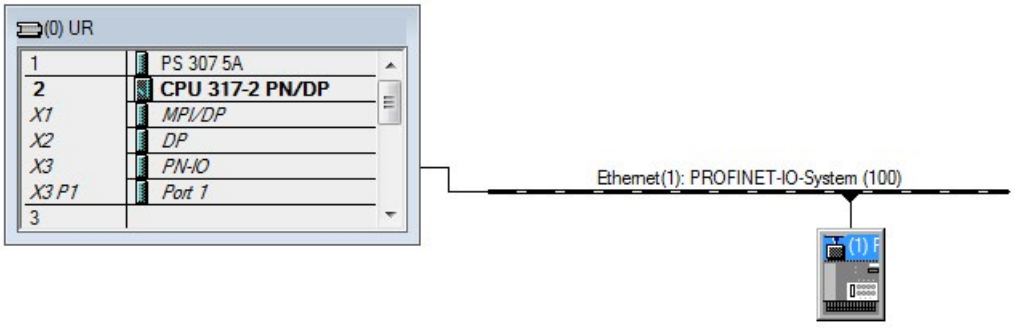

7.4.3 Assigning supplementary modules to the basic unit

Assigning an expansion module

The number of outputs can be increased by using an expansion module. A SITOP PSU8600 basic device can be equipped with a maximum of four SITOP CNX8600 expansion modules.

Expansion module versions:

- 4 outputs with max. 5 A per output, Article number 6EP4436-8XB00-0CY0
- 4 outputs with max. 10 A per output, Article number 6EP4437-8XB00-0CY0

Note

You can combine both expansion module versions with a basic device. You can freely select the arrangement at the slots.

The number of expansion modules that can be configured is limited to four.

Preconditions

- STEP 7 is opened and a project with an IO controller is created.
- A SITOP PSU8600 basic device has been integrated in the project.

Procedure

1. In the graphic editor, select the hardware configuration of the basic device to display the PSU8600 station window.
2. Navigate in the Hardware catalog to the expansion modules under PROFINET IO\I/O\PSU8600\CNX8600.

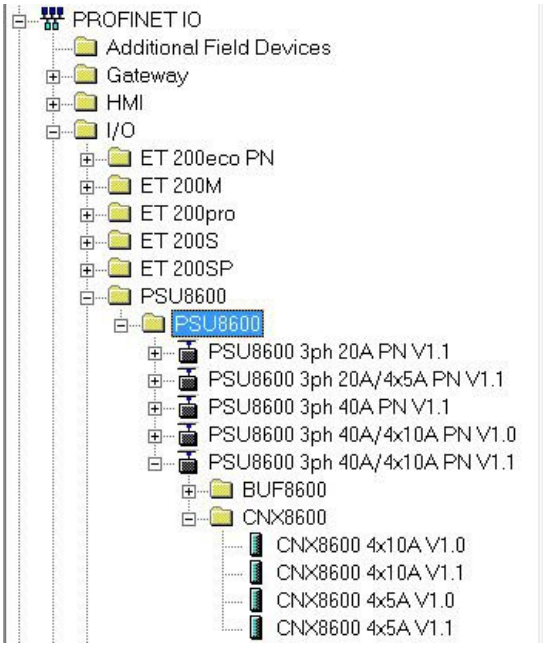

3. Select the required expansion module in the Hardware catalog and drag the expansion module and drop it into the required slot in the station window.

   Alternatively, the expansion module can also be added by double-clicking on the entry in the Hardware catalog.

   The expansion module is inserted into the selected slot.

4. Save the hardware configuration.

   You have assigned an expansion module to the basic device. How you parameterize the expansion module is described under Output 1, output 1 (Page 157).

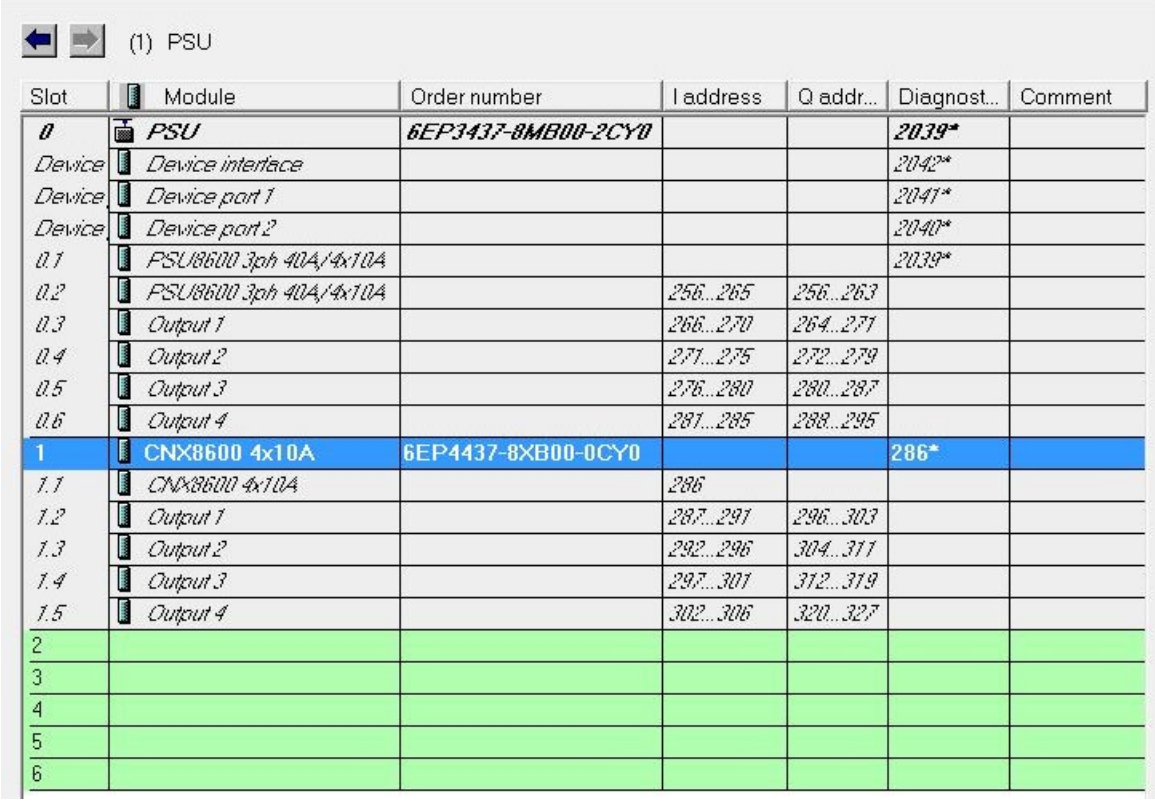

(1) PSU

Slot	Module	Order number	I address	Q addr...	Diagnost...	Comment
0	PSU	6EP3437-8MB00-2CY0			2039*	
Device	Device interface				2042*	
Device	Device port 1				2041*	
Device	Device port 2				2040*	
0.1	PSU8600 3ph 40A/4x10A				2039*	
0.2	PSU8600 3ph 40A/4x10A		256...265	256...263		
0.3	Output 1		266...270	264...271		
0.4	Output 2		271...275	272...279		
0.5	Output 3		276...280	280...287		
0.6	Output 4		281...285	288...295		
1	CNX8600 4x10A	6EP4437-8XB00-0CY0			286*	
1.1	CNX8600 4x10A		286			
1.2	Output 1		287...291	296...303		
1.3	Output 2		292...296	304...311		
1.4	Output 3		297...301	312...319		
1.5	Output 4		302...306	320...327		
2						
3						
4						
5						
6						

Assigning a buffer module

A buffer module permits buffering when the power fails. A SITOP PSU8600 basic device can be equipped with a maximum of two SITOP BUF8600 buffer modules.

Buffer module versions

BUF8600 buffer modules with electrolytic capacitors:

- Buffer time of 100 ms at 40 A, Article number 6EP4297-8HB00-0XY0
- Buffer time of 300 ms at 40 A, Article number 6EP4297-8HB10-0XY0

BUF8600 buffer modules with double-layer capacitors:

- Buffer time of 4 s at 40 A, Article number 6EP4293-8HB00-0XY0
- Buffer time of 10 s at 40 A, Article number 6EP4295-8HB00-0XY0

Note

It is possible to use different buffer modules in one system. This means, for example, that a buffer time of 10300 ms (10000 ms + 300 ms) can be implemented.

Preconditions

- STEP 7 is opened and a project with an IO controller is created.
- A SITOP PSU8600 basic device has been integrated in the project.

Procedure

1. In the graphic editor, select the hardware configuration of the basic device to display the PSU8600 station window.
2. Navigate in the Hardware catalog to the buffer modules under PROFINET IO\I/O\PSU8600\BUF8600.

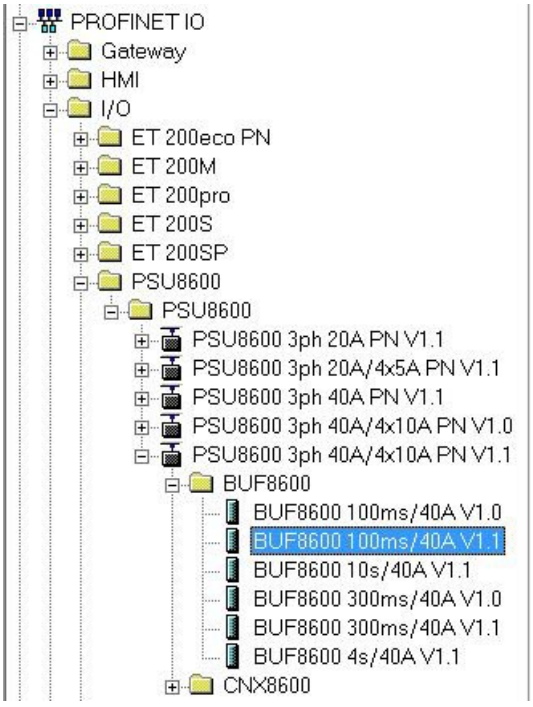

3. Select the required buffer module in the Hardware catalog and drag the buffer module and drop it into the required slot in the station window.

   Alternatively, the buffer module can also be added by double-clicking on the entry in the Hardware catalog.

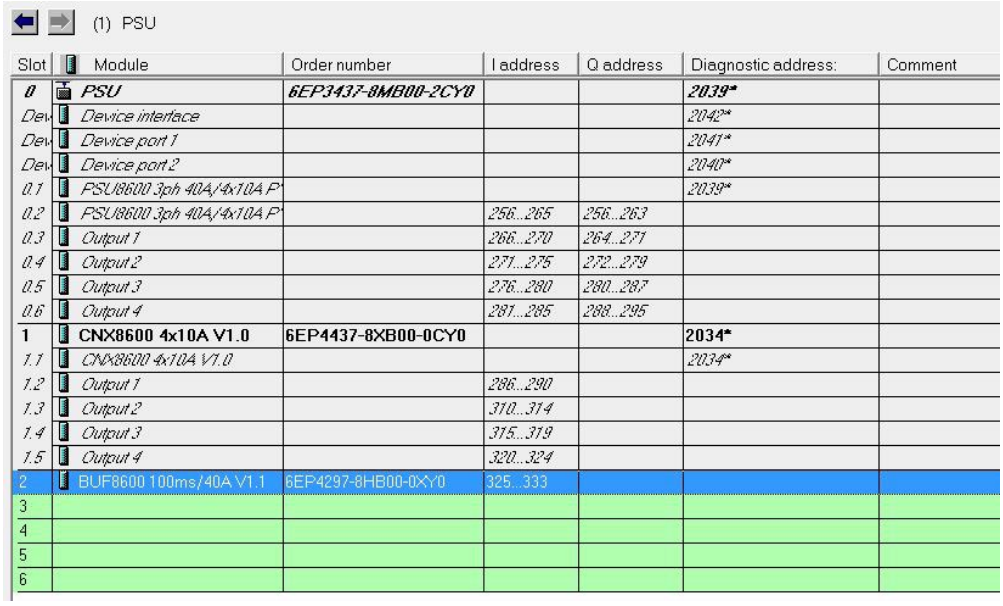

Slot	Module	Order number	I address	Q address	Diagnostic address:	Comment
0	PSU	6EP3437-8MB00-2CY0			2039*	
Dev	Device interface				2042*	
Dev	Device port 1				2041*	
Dev	Device port 2				2040*	
0.1	PSU8600 3ph 40A/4x10A P				2039*	
0.2	PSU8600 3ph 40A/4x10A P		256...265	256...263		
0.3	Output 1		266...270	264...271		
0.4	Output 2		271...275	272...279		
0.5	Output 3		276...280	280...287		
0.6	Output 4		281...285	288...295		
1	CNX8600 4x10A V1.0	6EP4437-8XB00-0CY0			2034*	
1.1	CNX8600 4x10A V1.0				2034*	
1.2	Output 1		286...290			
1.3	Output 2		310...314			
1.4	Output 3		315...319			
1.5	Output 4		320...324			
2	BUF8600 100ms/40A V1.1	6EP4297-8HB00-0XY0	325...333			
3						
4						
5						
6						

   The buffer module is inserted into the selected slot.

4. Save the hardware configuration.

You have assigned a buffer module to the basic device.

7.4.4 Parameter assignment

7.4.4.1 Parameterizing SITOP PSU8600

The procedure is the same for all parameters. This section describes the general procedure to reach the configuration dialog. The individual parameters and their possible values are described in the following subsections.

Preconditions

- The SITOP PSU8600 has been integrated in the opened project and networked.

Procedure

1. Open Network View "NetPro" ("Options > Configure Network").

   The controller and the networked SITOP PSU8600 are displayed.

2. In the network view, double-click on the SITOP PSU8600.
3. Open the hardware configuration.

   The hardware configuration opens.

4. In the hardware configuration, double-click on the entry of a SITOP PSU8600 in the station window (slot 0.1).
5. In the configuration dialog, click on the "Parameter" tab.
6. Click on the required subgroup.

   The subgroup opens.
7. Enter the values.
8. Confirm your entry by clicking on "OK".

   The parameters are stored in the project.

7.4.4.2 Parameters of the basic unit and supplementary modules

The adjustable parameters of SITOP PSU8600 in STEP 7 are subdivided into subgroups. These subgroups are shown in the table below.

Parameters of the basic unit

Subgroups "General", "PROFIenergy options", "PROFIenergy outputs" and "output 1" are relevant when parameterizing the basic device.

Subgroup	Description
General	Make the following settings in this subgroup: • Define the prioritization for output 1 for buffering when the power fails. • Define which output characteristic should be used. • Define a threshold for the output of an alarm. An alarm is output if this threshold is continually exceeded for 5 ms. • Define the system start characteristics. • Define the dead time for system overload alarm message. • Define the dead time for buffering mode alarm.
Buffering	• Buffer component disabled via control command. • Enable the "LONGLIFE" operating mode. • Define the threshold value for the "Sufficient buffer readiness" message. • Enable short-time interruption at output 1. • Define the dead time for buffering mode alarm. • Define the waiting time until short-time interruption. • Define the duration of short-time interruption.
PROFIenergy options	In these subgroups, you can activate and configure energy management based on PROFIenergy.
PROFIenergy outputs	

Subgroup	Description
Output 1	In these subgroups, make the following settings for the individual outputs: • Switch-on and switch-off output. • Setpoint output voltage • Response threshold value of the output current • Define a threshold for the output of an alarm. An alarm is output if this threshold is continually exceeded for 5 ms. • Define the on delay. • Define the ELECTRONIC SHUTDOWN or CONSTANT CURRENT operating modes
Web server	• Activate web server on this module • Activate automatic update. • Update interval • Activate automatic logoff • Permit access only with HTTPS.
General I&M	• Contact • Location ID

A detailed description of the individual parameters of the subgroups is provided in Sections Parameterizing the basic unit (Page 152) and Parameterizing output 1 (Page 157).

Parameters of the expansion modules

Subgroups "Outputs 1 … 4" are relevant when parameterizing expansion modules.

Subgroup	Description
Outputs 1 … 4	In these subgroups, make the following settings for the individual outputs: • Switch-on and switch-off output. • Setpoint output voltage • Response threshold value of the output current • Define a threshold for the output of an alarm. An alarm is output if this threshold is continually exceeded for 5 ms. • Define the on delay. • Define the ELECTRONIC SHUTDOWN or CONSTANT CURRENT operating modes

A detailed description of the individual parameters of the subgroups is provided in Section Parameterizing output 1 (Page 157).

Parameters of buffer modules with electrolytic capacitors

With the exception of the standard settings for IO devices, the buffer modules with electrolytic capacitors have no configurable parameters.

Parameters of buffer modules with double-layer capacitors

- **BUF8600 4s/40A** (6EP4293-8HB00-0XY0)
- **BUF8600 10s/40A** (6EP4295-8HB00-0XY0)

For the parameterization of buffer modules with double-layer capacitors, under the "Properties" tab for the basic device select the "Buffering" subgroup.

7.4.4.3 Parameterizing the basic unit

The procedure is the same for all parameters. This section describes the general procedure to reach the configuration dialog. The individual parameters and their possible values are described in the following subsections.

Preconditions

- The SITOP PSU8600 was integrated in the opened project

Procedure

1. Select SITOP PSU8600 in the "HW Config" view.
2. Double-click on the "Basic unit" module.
3. Open the "Parameter" tab.

   You will see the subgroups of the parameters.

Parameters, general

Parameter	Value range	Default setting
Prioritized buffering of output 1	Yes/no	No
Soft output characteristic	Yes/no	No
Prewarning threshold	0 - 100 %	90 %
System start characteristics	• No on delay • 25 ms on delay • 100 ms on delay • Load-optimized on delay • Variable switch on delay	No on delay
Dead time for system overload alarm	0 - 60 000 ms	5 000 ms
Dead time for buffer operation alarm	0 - 1 000 ms	0 ms

- **Prioritized buffering of output 1**

  When the power fails, output 1 of the basic device can be prioritized so that it is still supplied.

  Prioritizing output 1 means that the longest possible buffer time is ensured for this output. If output 1 is prioritized, all of the remaining outputs are shut down at approximately half

of the nominally available buffer time for the remaining duration of the power failure. LEDs "ON/OFF/RST" of the outputs that have been shut down are lit red.

Outputs 2...n, which are shut down when the power fails as output 1 has priority, are automatically switched-on again when the line supply returns.

For the basic device, the typical buffer time is 15 ms, additional buffer modules extend the buffer time.

- **Soft output characteristic**

  The output voltage decreases with increasing output current. This means that for full output current the highest output voltage can normally no longer be attained.

- **Prewarning threshold**

  When changes are made, the prewarning threshold for the summed current allows you to quickly check the utilization of the overall system. This is especially of interest when expanding the system. Using the prewarning threshold increases operational reliability. Enter a value of "0 %" to deactivate the prewarning threshold.

- **System start characteristics**

  In order to reduce the load on the overall SITOP PSU8600 power supply system as a result of simultaneous switch-on current peaks of the loads at the various outputs, an on delay between the outputs can be selected when switching on.

  When the switch on delay is activated, the outputs are sequentially switched-on with a 25 ms or 10 ms delay time between the outputs, or load optimized.

  When the variable on delay is activated, you can assign individual on delay times to the individual outputs.

- **Dead time for system overload alarm**

  A system overload alarm is only initiated if a continuous system overload occurs, which is longer than the set dead time.

- **Dead time for buffer operation alarm**

  A buffer operation alarm is only initiated if the power continuously fails for a time that is longer than the set dead time.

Buffering parameters

Parameters	Value range	Default setting
Buffer operation deactivated	Yes/no	No
Enable LONGLIFE operating mode	Yes/no	No
Threshold value for sufficient buffer readiness	10 - 90 %	85 %
Enable short-time interruption at output 1	Yes/no	No
Dead time for buffering mode alarm	0 - 60 000 ms	3 000 ms

Parameters	Value range	Default setting
Wait time up to short time interruption	0 - 300 000 ms	15 000 ms
Duration of the short time interruption	0 - 60 000 ms	5 000 ms

Examples for conversion

ms (milliseconds)	s (seconds)	m (minutes)
3 000	3	
5 000	5	
15 000	15	¼
60 000	60	1
300 000	300	5

- **Buffer component disabled via control command**

  Buffer modules with double-layer capacitors can be deactivated using a control command. If the parameters are to be activated, then **all** of the buffer components in the system are deactivated. System buffering using buffer components is therefore deactivated; this function can be used for smoothly commissioning the system.

  Note

  Deactivation via control command is independent of deactivation via control contact, and further, has the same priority as deactivation using the control contact. This means that both options to activate the buffer components (control command and control contact) must be set at the same time (this corresponds to the default setting), in order to allow the system to be buffered.

- **Enable LONGLIFE operating mode**

  In order to increase the service life of the buffer modules with double-layer capacitors, these can be operated in the "LONGLIFE" mode with reduced buffer capacity. When the buffer module is completely charged, power failures of up to a maximum of 3 s (6EP4293-8HB00-0XY0) or up to a maximum of 8 s (6EP4295-8HB00-0XY0) can be buffered with a load current of 40 A.

- **Threshold value for sufficient buffer readiness**

  The charge state of the buffer components in the system can be interrogated using the threshold value. The value as a percentage refers to the maximum amount of energy that can be stored; for several buffer components in the system, the sum of the maximum amounts of energy that can be stored. This means that it can be ensured that a process is only started if sufficient buffer energy is available to buffer a possible power failure.

- **Enable short-time interruption at output 1**

  If the function is activated, then when the power supply returns during buffer operation, the voltage at output 1 is interrupted for a time that can be parameterized. This can be used to automatically restart a PC, which was run down after the start of buffer operation to back up data, when the power returns.

- **Dead time for buffering mode alarm**

  Using the parameter, the time is defined that must elapse until after the start of buffer operation an alarm message "Buffer operation" is output. This means that very short power failures can be easily buffered, and the alarm message suppressed. For power failures that last for a longer period of time, the alarm message can then be used to initiate other specific measures, for example, safely running down a PC.

- **Waiting time until short-time interruption**

  The parameter is used to define the minimum time that must elapse after the "Buffer operation" alarm message, before the output voltage at output 1 is interrupted when the power supply returns during buffer operation. For instance, this can be the time that a PC requires to safely run down.

- **Duration of short-time interruption**

  The parameter is used to define the time for which output 1 is interrupted during buffer operation when the power returns (for example to restart a PC after it has been run down).

Output parameters

Outputs are parameterized at the basic units and at the expansion modules in the same identical way. You can find a list of the parameters under Output 1, output 1 (Page 157).

PROFIenergy parameters

Parameter	Value range	Default setting
Activate PROFIenergy on this device	Yes/no	No
Time to pause	0 … 2147483647	0 ms
Time to operate	0 … 2147483647	0 ms
Time min length of stay	0 … 2147483647	0 ms
Time max length of stay	0 … 2147483647	0 ms
Save power consumption	0.000 … 100000.000	0.00 kW
Operate power consumption	0.000 … 100000.000	0.00 kW
Energy consum to pause	0.000 … 100000.000	0.00 kWh
Energy consum to operate	0.000 … 100000.000	0.00 kWh

PROFIenergy output parameters

The outputs are selected using a binary number, which is converted into a decimal value.

Example

Binary number 1111101001 is converted into decimal value 1001.

Parameter	Value range	Default setting
Outputs that can be switched off for a PROFIenergy pause	0 … 65535	0

Web server

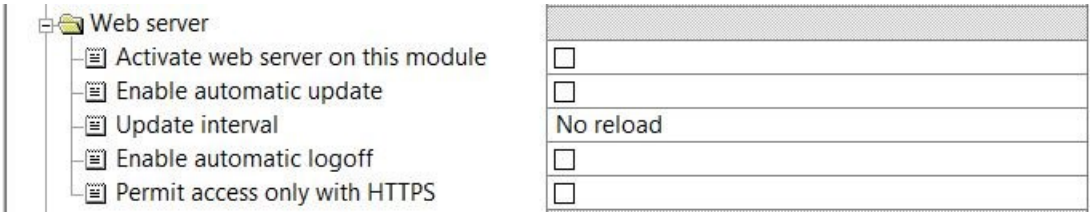

Parameter	Value range	Default setting
Activate web server on this module	Yes/no	No
Enable automatic update	Yes/no	No
Automatic update		
Update interval	0 / 5 s / 10 s / 20 s / 30 s / 60 s	10 s
Enable automatic logoff	Yes/no	No
Permit access only with HTTPS	Yes/no	Yes

- **Activate web server on this module**
  Define whether this device can be accessed via the web server. You will find further information on the web server under Web server (Page 162).
- **Enable automatic update**
  When you enable "Automatic update" then the actual values of the SITOP PSU8600 and connected supplementary modules are sent to the web server.
- **Update interval**
  You define in which intervals the actual values are sent to the web server.
- **Enable automatic logoff**
  You define whether, after closing the web server, the user is automatically logged off.
- **Permit access only with HTTPS**

  Define whether access is only permissible with HTTPS.

7.4.4.4 Parameterizing output 1

The procedure is the same for all parameters. The individual parameters and their possible values are described in the following sections.

Preconditions

- The SITOP PSU8600 was integrated in the opened project
- When configuring an expansion module, this must be assigned to the SITOP PSU8600.

Procedure

1. Select the SITOP PSU8600 or the expansion module in the Device view.
2. In the inspector window in the navigation area, open the range of the required output.
3. You can see the possible subgroups for parameterization.

Parameter output 1

Parameter	Value range	Default setting
Setpoint output voltage	4 - 28 V	24.0 V
Response threshold of the output current	2 - 20 A or 4 - 40 A	20 A or 40 A
Prewarning threshold output current	0 - 100 %	90 %
On delay	Variable	Dependent on the settings in the basic unit
Mode	ELECTRONIC SHUTDOWN / CONSTANT CURRENT	ELECTRONIC SHUTDOWN

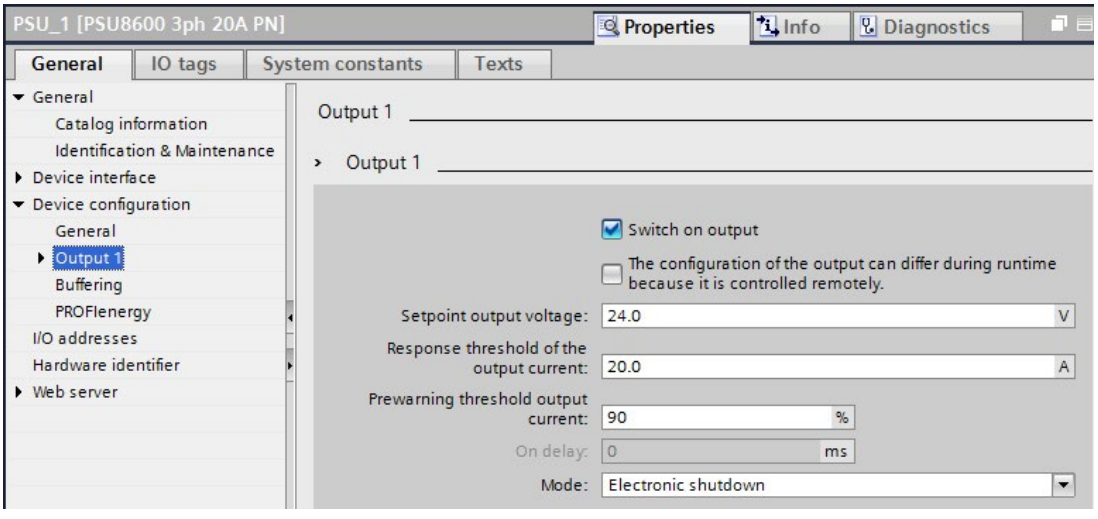

- **Setpoint output voltage**

  Define the required output voltage.

- **Response threshold of the output current**

  Define the required response threshold value of the output current for the particular output.

- **Prewarning threshold output current**

  Using prewarning thresholds for the output current of the individual outputs, you can identify at an early stage slight (creeping) changes in the current demand of the connected load. This prewarning function facilitates the highest possible availability of the system (maintenance function).
  To deactivate the prewarning threshold, enter "0 %" as value.

- **Switch on delay**

  In order to reduce the load on the overall SITOP PSU8600 power supply system as a result of simultaneous switch-on current peaks of the loads at the various outputs, an on delay between the outputs can be selected when switching on.

  When the on delay is activated, the outputs are sequentially switched-on with a 25 ms or 100 ms delay time between the outputs, or load optimized.

  When the variable on delay is activated, you can assign individual on delay times to the individual outputs.

- **Mode**

  Two overload responses can be defined for all outputs:

  – In the ELECTRONIC SHUTDOWN operating mode, overload is permitted for a defined time. The output is electronically shut down after the limit value has been exceeded (see Overload shutdown and carrying out a reset (Page 56)).

  – In the CONSTANT CURRENT operating mode, an overload current is continually permissible (U/I curve) according to a defined characteristic. The overload current is limited to a maximum of 150 % of the setting value of the current potentiometer for a duration of 5 seconds (LED "ON/OFF/RST" flashes green with 2 Hz); the current is then limited to 100 % of the setting value (LED "ON/OFF/RST" flashes green with 1 Hz) as long as there is an overload condition.

7.4.5 Loading the configuration (commissioning)

In the delivered state, the SITOP PSU8600 has not yet been assigned any IP address and the DHCP protocol is deactivated.

When the SITOP PSU8600 is first connected with a controller (SIMATIC S7 control), it must be assigned a device name and an IP address by the controller. A new configuration can be loaded to the device with STEP 7.

Preconditions

- The SITOP PSU8600 has been correctly connected and linked with the network.
- PG/PC with STEP 7 is connected with the network.

Displaying accessible nodes

Note

If nodes can only be accessed via interposed switches or routers (with protocol conversion), they are not displayed in the list of the accessible nodes.

1. Click in the "Target system" menu on "Display accessible nodes"
   The "Accessible nodes" window is opened with the following displays:
   - The station
   - The SITOP PSU8600

The following table shows which information is displayed in the "Object name" column.

Accessible nodes	Object name	Description
S7-CPU, PC station	Name of the station	The "Details" view also shows the operating state, module type and, if available, information from the associated STEP 7 project (station name, CPU name, system identification).

Initially loading the IO controller

Once you have configured the SITOP PSU8600 and the station, you must load this configuration into the IO controller (SIMATIC S7 control system). This is the way that the IO controller is assigned its configured IP addresses.

Before loading, carry out a consistency test to check the configuration for duplicate addresses, identical names, etc.

Inform yourself whether the IO controller to be loaded can also be initially loaded via the PROFINET interface. If not, you must first load the hardware configuration via the MPI interface.

1. Select in the "Target system > Load" menu.
2. Select the module to be loaded.
3. In the "Select node address" dialog, if necessary, click the "Display" button to display the actual accessible modules (these include the IO controller to be loaded with its current IP address or its MAC address, if no IP address is yet available).
4. Select the IO controller to be loaded from the accessible modules. This module is then displayed in the "Enter connection to target station" dialog box.
5. Start loading by clicking on the "OK" button.

   The IO controller is assigned the configured IP address.

Note

Ensure that the article number of the SITOP PSU8600 configured offline matches the article number of the device connected online.

Allocating the SITOP PSU8600 a device name (online)

In order that the configured IO controller can address the SITOP PSU8600, you must assign the configured device names to each of the individual IO devices (including the SITOP PSU8600).

For the procedure described below, the SITOP PSU8600 and the station for the PG/PC must be accessible online on the Ethernet.

1. Open "HW Config".
2. In the "Target system > Ethernet" menu, click on "Assign device name".
3. In the "Assign device name" dialog, in the "Device name" field, select SITOP PSU8600.
4. In the "Available devices" select the SITOP PSU8600. Using the "Flash" button, you can flash the LED on the SITOP PSU8600 so that the device can be uniquely identified.
5. Click on the "Assign name" button.

After the name assignment, you can bring the IO controller into the RUN operating state.

When powering up, the IO controller distributes the configuration information to the SITOP PSU8600 and then goes into cyclic operation.

7.4.6 Diagnostics

The following data can be retrieved using the Diagnostics function:

Group	Value
SITOP PSU8600 general	Article number
	Serial number

Retrieving diagnostics data

You can use the "Station > Open online" menu command in "HW Config" to select the SITOP PSU8600 and view the diagnostics data.

7.4.7 Firmware update

The firmware update process is described in detail in the "Firmware update readme", which is provided with the firmware update download package. Please follow the instructions provided there very carefully. The files for updating the firmware are available online at: (https://support.industry.siemens.com/cs/ww/en/view/102295547)

7.4.8 Reset to factory settings

With STEP 7 Version 5.5, it is possible to restore the factory setting of modules using the "Target system -> Edit Ethernet node".

Click the "Browse" button in the "Edit Ethernet node" dialog to select the MAC address of the SITOP PSU8600 where the factory settings should be restored. Then click on the "Reset" button. This deletes the IP address and the device name from the module.

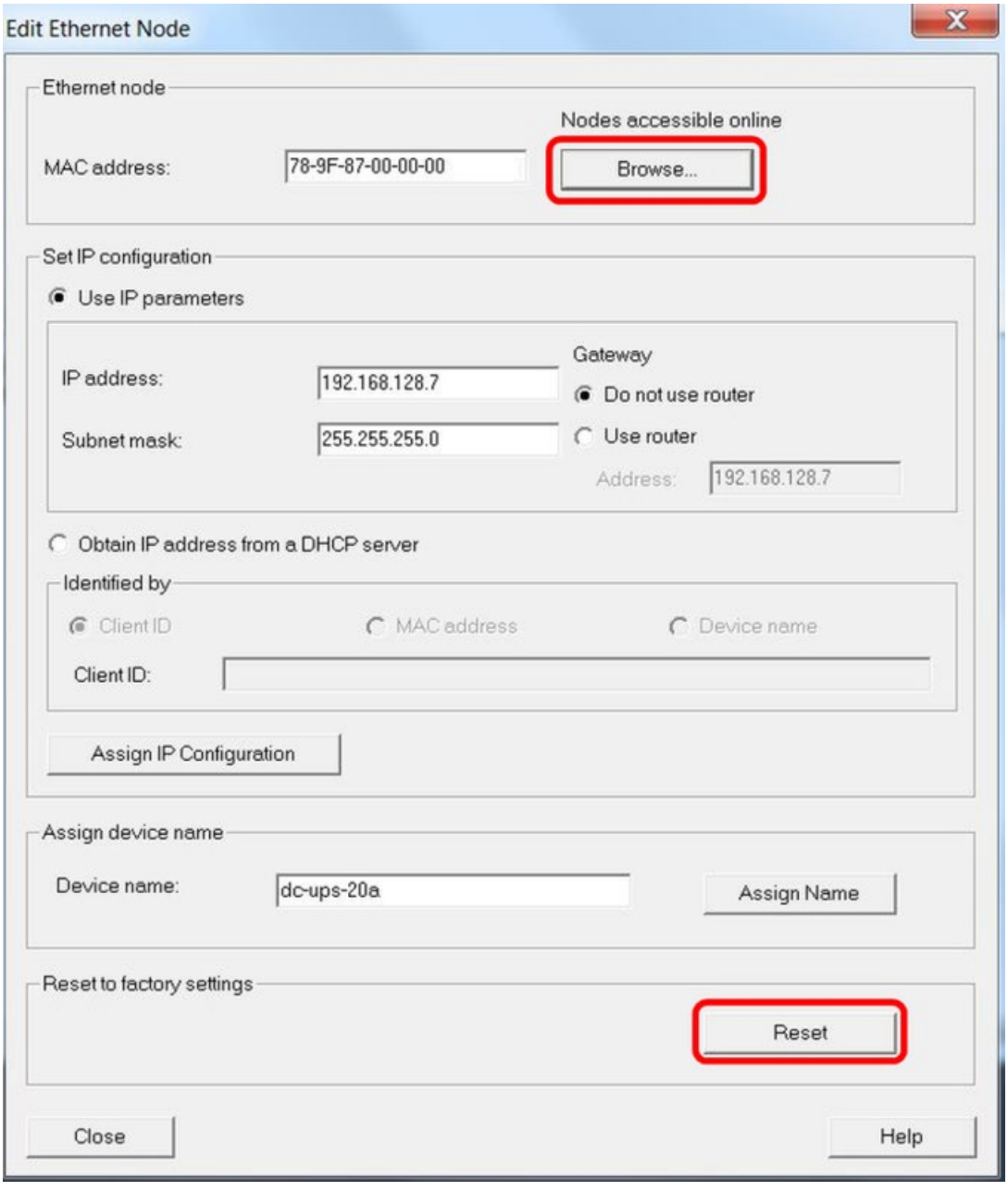

7.5 Web server

7.5.1 Accessing the web server

A web browser is used for access and operation.

The following web browsers are suitable:

- Internet Explorer V8 (on Microsoft Windows XP)
- Internet Explorer V10 (on Microsoft Windows 7)
- Internet Explorer V11 (on Microsoft Windows 7)
- Mozilla Firefox V40 (on Microsoft Windows 7)
- Google Chrome V44 (on Microsoft Windows 7)

Preconditions

- The computer with installed web browser is connected with the SITOP PSU8600 via Ethernet.
- The SITOP PSU8600 has an IP address that you know.
- In the MANUAL mode: DIP switch "WEN" (web server enable) is set to "ON". See Activating the web server on the module (Page 71)
- In the REMOTE mode: Web server access is activated.

  The following sections explain how to activate access to the web server:

  – For SIMATIC STEP 7 in the TIA Portal under Parameter assignment (Page 125).

  – For SIMATICSTEP 7 under Assigning supplementary modules to the basic unit (Page 146).

Procedure

1. Connect the client (PG, PC) via the PROFINET interface with the CPU.
2. Open the web browser.

   In the web browser address field, enter the IP address of SITOP PSU8600 in the form http://ww.xx.yy.zz or http://ww.xx.yy.zz (depending on the settings in the web server; default setting = https). Example of an entry: https://192.168.0.14.

3. Press the enter key.

   The system overview page opens with essential component diagnostic parameters.

4. Press Logon.

   Enter the logon information in the following logon page:

   Initial values:

   – User name: "admin"

   – Password: "admin"

   The license information of the SITOP PSU8600 - as well as the current web server certificate - can be downloaded to the logon page.

Note

Change the password after the first login.

The password must satisfy the following minimum requirements:

- min. 8 characters
- min. 1 uppercase letter
- min. 1 lowercase letter
- min. 1 digit
- min. 1 special character

The following characters are possible: ^[a-z0-9A-Z\\-_]+$

The starting page of SITOP PSU8600 is opened. You can navigate to further menus from the start page.

7.5.2 The web server user interface

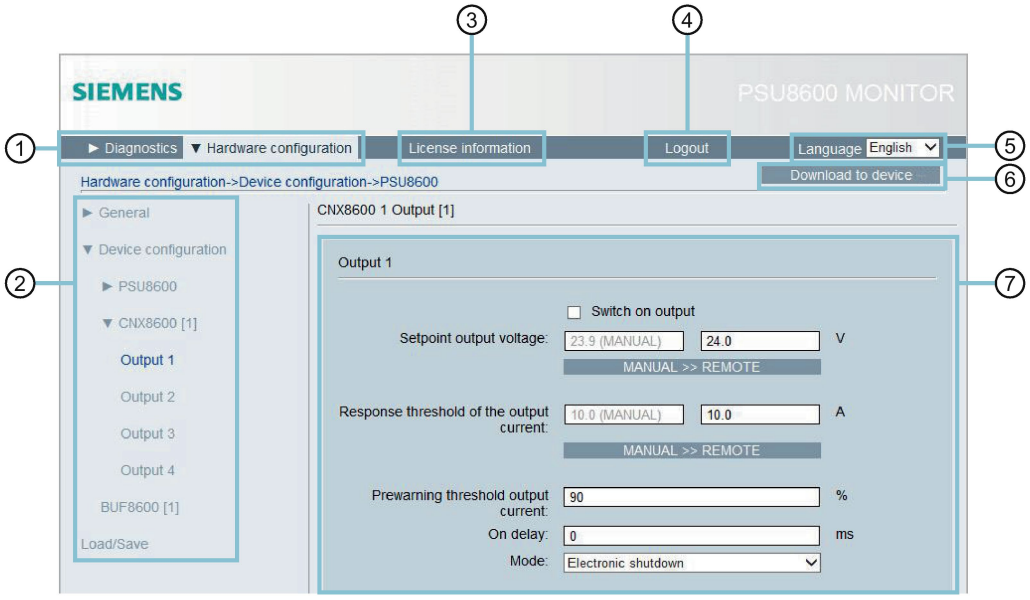

① Menu selection
② Navigation submenus
③ "License information" button
④ "Logout" button
⑤ Language selection
⑥ "Download to device" button
⑦ Editor area

The menu selection ① allows you to access menus "Diagnostics" and "HW configuration" and the various submenus. The functions of the menus are described in the following sections.

You access the submenus from the navigation submenus ②.

The associated settings possible in the selected submenu are made in the editor area ⑦.

You load the configuration to the devices by pressing button ③.

The language selection ⑤ is used to select the user interface language of the web server. German, English, French, Italian, Spanish, and Chinese are available as languages.

Click on the "Logout" ④ button to log out from the current web server session. The web server can only be accessed by logging in again.

You can download the license information of the PSU 8600 system using the "License information" ③ button.

Grayed out menus

When SITOP PSU8600 was assigned a SIMATIC S7 control system as IO device, then the web server is in the read-only mode. The following applies in the read-only mode:

- Parameters cannot be write accessed. Parameters can only be read (input values are grayed out).
- The firmware can still be updated.
- It is still possible to save and delete the alarm list.

7.5.3 Functions of the web server

The functions of the web server are split up between the two menus "Diagnostics" and "HW Configuration". Use the "Download to device" function to load changes that you have made to the device, see Loading the configuration (commissioning) (Page 166).

Diagnostics

You can find the following submenus here:

- Alarms, for an overview of past and active alarms, see Alarms (Page 167).
- Operating data, for an overview of operating data, see Operating data (Page 169).
- Online functions, with the options:
  - Switch output on/off
  - Buffering on/off (only if there is a minimum of 1 buffer module available in the system)
  - Firmware update
  - Reset system
  - Restoring the factory setting

For the online functions, see Online functions (Page 170).

HW configuration

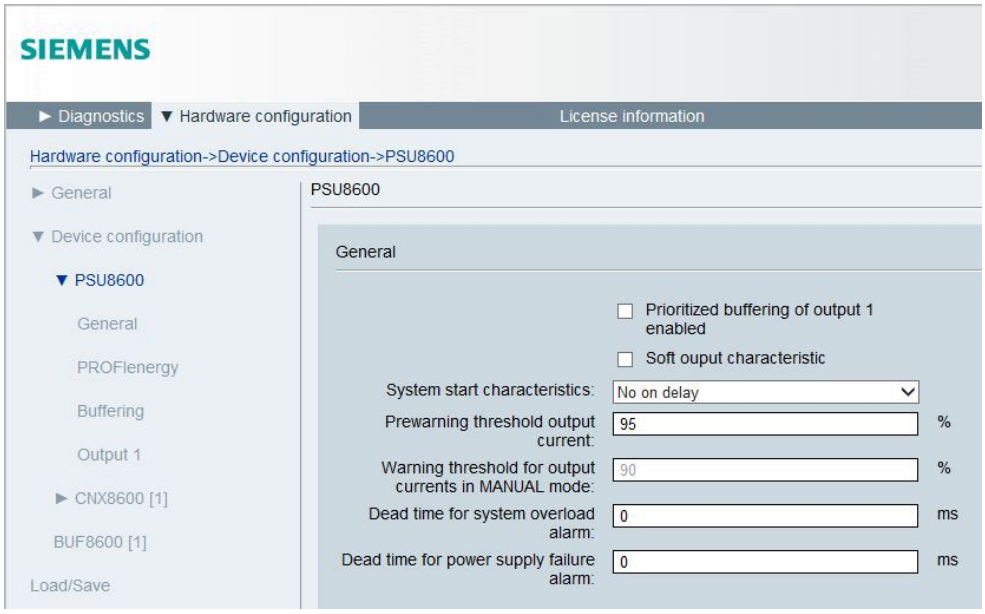

Here, in the following areas you can make changes:

- Configuring the PROFINET interface, see Configuring the PROFINET interface (Page 175).
- Change web server settings, see Web server settings / user administration (Page 177)
- User administration see Web server settings / user administration (Page 177)
- Configuring the basic device SITOP PSU8600 and the expansion modules, see Configuring SITOP PSU8600 (Page 179).

Further, you can save the configurations and load the existing configurations into the device, see Loading and saving configurations (Page 187).

7.5.4 Loading the configuration (commissioning)

You can download the actual configuration from the web server directly to the device using the "Download to device" button.



Procedure for saving the configuration

1. Click on the "OK" button to load the configuration.
2. Acknowledge the confirmation prompt.

7.5.5 Diagnostics

7.5.5.1 Alarms

The SITOP PSU8600 system internally saves a total of 1024 alarm entries. Of these, there are a maximum of the last 256 entries in the web, sorted according to time of display, whereby using the severity filter the list can be restricted to the following severities.

- NORMAL/INFO
- MAINTENANCE REQUIRED
- MAINTENANCE DEMANDED
- DIAGNOSIS

The list of alarms is saved to a CSV file by pressing "Save under".

Proceed as follows to display the active alarms or the alarm history:

1. Select menu "Diagnostics".
2. Select submenu "Alarms" and the required entry.

Active alarms

The currently active system alarms are provided in this list.

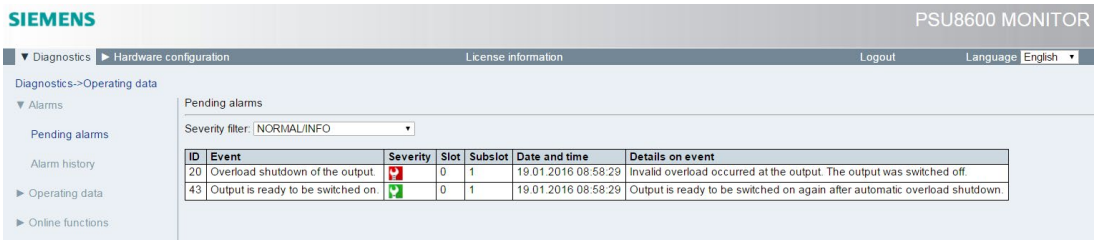

Alarm history

The alarm history is provided in this list.

Note: After a system restart, the last 50 open alarms before the restart are displayed (separated by "Reboot"). When the power is interrupted for a longer period of time, the date and time of the alarm entries can be lost, whereby the alarm sequence is retained.

The alarm list is completely deleted by pressing "Clear history".

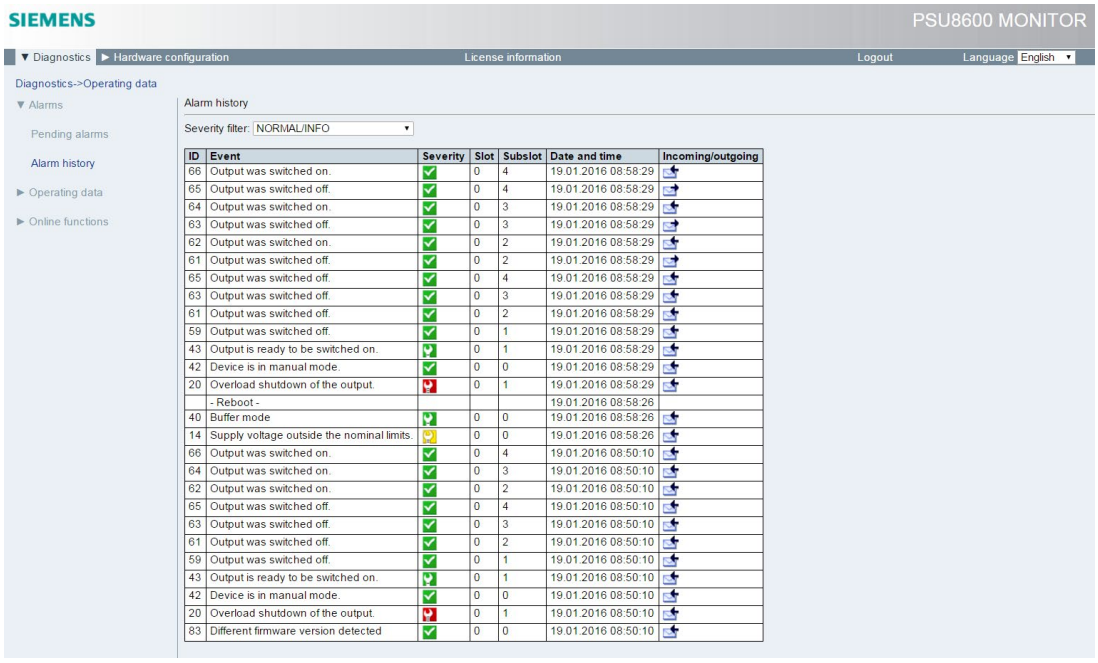

ID	Event	Severity	Slot	Subslot	Date and time	Incoming/outgoing
66	Output was switched on.		0	4	19.01.2016 08:58:29	
65	Output was switched off.		0	4	19.01.2016 08:58:29	
64	Output was switched on.		0	3	19.01.2016 08:58:29	
63	Output was switched off.		0	3	19.01.2016 08:58:29	
62	Output was switched on.		0	2	19.01.2016 08:58:29	
61	Output was switched off.		0	2	19.01.2016 08:58:29	
65	Output was switched off.		0	4	19.01.2016 08:58:29	
63	Output was switched off.		0	3	19.01.2016 08:58:29	
61	Output was switched off.		0	2	19.01.2016 08:58:29	
59	Output was switched off.		0	1	19.01.2016 08:58:29	
43	Output is ready to be switched on.		0	1	19.01.2016 08:58:29	
42	Device is in manual mode.		0	0	19.01.2016 08:58:29	
20	Overload shutdown of the output.		0	1	19.01.2016 08:58:29	
	- Reboot -				19.01.2016 08:58:26	
40	Buffer mode		0	0	19.01.2016 08:58:26	
14	Supply voltage outside the nominal limits.		0	0	19.01.2016 08:58:26	
66	Output was switched on.		0	4	19.01.2016 08:50:10	
64	Output was switched on.		0	3	19.01.2016 08:50:10	
62	Output was switched on.		0	2	19.01.2016 08:50:10	
65	Output was switched off.		0	4	19.01.2016 08:50:10	
63	Output was switched off.		0	3	19.01.2016 08:50:10	
61	Output was switched off.		0	2	19.01.2016 08:50:10	
59	Output was switched off.		0	1	19.01.2016 08:50:10	
43	Output is ready to be switched on.		0	1	19.01.2016 08:50:10	
42	Device is in manual mode.		0	0	19.01.2016 08:50:10	
20	Overload shutdown of the output.		0	1	19.01.2016 08:50:10	
83	Different firmware version detected		0	0	19.01.2016 08:50:10	

7.5.5.2 Operating data

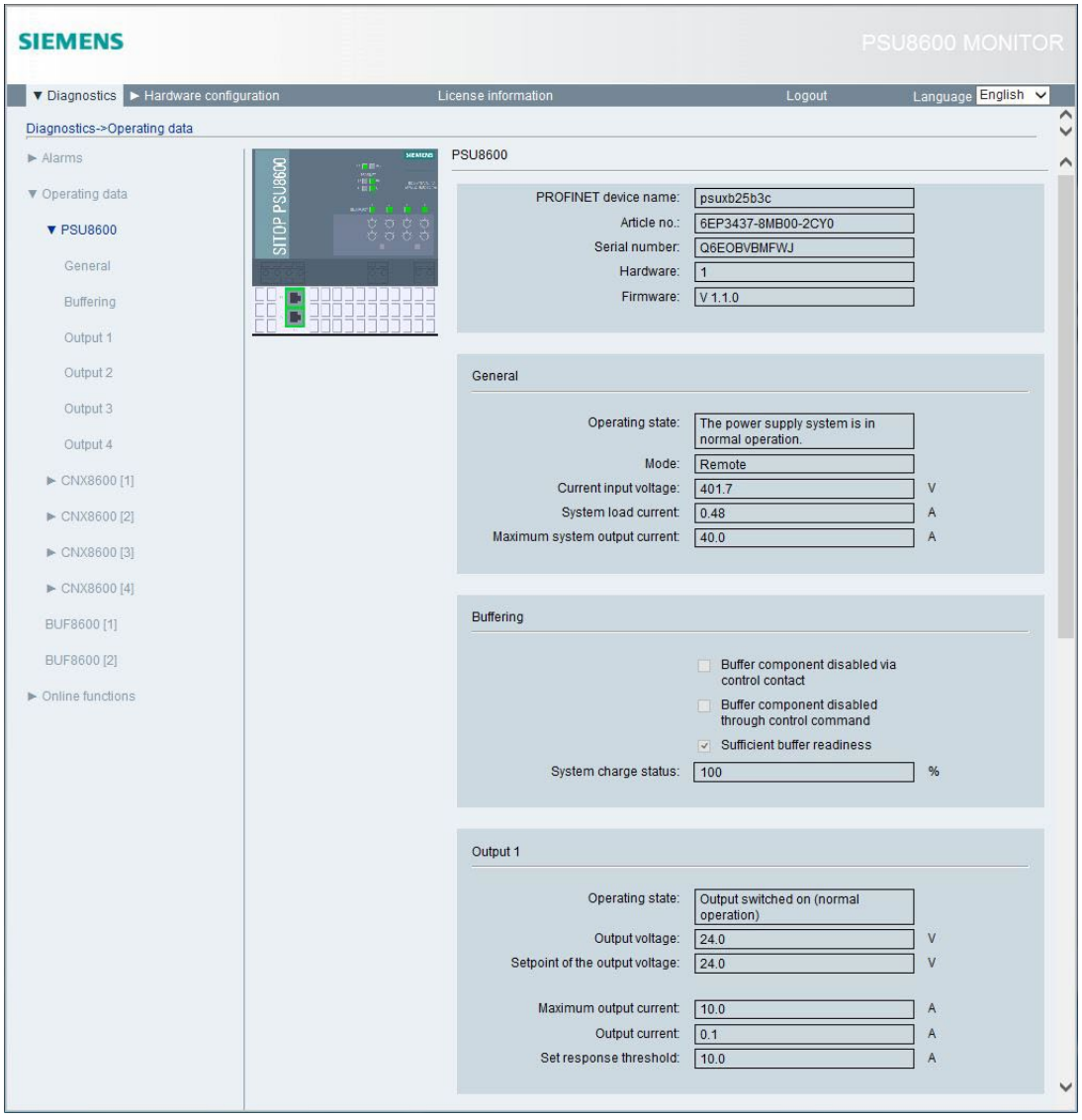

The following operating data are displayed via the web server:

Submenu	Entries	Data
PSU8600	PROFINET device name	Device name in PROFINET
	Article No.	Article number
	Serial number	Serial number
	Hardware	Hardware version
	Firmware	Firmware version
	General	Operating state
		Mode
		Actual input voltage
		System load current

Submenu	Entries	Data
		Maximum output output current
	Buffering (if there is at least 1 buffer module in the system, the menu scope depends on the BUF type)	Buffer component deactivated via control contact (only BUF 4 s/10 s)
		Buffer component disabled through control command (all BUF)
		Sufficient buffer readiness (only BUF 4 s/10 s)
		System load state (only BUF 4 s/10 s)
CNX8600	Article No.	Article number
	Serial number	Serial number
	Hardware	Hardware version
	Firmware	Firmware version
	General	Operating state
PSU8600 / CNX8600	Values of the outputs	Switch on output
		Setpoint of the output voltage
		Response threshold of the output current
		Response threshold of the output current
		Mode
		On delay

7.5.5.3 Online functions

The procedure to use the online functions of the web server is described below..

Note

With the exception of the firmware update function, all online functions for the existing PROFINET connection are inhibited.

Firmware update

The firmware update process is described in detail in the "Firmware update readme", which is provided with the firmware update download package. Please follow the instructions provided there very carefully. The files for updating the firmware are available online at: (https://support.industry.siemens.com/cs/ww/en/view/102295547)

Reset system

The PSU8600 can be reset using the "Reset system" function. "Reset system" has the following effects:

- All outputs (basic device and expansion modules) are briefly shut off
- Buffering is briefly deactivated

The system starts up again after the system is reset. All supplementary modules are internally addressed, the system configuration checked and the PROFINET connection to the control reestablished.

Using a system reset, it is not possible to switch-on outputs again after an automatic shutdown. Only outputs that were switched off after a firmware update are switched-on again.

Procedure

1. Select menu "Diagnostics".
2. Select submenu "Online functions".
3. Select the "Reset system" entry.
4. In the editor area, click on "Reset system".
5. Acknowledge the confirmation prompt with "OK".

Reset to factory settings

A reset to the factory settings deletes all hardware and software configurations stored in the SITOP PSU8600 and restores the factory settings.

This affects, for example:

- IP address
- Device name
- Parameter values for the SITOP PSU8600 and assigned supplementary modules.

Procedure

1. Select menu "Diagnostics".
2. Select submenu "Online functions".

3. Select entry "Reset to factory setting".

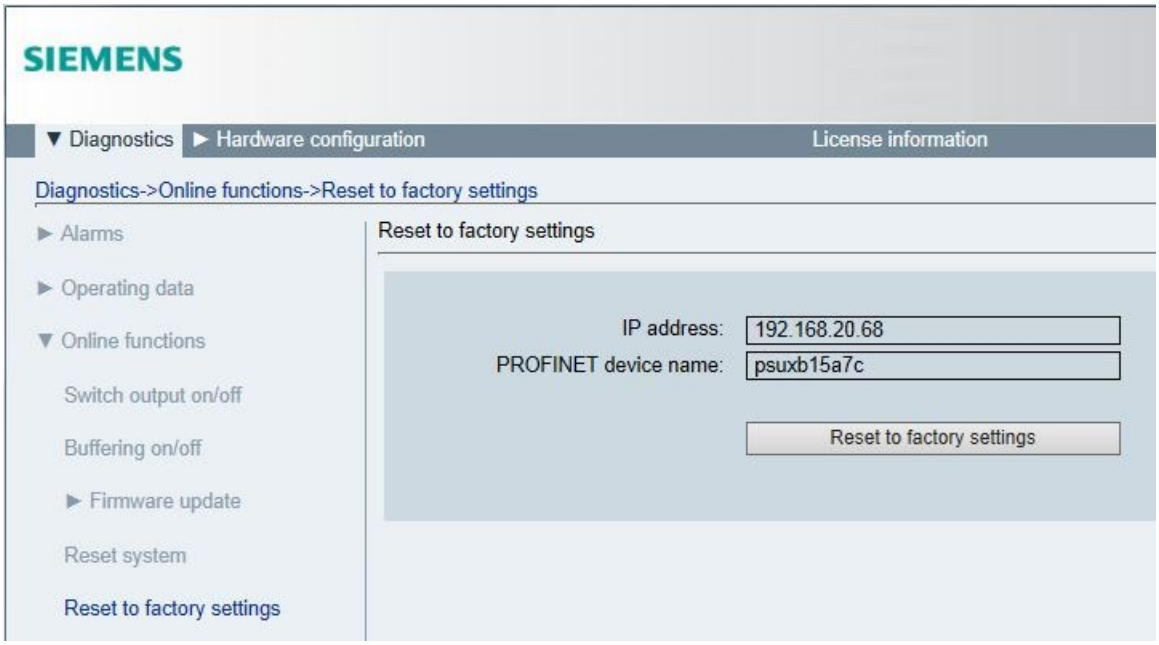

4. In the editor area, click on "Reset to factory settings".
5. Acknowledge the confirmation prompt with "OK".

Reset outputs

After an automatic shutdown, you can switch the outputs on again using the "Reset outputs" function. Outputs that were switched off manually or using the remote configuration are not switched on using the "Reset the outputs" function.

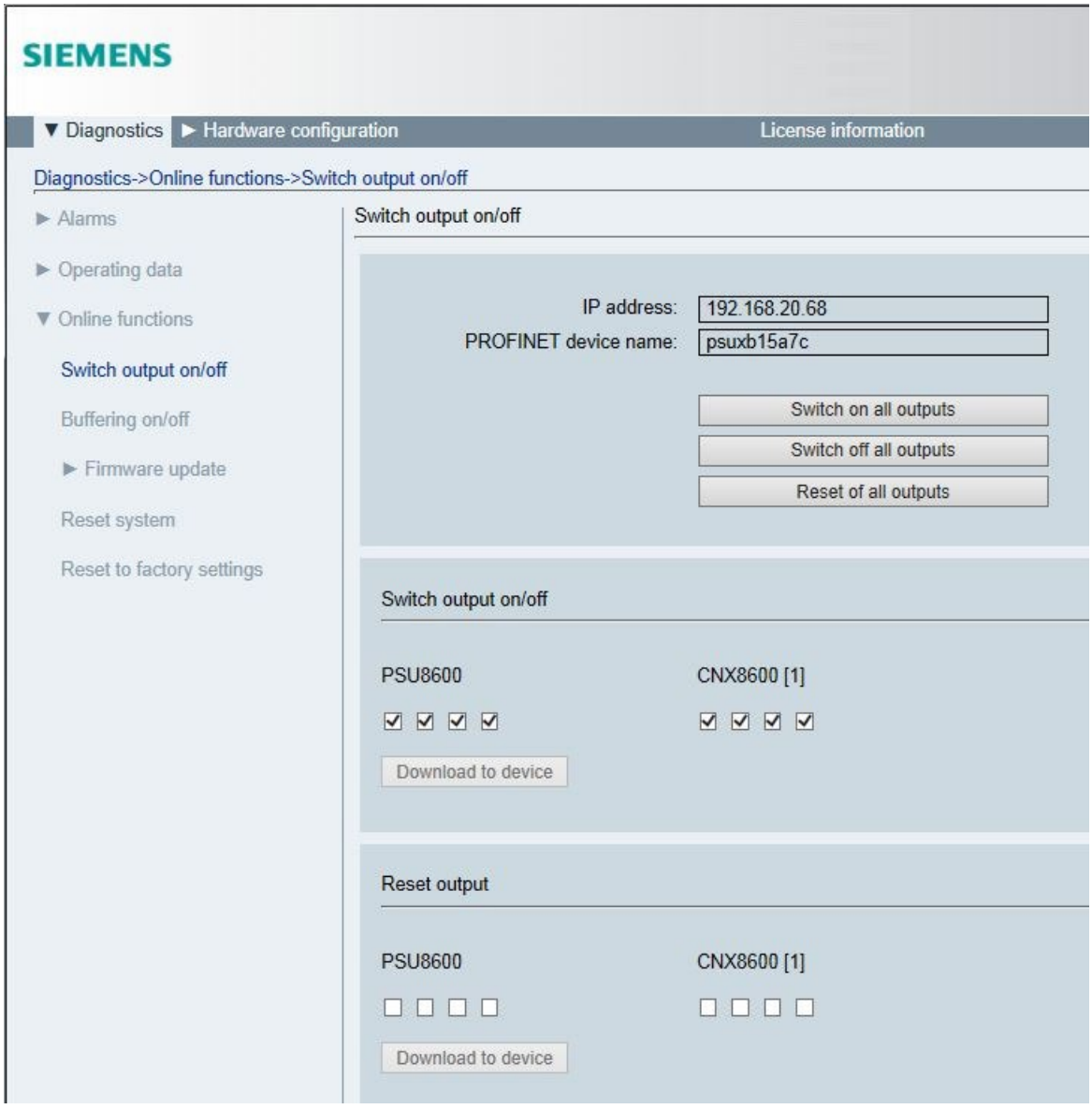

Procedure

1. Select menu "Diagnostics".
2. Select submenu "Online functions".
3. Select the "Switch output on/off" entry.
4. In the editor area, click on "Reset of all outputs".
5. Acknowledge the confirmation prompt with "OK".

Outputs off/on

Via the web server, you have the option of switching-in individual outputs or resetting all outputs.

Procedure

1. Select menu "Diagnostics".
2. Select submenu "Online functions".
3. Select the "Switch outputs on/off" entry.
4. Activate the option for each output that you wish to switch on.
5. If you wish to reset all outputs, click on the "Reset all outputs" button.

7.5.6 HW configuration

System synchronization

Note

If modules are added or removed, the system must always be synchronized before parameters are changed.

You can carry out the following synchronization operations in the system.

- **Synchronize device configuration**
  Using function "Transfer MANUAL configuration to REMOTE configuration" (synchronize configuration) you load the hardware configuration of all installed devices into the REMOTE configuration of the system.
- **Synchronize device configuration**
  With function "Transfer MANUAL configuration to REMOTE configuration" (MANUAL >> REMOTE) you load the parameterization (potentiometer and switch settings) of all installed devices into the REMOTE configuration of the system.

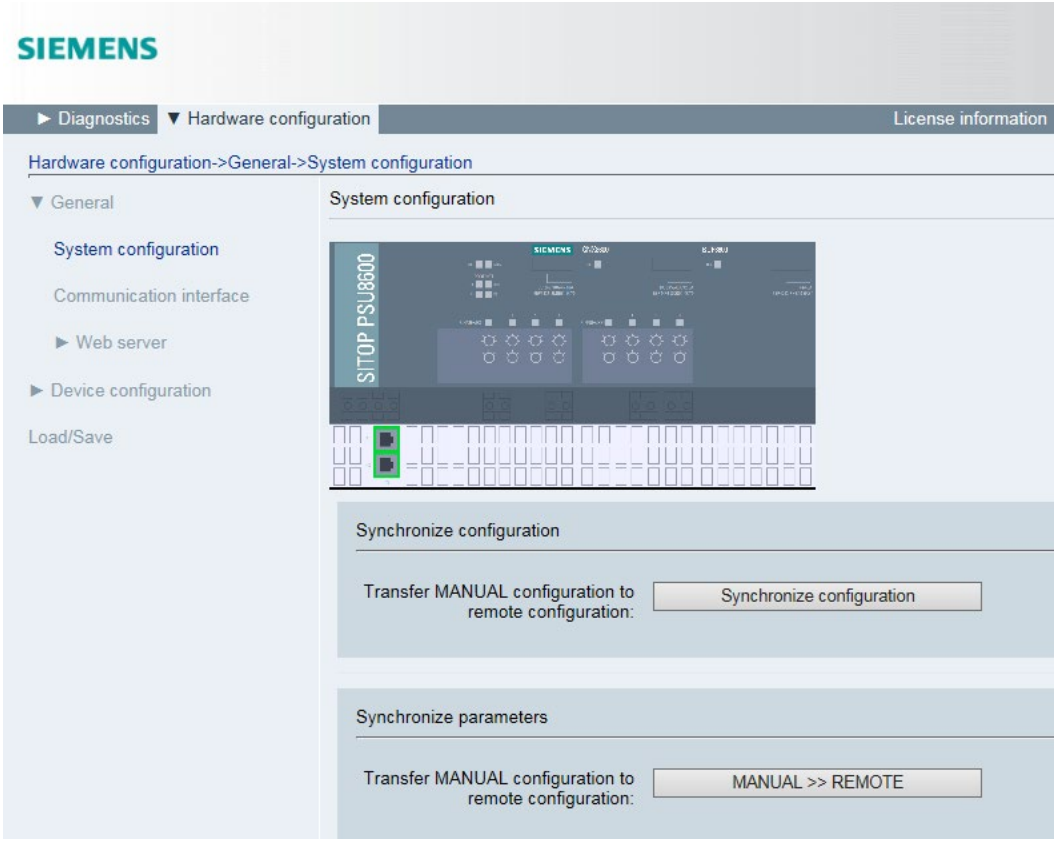

Procedure

1. Select the "Hardware configuration" menu.
2. Select submenu "General".
3. Select the "System configuration" entry.
4. To transfer the actual system expansion stage, in the editor area, click on "Synchronize configuration".
5. To transfer potentiometer and switch settings into the web server, in the editor area, click on "MANUAL >> REMOTE".
6. The system is synchronized.

7.5.6.1 Configuring the PROFINET interface

You have the option of configuring the PROFINET interface regarding the following points:

- General I&M (identification & maintenance)
  - Define the location ID
  - Define the contact
  - Define the device name
- Define whether the IP address is dynamically assigned (activate DHCP) or whether it should be fixed.

PROFINET interface

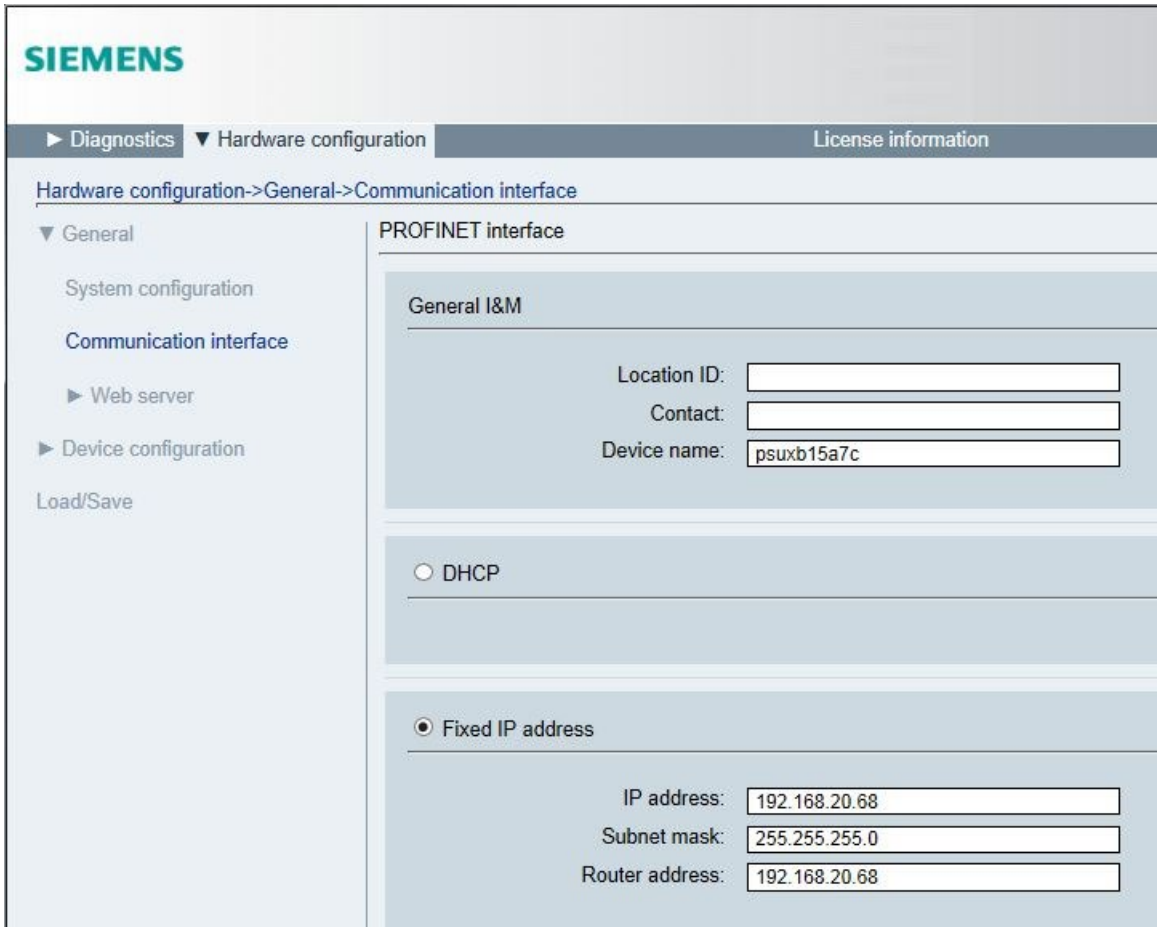

Procedure

1. Select the "Hardware configuration" menu.
2. Select submenu "General".
3. Select the "Communication interface" entry.
4. In the editor area, under "Device name" enter the required device name.
5. To dynamically assign the IP address: Activate checkbox "Source IP address via DHCP".
6. To assign a fixed IP address: Activate checkbox "Fixed IP address" and enter the appropriate parameters in the editor area.
7. Load the data to the device, see Loading the configuration (commissioning) (Page 166).

7.5.6.2 Web server settings / user administration

Here, you can make general settings and define which actions should be automatically executed. User administration is also located here.

Settings

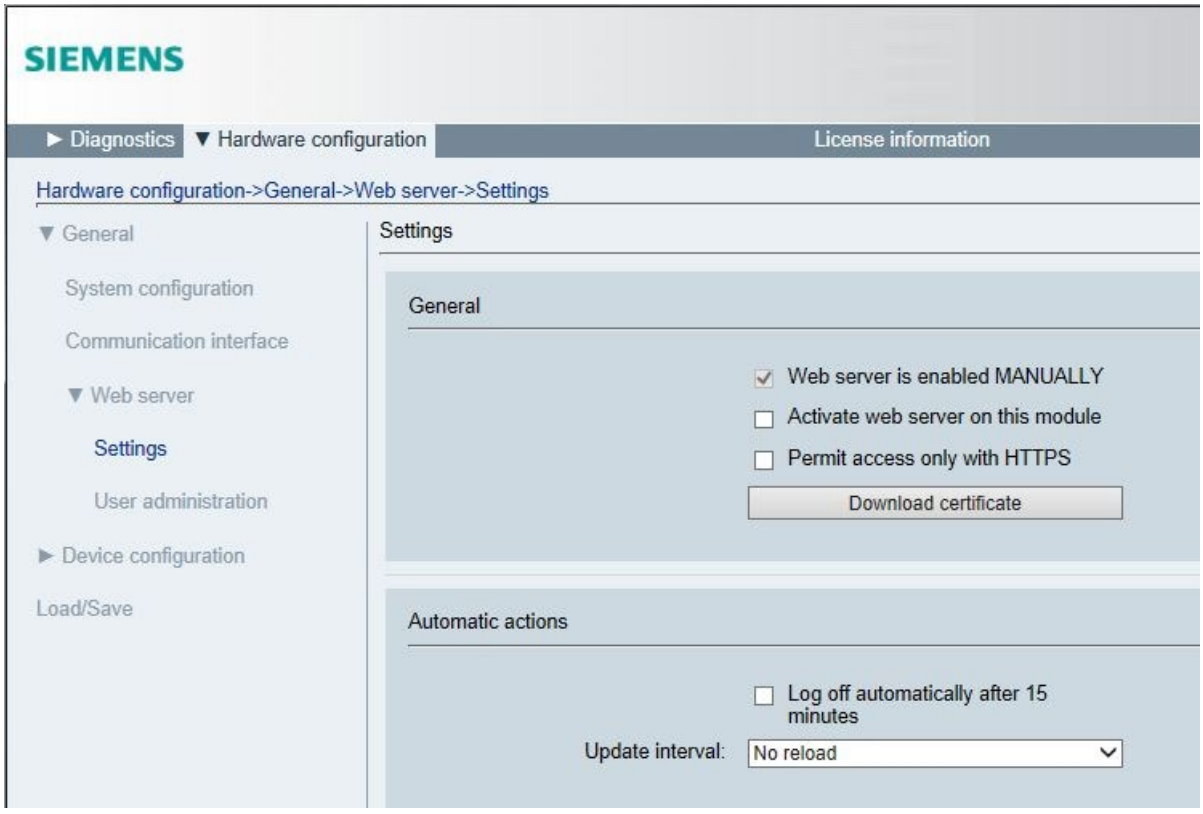

Parameters	Value range	Default setting
Web server is enabled MANUALLY	Yes/no	No
Activate web server on this module	Yes/no	No
Permit access only with HTTPS	Yes/no	Yes
Log off automatically after 15 minutes	Yes/no	No
Update interval	0 / 5 s / 10 s / 20 s / 30 s / 60 s	10 s

- **Web server is enabled MANUALLY**

  Define whether the DIP switch settings WEN ⑪ (see ChapterActivating the web server on the module (Page 71)) should be displayed.

- **Activate web server on this module**

  Define as to whether the device may be accessed via the web server.

- **Permit access only with HTTPS**

  Define whether access is only permissible via HTTPS.

- **Download certificate**

  You can download the certificate for encrypted connection via HTTPS by pressing the "Download certificate" button.

- **Log off automatically after 15 minutes**

  Define whether a user should be automatically logged off after closing the web server.

- **Update interval**

  Define the interval in which the actual values are sent to the web server.

Procedure for changing the administrator password

1. Select the "Hardware configuration" menu.
2. Select submenu "General > Communication interface > Web server".
3. Select entry "Settings".
4. Make the required settings and carry out the appropriate actions in the editor area.
5. Load the data to the device, see Loading the configuration (commissioning) (Page 166).

User administration

Here, you can change the administrator password and set up the system so that guests can access the system - and up to 14 additional user accounts with different authorization levels.

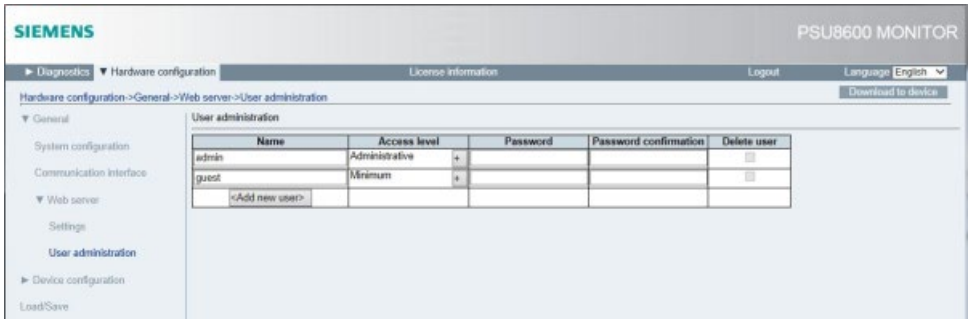

Procedure for changing the administrator password

1. Select the "Hardware configuration" menu.
2. Select submenu "General > Communication interface > Web server".
3. Select entry "User administration".
4. In the editor area, under "Administrator" enter the current administrator password.
5. In the editor area, under "Password" enter a new password.
6. Repeat the new password.
7. Load the data to the device, see Loading the configuration (commissioning) (Page 166).

Procedure for setting up a guest access

1. Select the "Hardware configuration" menu.
2. Select submenu "General > Communication interface > Web server".
3. Select entry "User administration".
4. In the editor area under "Add new user" enter the password and select the individual access rights for a new user.

Procedure for setting up a user account

1. Select the "Hardware configuration" menu.
2. Select submenu "General > Communication interface > Web server".
3. Select entry "User administration".
4. In the editor area under "Add new user" enter the password and select the individual access rights for a new user.

7.5.6.3 Configuring SITOP PSU8600

You can change the following settings for the SITOP PSU8600 via the web server:

- Under "General"
  - Prioritized buffering of output 1 enabled
  - Soft output characteristic
  - System start characteristics
  - Prewarning threshold output current
  - Prewarning threshold output currents in the MANUAL mode
  - Dead time for system overload alarm
  - Dead time for power supply failure alarm
- Under "PROFIenergy" you can activate and configure energy management with PROFIenergy.
- Under "Buffering" you can change parameter settings and buffering properties.
- You can configure the outputs under "Output 1".

Settings under "General" and "PROFIenergy"

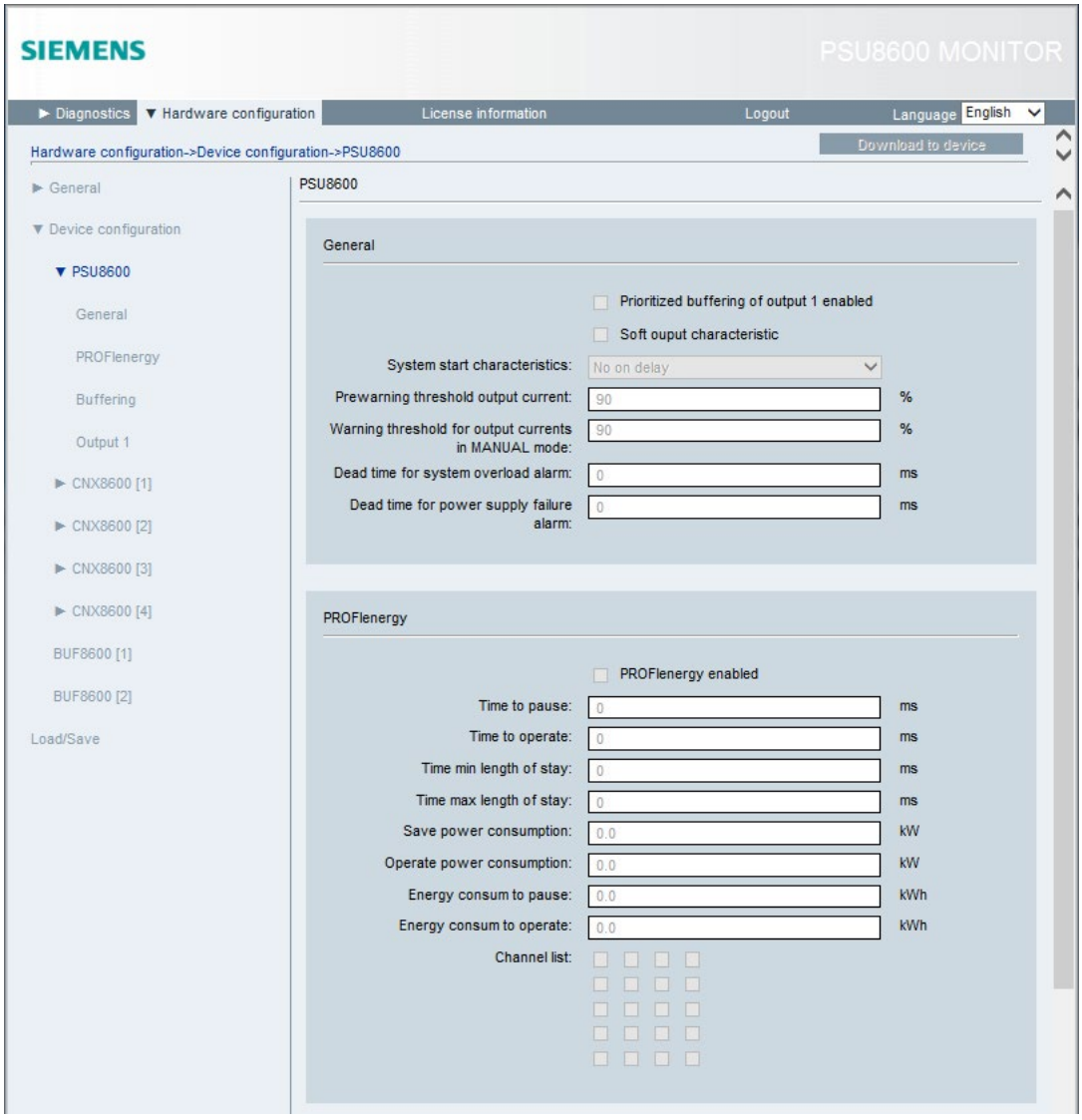

Parameters, general

Parameters	Value range	Default setting
Prioritized buffering of output 1	Yes/no	No
Soft output characteristic	Yes/no	No
System start characteristics	• No on delay • 25 ms on delay • 100 ms on delay • Load-optimized on delay • Variable on delay	No on delay

Parameters	Value range	Default setting
Prewarning threshold output current	0 - 100 %	90 %
Prewarning threshold output current in the MANUAL mode	0 - 100 %	90 %
Dead time for system overload alarm	0 - 60000 ms	5000 ms
Dead time for power supply failure alarm	0 - 1000 ms	0 ms

- **Prioritized buffering of output 1**

  When the power fails, output 1 of the basic device can be prioritized so that it is still supplied.

  Prioritizing output 1 means that the longest possible buffer time is ensured for this output. If output 1 is prioritized, all of the remaining outputs are shut down at approximately half of the nominally available buffer time for the remaining duration of the power failure. LEDs "ON/OFF/RST" of the outputs that have been shut down are lit red.

  Outputs 2 ... n, which are shut down when the power fails as output 1 has priority, are automatically switched-on again when the line supply returns.

  For the basic device, the typical buffer time is 15 ms, additional buffer modules extend the buffer time.

- **Soft output characteristic**

  The output voltage decreases with increasing output current. This means that for full output current the highest output voltage can normally no longer be attained.

- **System start characteristics**

  In order to reduce the load on the overall SITOP PSU8600 power supply system as a result of simultaneous switch-on current peaks of the loads at the various outputs, an on delay between the outputs can be selected when switching on.

  When the on delay is activated, the outputs are sequentially switched-on with a 25 ms or 100 ms delay time between the outputs, or load optimized.

  When the variable on delay is activated, you can assign individual on delay times to the individual outputs.

- **Prewarning threshold output current**

  When changes are made, the prewarning threshold for the summed current allows you to quickly check the utilization of the overall system. This is especially of interest when expanding the system. As a consequence, using the prewarning threshold increases the operational reliability.
  Enter a value of "0 %" to deactivate the prewarning threshold.

- **Prewarning threshold output current in the MANUAL mode**

  Here, it is possible to define a common threshold value for all outputs, above which an alarm is output.
  Enter a value of "0 %" to deactivate the prewarning threshold.

- **Dead time for system overload alarm**

  A system overload alarm is only initiated if a continuous system overload occurs, which is longer than the set dead time.

- **Dead time for power supply failure alarm**

  A buffer operation alarm is only initiated if the power continuously fails for a time that is longer than the set dead time.

PROFIenergy parameters

Parameters	Value range	Default setting
Enable PROFIenergy on this device	Yes/no	No
Time to pause	0 - 2147483647	0 ms
Time to operate	0 - 2147483647	0 ms
Time min length of stay	0 - 2147483647	0 ms
Time max length of stay	0 - 2147483647	0 ms
Save power consumption	0.000 - 100000.000	0.00 kW
Operate power consumption	0.000 - 100000.000	0.00 kW
Energy consum to pause	0.000 - 100000.000	0.00 kWh
Energy consum to operate	0.000 - 100000.000	0.00 kWh

Procedure

1. Select the "Hardware configuration" menu.
2. Select submenu "Device configuration".
3. Select entry "PSU8600".
4. Make the required settings in the editor area.
5. Load the data to the device, see Loading the configuration (commissioning) (Page 166).

You can find additional information on configuring the outputs in Chapter Operator control at the device (Page 51).

Settings under "Buffering" and "output"

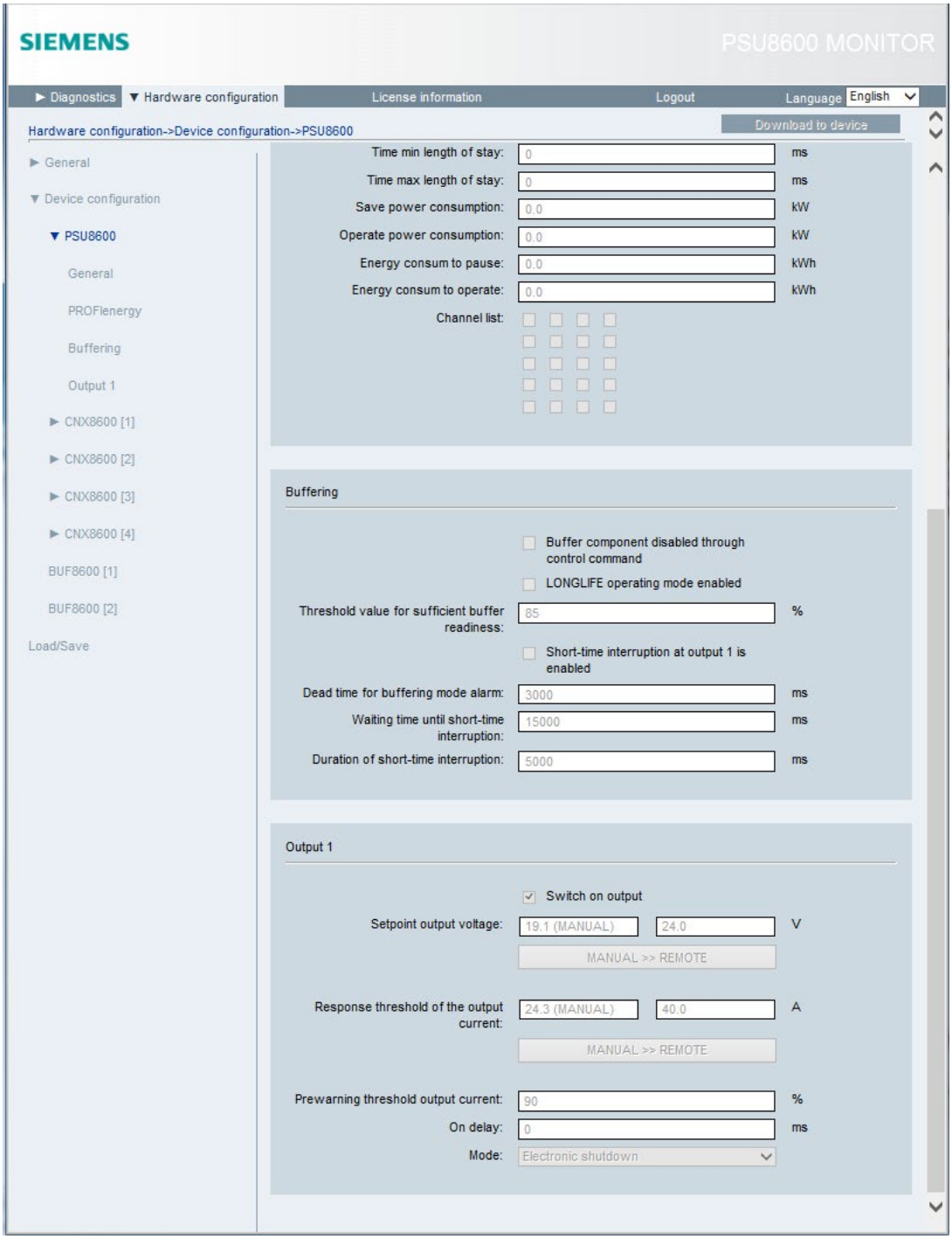

Buffering parameters

Parameters	Value range	Default setting
Buffer component disabled via control command	Yes/no	No
Enable LONGLIFE operating mode	Yes/no	No
Threshold value for sufficient buffer readiness	10 - 90 %	85 %
Short time interruption at output 1 is enabled	Yes/no	No
Dead time for buffering mode alarm	0 - 60 000 ms	3 000 ms
Wait time up to short time interruption	0 - 300 000 ms	15 000 ms
Duration of the short time interruption	0 - 60 000 ms	5 000 ms

Examples for conversion

ms (milliseconds)	s (seconds)	m (minutes)
3 000	3	
5 000	5	
15 000	15	¼
60 000	60	1
300 000	300	5

- **Buffer component disabled via control command**

  Buffer modules with double-layer capacitors can be deactivated using a control command. If the parameters are to be activated, then **all** of the buffer components in the system are deactivated. System buffering using buffer components is therefore deactivated; this function can be used for smoothly commissioning the system.

  Note

  Deactivation via control command is independent of deactivation via control contact, and further, has the same priority as deactivation using the control contact. This means that both options to activate the buffer components (control command and control contact) must be set at the same time (this corresponds to the default setting), in order to allow the system to be buffered.

The following parameters are only visible if at least one BUF8600 4 s/40 A or BUF8600 10 s/40 A module is installed.

- **Enable LONGLIFE operating mode**
- In order to increase the service life of the buffer modules with double-layer capacitors, these can be operated in the "LONGLIFE" mode with reduced buffer capacity. When the buffer module is completely charged, power failures of up to a maximum of 3 s (6EP4293-8HB00-0XY0) or up to a maximum of 8 s (6EP4295-8HB00-0XY0) can be buffered with a load current of 40 A.

- **Threshold value for sufficient buffer readiness**

  The charge state of the buffer components in the system can be interrogated using the threshold value. The value as a percentage refers to the maximum amount of energy that can be stored; for several buffer components in the system, the sum of the maximum amounts of energy that can be stored. This means that it can be ensured that a process is only started if sufficient buffer energy is available to buffer a possible power failure.

- **Short-time interruption at output 1 is enabled**

  If the function is activated, then when the power supply returns during buffer operation, the voltage at output 1 is interrupted for a time that can be parameterized. This can be used to automatically restart a PC, which was run down after the start of buffer operation to back up data, when the power returns.

- **Dead time for buffering mode alarm**

  Using the parameter, the time is defined that must elapse until after the start of buffer operation an alarm message "Buffer operation" is output. This means that very short power failures can be easily buffered, and the alarm message suppressed. For power failures that last for a longer period of time, the alarm message can then be used to initiate other specific measures, for example, safely running down a PC.

- **Waiting time until short-time interruption**

  The parameter is used to define the minimum time that must elapse after the "Buffer operation" alarm message, before the output voltage at output 1 is interrupted when the power supply returns during buffer operation. For instance, this can be the time that a PC requires to safely run down.

- **Duration of short-time interruption**

  The parameter is used to define the time for which output 1 is interrupted during buffer operation when the power returns (for example to restart a PC after it has been run down).

Output parameters

Parameters	Value range	Default setting
Switch on output	Yes/no	Yes
Setpoint output voltage	4 - 28 V	24.0 V
Response threshold of the output current	0 - 10 A or 0 - 5 A	10 A or 5 A
Prewarning threshold output current	0 - 100 %	90 %
Switch on delay	Variable	Dependent on the settings in the basic device
Mode	ELECTRONIC SHUTDOWN / CONSTANT CURRENT	ELECTRONIC SHUTDOWN

- **Switch on output**

  Here, you specify whether the output is switched on.

- **Setpoint output voltage**

  Define the required output voltage.

  Using the "MANUAL >> REMOTE" button you load the value set using the potentiometer at the front of the device into the REMOTE configuration of the system. If the button is grayed out, this means that there is a connection to a control system.

- **Response threshold of the output current**

  Define the required response threshold value of the output current for the particular output.

  Using the "MANUAL >> REMOTE" button you load the value set using the potentiometer at the front of the device into the REMOTE configuration of the system. If the button is grayed out, this means that there is a connection to a control system.

- **Prewarning threshold output current**

  Using prewarning thresholds for the output current of the individual outputs, you can identify at an early stage slight (creeping) changes in the current demand of the connected load. This prewarning function facilitates the highest possible availability of the system (maintenance function).
  Enter a value of "0 %" to deactivate the prewarning threshold.

- **Switch on delay**

  In order to reduce the load on the overall SITOP PSU8600 power supply system as a result of simultaneous switch-on current peaks of the loads at the various outputs, an on delay between the outputs can be selected when switching on.

  When the on delay is activated, the outputs are sequentially switched-on with a 25 ms or 100 ms delay time between the outputs, or load optimized.

  When the variable on delay is activated, you can assign individual on delay times to the individual outputs.

- **Mode**

  Two overload responses can be defined for all outputs:

  – In the ELECTRONIC SHUTDOWN mode, overload is permitted for a defined time. The output is electronically shut down after the limit value has been exceeded (see Overload shutdown and carrying out a reset (Page 56)).

  – In the CONSTANT CURRENT mode, an overload current is continually permissible (U/I curve) according to a defined characteristic. The overload current is limited to a maximum of 150 % of the setting value of the current potentiometer for a duration of 5 seconds (LED "ON/OFF/RST" flashes green with 2 Hz); the current is then limited to 100 % of the setting value (LED "ON/OFF/RST" flashes green with 1 Hz) as long as there is an overload condition.

You can find additional information on configuring the outputs in Chapter Operator control at the device (Page 51).

Procedure

1. Select the "Hardware configuration" menu.
2. Select submenu "Device configuration".
3. Select the entry of the required "PSU8600".
4. Make the required settings in the editor area.
5. Load the data to the device, seeLoading the configuration (commissioning) (Page 166).

7.5.6.4 Loading and saving configurations

Configurations made in the web server can be saved as zip file. Saved configurations can be loaded back to the web server.

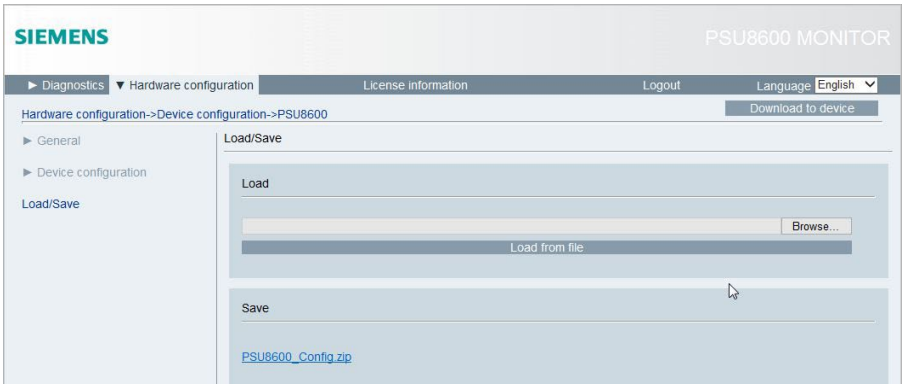

Procedure for saving the configuration

1. Select the "Hardware configuration" menu.
2. Select submenu "Load/Save".
3. The zip file now displayed can be saved as a file using the "Save target as" function of the shortcut menu (call by pressing the right-hand mouse key).
4. Enter a file name.
5. Click on "OK" to save the configuration as zip file.

Procedure for loading the configuration

1. Select the "Hardware configuration" menu.
2. Select submenu "Load/Save".
3. In the editor area, click on "Browse", and in the file dialog, select the path where the configuration file should be saved.
4. Click on the "OK" button to load the configuration.

7.6 Cyclic and acyclic data

The data communicated between the power supply system and the PROFINET IO-Controller can be viewed in the STEP 7 or STEP 7 in the TIA Portal. Here, a distinction is made between cyclic data (input/output data) and acyclic data (reading/writing data sets).

Cyclic data (input/output data)

The SITOP PSU8600, the expansion modules and the buffer modules send data - in cyclic intervals (5 ms to 128 ms) - about the actual operating states to the PROFINET IO-Controller. Further, value changes from the PROFINET IO-Controller can be transferred to the SITOP PSU8600 in cyclic intervals (5 ms to 128 ms) . Additional information on this topic is available under Input data (Page 189) and Output data (Page 191).

Secondary conditions relating to actual values:

Actual values from the device are updated via the cyclic input data of the control **within 10 ms**, **if** one of the following conditions are satisfied:

- for an output voltage change at the basic device> 0.5 V
- for an output voltage change at the expansion modules > 1 V
- for an output current change at the basic device > 0.5 A
- for an output current change at the expansion modules > 1 A

The actual values are updated every **200 ms**, if **none**of the conditions listed above are satisfied.

Secondary conditions relating to setpoint values:

Setpoints, which are transferred via the cyclic output data of the control to the device, are active**within 10 ms**.
Exception: output voltage setpoint changes < 150 mV only become active after **100 ms** aktiv.

Acyclic data (reading/writing data sets)

Reading and writing data sets (maximum size: 4 kB) are sent in acyclic intervals from the SITOP PSU8600, the expansion modules and the buffer modules to the PROFINET IO-Controller or from the PROFINET IO-Controller to the power supply system. You can find additional information at Reading and writing data sets (Page 196).

7.6.1 Input and output data

7.6.1.1 Input data

An overview of the input data, which is sent cyclically from the SITOP PSU8600, the expansion modules and the buffer modules to the PROFINET IO controller is shown in the following tables.

Additional information about the individual operating states is provided in the corresponding subchapters.

Input data SITOP PSU8600

Slot	Subslot	Data	Description	Data size
0	2	Fill byte(s)	-	Unsigned16
		Device input voltage [10mV]	Input voltage basic device: rms value of the power supply input voltage SITOP PSU8600.	Unsigned16
		Device output current [10mA]	System load current power supply system: Sum of the actual load currents at all outputs of the power supply system.	Unsigned16
		Device operating state	Operating state of the overall power supply system.	Unsigned8
0	3	Output voltage [10mV]	Actual voltage at the output of the power supply system.	Unsigned16
		Output current [10mA]	Actual load current at the output of the power supply system.	Unsigned16
		Operation state	Operating state at the output of the power supply system.	Unsigned8

Detailed information about the individual operating states can be found in Section Operating states SITOP PSU8600 (Page 193)

Input data SITOP CNX8600

Slot	Subslot	Data	Description	Data size
1-16	2	Module operation state	Operating state of expansion module SITOP CNX8600.	Unsigned8
		Channel1 output voltage [10mV]	Actual voltage at output 1 of the power supply system.	Unsigned16
		Channel1 output current [10mA]	Actual load current at output 1 of the power supply system.	Unsigned16
		Channel1 operation state	Operating state at output 1 of the power supply system.	Unsigned8
1-16	3	Channel2 output voltage [10mV]	Actual voltage at output 2 of the power supply system.	Unsigned16
		Channel2 output current [10mA]	Actual load current at output 2 of the power supply system.	Unsigned16

Slot	Subslot	Data	Description	Data size
		Channel2 operation state	Operating state at output 2 of the power supply system.	Unsigned8
1-16	4	Channel3 output voltage [10mV]	Actual voltage at output 3 of the power supply system.	Unsigned16
		Channel3 output current [10mA]	Actual load current at output 3 of the power supply system.	Unsigned16
		Channel3 operation state	Operating state at output 3 of the power supply system.	Unsigned8
1-16	5	Channel4 output voltage [10mV]	Actual voltage at output 4 of the power supply system.	Unsigned16
		Channel4 output current [10mA]	Actual load current at output 4 of the power supply system.	Unsigned16
		Channel4 operation state	Operating state at output 4 of the power supply system.	Unsigned8

Detailed information about the individual operating states can be found in Section Operating states SITOP CNX8600 (Page 194)

Input data SITOP BUF8600

SITOP BUF8600 100 ms/40 A and SITOP BUF8600 300 ms/40 A

Slot	Subslot	Data	Description	Data size
1-16	1	Fill byte(s)	-	Unsigned16
		Fill byte(s)	-	Unsigned16
		Fill byte(s)	-	Unsigned16
		Fill byte(s)	-	Unsigned16
		Buffer operation state	Operating state of the buffer module SITOP BUF8600.	Unsigned8

SITOP BUF8600 4 s/40 A and SITOP BUF8600 10 s/40 A

Slot	Subslot	Data	Description	Data size
1-16	1	Fill byte(s)	-	Unsigned16
		Fill byte(s)	-	Unsigned16
		Fill byte(s)	-	Unsigned16
		Fill byte(s)	-	Unsigned16
		Buffer operation state	Operating state of the buffer module SITOP BUF8600.	Unsigned8
		Charging state [0-100%]	Charge state of the buffer module SITOP BUF8600.	Unsigned8
		Buffering disabled by input [0/255]	Buffer module SITOP BUF8600 was deactivated via the control contact.	Unsigned8

Detailed information about the individual operating states can be found in Section Operating states SITOP BUF8600 (Page 195)

7.6.1.2 Output data

In the following tables you can find an overview of the output data, which is cyclically sent from the PROFINET IO-Controller to the SITOP PSU8600 and the expansion modules.

Output data SITOP PSU8600

Slot	Subslot	Data	Description	Value range	Data size
0	2	Device Reset_In	Status of input "Reset_In": This input resets all active faults and reactivates all of the outputs that are in the "Ready for restart" operating state.	0 = false, 0 <> true (default setting: false)	Unsigned8
		Device Ithreshold [1 %]	Prewarning threshold total current of the SITOP PSU8600.	0 - 100 % (default setting: 90 %)	Unsigned8
		System overload alarm threshold time [ms]	Time delay before an alarm is issued after a system overload was detected.	0 - 60 000 ms (default setting: 5 000 ms)	Unsigned16
		Main power outage alarm threshold time [ms]	Time delay before an alarm is issued after failure of the power supply voltage (power supply changes into the "Buffer mode").	0 - 60 000 ms (default setting: 0 ms)	Unsigned16
		Buffering disable	Buffer module was deactivated via control command.	0 = false, 0 <> true (default setting: false)	Unsigned8
		Data block active	Indicator: Data block contains valid data.	0 = false, 0 <> true (default setting: false)	Unsigned8
0	3	Output Utarget [10 mV]	Currently set setpoint of the output voltage.	4.0 V - 28.0 V (default setting: 24.0 V)	Unsigned16
		Output Ilimit [10 mA]	Response threshold value of the output current for the particular output. When this is exceeded, the output current is interpreted as having an overload condition and is shut down with a time delay - or limited.	Output 5 A: 0.0 A - 5.0 A (default setting: 5.0 A) Output 10 A: 0.0 A - 10 A (default setting: 10 A)	Unsigned16
		Output Ithreshold	Prewarning threshold of the configured response threshold for the output current in %. An alarm is initiated when the actual output current exceeds this value. Operation is continued without any restrictions. Prewarning is deactivated by entering "0 %".	0 - 100 % (default setting: 90 %)	Unsigned8
		Channel1 Output Enable	Switches the output on or off. A possible automatic shutdown due to overload or power failure is not taken into account.	0 = false, 0 <> true (default setting: false)	Unsigned8
		Channel1 Reset_In	Resets an overload shutdown for this output	0 = false, 0 <> true (default setting: false)	Unsigned8

Slot	Subslot	Data	Description	Value range	Data size
		Data block active	Indicator: Data block contains valid data.	0 = false, 0 <> true (default setting: false)	Unsigned8

Output data SITOP CNX8600

Slot	Subslot	Data	Description	Value range	Data size
1-6	2	Channel1 Utarget [10 mV]	Currently set setpoint of the output voltage for output 1.	4.0 V - 28.0 V (default setting: 24.0 V)	Unsigned16
		Channel1 Ilimit [10 mA]	Response threshold of the output current for output 1. When this is exceeded, the output current is interpreted as having an overload condition and is shut down with a time delay - or limited.	Output 5 A: 0.0 A - 5.0 A (default setting: 5.0 A) Output 10 A: 0.0 A - 10 A (default setting: 10 A)	Unsigned16
		Channel1 Ithreshold	Prewarning threshold of the configured response threshold for the output current in %. An alarm is initiated when the actual output current exceeds this value. Operation is continued without any restrictions. Prewarning is deactivated by entering "0 %".	0 - 100 % (default setting: 90 %)	Unsigned8
		Channel1 OutputEnable	Switches output 1 on or off. A possible automatic shutdown due to overload or power failure is not taken into account.	0 = false, 0 <> true (default setting: false)	Unsigned8
		Channel1 Reset_In	Resets an overload shutdown for this output	0 = false, 0 <> true (default setting: false)	Unsigned8
		Data block active	Indicator: Data block has valid data.	0 = false, 0 <> true (default setting: false)	Unsigned8
1-6	3	Channel2 Utarget [10 mV]	see data "Channel 1"		
		Channel2 Ilimit [10 mA]			
		Channel2 Ithreshold			
		Channel2 OutputEnable			
		Channel2 Reset_In			
		Data block active			
1-6	4	Channel3 Utarget [10 mV]	see data "Channel 1"		
		Channel3 Ilimit [10 mA]			
		Channel3 Ithreshold			
		Channel3 OutputEnable			
		Channel3 Reset_In			

Slot	Subslot	Data	Description	Value range	Data size
		Data block active			
1-6	5	Channel4 Utarget [10 mV]	see data "Channel 1"		
		Channel4 Ilimit [10 mA]			
		Channel4 Ithreshold			
		Channel4 OutputEnable			
		Channel4 Reset_In			
		Data block active			

7.6.1.3 Operating states SITOP PSU8600

Operating state of the power supply system (device operating state)

Status message	Description
0 = Off	Power supply system is switched off
1 = ErrorOff	The power supply system was automatically shut down as a result of operation under inadmissible operating conditions.
2 = CooledDown	After an automatic shutdown due to a fault, the power supply system can be reactivated by switching off and switching on the supply voltage.
3 = Boot	The power supply system is powering up, all of the outputs are still switched off.
4 = Running	The power supply system is operating in the normal mode.
5 = Phasefail	Phase failure of the supply voltage detected. The power supply system can continue to operate in the normal mode without any restrictions for a limited period of time.
6 = SystemOverload (IP)	System overload detected within the permissible overload profile. The power supply system is still operating in the normal mode.
7 = SystemOverload (OP)	System overload detected outside the permissible overload profile. Power supply system only operating with some restrictions.
8 = SystemOverload (PL)	Very high, brief load peak detected. Power supply system is operating in the normal mode.
9 = Buffering	Primary supply voltage has failed. Power supply system is operating in the buffer mode.

Output operating state

Status message	Description
0 = ManualOff	Output switched off manually (button): The output was manually switched off using the button on the device. The device can only be switched on manually using the button on the device.
1 = RemoteOff	Output switched off (PROFINET/IE): The output was remotely switched off via PROFINET/IE.
2 = BufferOff	Output switched off (prioritization output 1): The output was switched off during buffer operation.
3 = OverLoadOff	Output switched off (overload): Inadmissible overload at the output has occurred. The output was switched off.

Status message	Description
4 = ReadyForRestart	Output ready for reset (reset): Output is ready to be switched on again after automatic overload shutdown.
5 = ErrorOff	Output switched off (fault)
6 = Boot	Output switched off (powering up)
7 = Running	Output switched on (normal operation)
8 = OverLoad	Output in overload operation: The output current is above the specified response threshold, but still within the permissible overload profile.
9 = Limit	Output current limited to the response threshold: The output is in the overload mode. The output current is limited to the configured response threshold.
10 = OverloadDerate	Output in overload operation (with derating):
11 = LimitDerate	Output current limited (with derating)

7.6.1.4 Operating states SITOP CNX8600

Operating state of an expansion module (module operating state)

Status message	Description
0 = Off	Expansion module is switched off
1 = ErrorOff	The expansion module was automatically shut down as a result of operation under inadmissible operating conditions.
2 = CooledDown	After an automatic shutdown due to a fault, the expansion module can be reactivated by switching off and switching on the supply voltage.
3 = Boot	The expansion module is powering up, all of the outputs are still switched off.
4 = Running	The expansion module is operating in the normal mode.
5 = Buffering	Primary supply voltage has failed. The expansion module is operating in the buffer mode.

Operating state output 1... 4 (Channel1...4 operating state)

The status messages of an output are listed in the table below. The data applies to outputs 1 to 4.

Status message	Description
0 = ManualOff	Output switched off manually (button): The output was manually switched off using the button on the device. The device can only be switched on manually using the button on the device.
1 = RemoteOff	Output switched off (PROFINET/IE): The output was remotely switched off via PROFINET/IE.
2 = BufferOff	Output switched off (prioritization output 1): The output was switched off during buffer operation.
3 = OverLoadOff	Output switched off (overload): Inadmissible overload at the output has occurred. The output was switched off.
4 = ReadyForRestart	Output ready for reset (reset): Output is ready to be switched on again after automatic overload shutdown.
5 = ErrorOff	Output switched off (fault).

Status message	Description
6 = Boot	Output switched off (powering up).
7 = Running	Output switched on (normal operation)
8 = OverLoad	Output in overload operation: The output current is above the specified response threshold, but still within the permissible overload profile.
9 = Limit	Output current limited to the response threshold: The output is in the overload mode. The output current is limited to the configured response threshold.
10 = Overloaded AfterSystemOverload	Output in overload operation (system overload).
11 = LimitAfter SystemOverload	Output current limited (system overload).

7.6.1.5 Operating states SITOP BUF8600

Operating state of the buffer module (buffer operating state)

Status message	Description
0 = Off	Buffer component is in the "Off" operating state.
1 = Boot	Buffer component is powering up.
2 = Full	Complete buffer readiness: The energy storage device of the buffer component is fully charged (normal operation).
3 = Buffering	The buffer component is operating in the buffer mode: The power supply system is supplied via the buffer component(s).
4 = ErrorOff	Shutdown after an error: A fault/error has occurred when operating the buffer component. The buffer component is not operational and must be restarted by switching off the supply voltage and switching it on again.
5 = NotFully ChargedReady	Ready for buffer operation as the energy storage device of the buffer module has been sufficiently charged.
6 = NotFully ChargedNotReady	Not ready for buffer operation as the energy storage device of the buffer module has not been sufficiently charged and is presently being charged.

7.6.2 Reading and writing data sets

7.6.2.1 Overview of reading and writing data sets

An overview of all of the data sets, which are communicated between the power supply system and PROFINET IO-Controller, is listed in the following tables. Here, a distinction is made between the following data sets:

- **Reading data sets:** Data that is sent from the SITOP PSU8600, expansion modules and buffer modules to the PROFINET IO-Controller .
- **Writing data sets:** Data that is sent from the PROFINET IO-Controller to the SITOP PSU8600, the expansion modules and the buffer modules.

Additional information about the individual data sets is provided in the corresponding subchapters.

Reading and writing data sets SITOP PSU8600

Index	Slot	Subslot	Data set	Type	Description	Data size
1	0	1	General	Reading	General settings of the SITOP PSU8600.	10 bytes
				Writing	Adjustable parameters for generally configuring the SITOP PSU8600.	10 bytes
1	0	3	Channel1	Reading	Configuring output 1 of the SITOP PSU8600.	10 bytes
				Writing	Adjustable parameters for output 1 of the SITOP PSU8600.	10 bytes
0x0006	0	1	Device information	Reading	Information about the SITOP PSU8600.	42 bytes
0x0007	0	1	Hardware settings	Reading	Hardware settings of the SITOP PSU8600 (settings that were made at the front of the device).	42 bytes
0x0008	0	1	Buffer handling values	Reading	Configuring the buffer behavior.	14 bytes
				Writing	Adjustable parameters for the buffer behavior.	14 bytes
0x0020	0	1	State information	Reading	Status information about the SITOP PSU8600.	32 bytes
0x0021	0	1	Buffer state information	Reading	Status information about the buffer properties.	4 bytes
0x0030	0	1	PROFIenergy values	Reading	PROFIenergy settings of the SITOP PSU8600.	36 bytes
				Writing	Adjustable PROFIenergy parameters of the SITOP PSU8600.	36 bytes
0x0031	0	1	PROFIenergy channel list	Reading / writing	PROFIenergy pause configuration of the power supply system (outputs, which are switched off during a PROFIenergy pause).	4 bytes

Index	Slot	Subslot	Data set	Type	Description	Data size
0x0035	0	1	Web server	Reading	Web server settings of the SITOP PSU8600.	6 bytes
				Writing	Adjustable parameters for the web server of the SITOP PSU8600.	6 bytes
0x0040	0	1	Identification values parameters	Reading	Parameters for device identification.	108 bytes
				Writing	Adjustable parameters for device identification.	108 bytes

Detailed information about the individual data sets can be found in Section Data sets SITOP PSU8600 (Page 198)

Reading and writing data sets SITOP CNX8600

Index	Slot	Subslot	Data set	Type	Description	Data size
1	1-6	1	Channel1	Reading	Configuring output 1 of the expansion module SITOP CNX8600.	10 bytes
1	1-6	0	Channel1	Writing	Adjustable parameters for output 1 of the expansion module SITOP CNX8600	10 bytes
1	1-6	2	Channel2	Reading	Configuring output 2 of the expansion module SITOP CNX8600.	10 bytes
1	1-6	1	Channel2	Writing	Adjustable parameters for output 2 of the expansion module SITOP CNX8600	10 bytes
1	1-6	3	Channel3	Reading	Configuring output 3 of the expansion module SITOP CNX8600.	10 bytes
1	1-6	2	Channel3	Writing	Adjustable parameters for output 3 of the expansion module SITOP CNX8600	10 bytes
1	1-6	4	Channel4	Reading	Configuring output 4 of the expansion module SITOP CNX8600.	10 bytes
1	1-6	3	Channel4	Writing	Adjustable parameters for output 4 of the expansion module SITOP CNX8600	10 bytes
0x0006	1-6	1	Device information	Reading	Information about the expansion module SITOP CNX8600.	42 bytes
0x0007	1-6	1	Hardware settings	Reading	Hardware settings of the expansion module SITOP CNX8600 (settings that were made at the front of the device).	24 bytes
0x0020	1-6	1	State information	Reading	Status information about the expansion module SITOP CNX8600.	64 bytes

Detailed information about the individual data sets can be found in Section Data sets SITOP CNX8600 (Page 207)

Reading and writing data sets SITOP BUF8600

SITOP BUF8600 100 ms/40 A and SITOP BUF8600 300 ms/40 A

Index	Slot	Subslot	Data set		Description	Data size
0x0006	1-6	1	Device information	Reading	Information about the buffer components SITOP BUF8600.	42 bytes
0x0020	1-6	1	State information	Reading	Status information about the buffer components SITOP BUF8600.	14 bytes

SITOP BUF8600 4 s/40 A and SITOP BUF8600 10 s/40 A

Index	Slot	Subslot	Data set		Description	Data size
0x0006	1-6	1	Device information	Reading	Information about the buffer components SITOP BUF8600.	42 bytes
0x0020	1-6	1	State information	Reading	Status information about the buffer components SITOP BUF8600.	16 bytes

Detailed information about the individual data sets can be found in Section Data sets SITOP BUF8600 (Page 211)

7.6.2.2 Data sets SITOP PSU8600

Index 1: General (reading/writing)

Data	Description			Data type
Priority buffered Channel 1 (0/255)	Prioritized buffering of output 1 When the power fails, output 1 of the basic device can be prioritized to increase the available buffer time. In order that the remaining buffer energy is only used for output 1, in buffer operation, all of the additional outputs of the power supply system are shut down after half of the nominal buffer time that is available. When the line supply is available, the outputs that have been shut down are automatically switched-on again.			Unsigned8
Startup mode	System start characteristics: Defines the time delay when switching on the outputs after the device has powered up. For a defined switch-on delay time, the outputs are switched on in a fixed sequence 1, 2,…n with an identical delay time between the outputs. For a variable switch-on delay, each output uses an indi-	0 = StartupDelayOff	No on delay	Unsigned8
		1 = StartupDelay25ms	25 ms on delay Outputs are switched on in an ascending sequence (starting with output 1 of the basic device) in intervals of 25 ms.	
		2 = StartupDelay100ms	100 ms switch on delay Outputs are switched on in an ascending sequence (starting with output 1 of the basic device) in intervals of 100 ms.	

Data	Description			Data type
	vidually specified delay time based on a common starting point.	3 = StartupDelay LoadOptimized	Load-optimized switch on delay: Outputs are switched on in an ascending sequence (starting with output 1 of the basic device) in a load-optimized fashion.	
		4 = StartupDelay Variable	Variable switch on delay: Depending on the parameterized delay time, outputs are activated after the supply voltage is switched on.	
Soft Output Characteristics Output 1 (0/255)	Soft output characteristic of output 1 of the SITOP PSU8600 is activated.			Unsigned8
Ithreshold (0-100%)	Prewarning threshold for the actual system power, referred to the rated power of the power supply system.			Unsigned8
Reset	Reset all outputs: Resets the automatic overload shutdown of all outputs. Assuming that the outputs are not switched off elsewhere, then after the reset, they are switched on again.			Unsigned8
Fill byte(s)	-			Unsigned8
System overload alarm threshold time [ms]	Time delay before an alarm is issued after a system overload was detected.			Unsigned16
Main power outage alarm threshold time [ms]	Time delay before an alarm is issued after failure of the power supply voltage (power supply changes into the "Buffer mode").			Unsigned16

Index 1: Channel1 (reading/writing)

Data	Description	Data type
Utarget [10mV]	Currently set setpoint of the output voltage.	Unsigned16
Ilimit [10mA]	Response threshold of the output current for an output. When this is exceeded, the output current is interpreted as having an overload condition and is shut down with a time delay - or limited.	Unsigned16
Ithreshold [0-100%]	Prewarning threshold of the configured response threshold for the output current in %. An alarm is initiated when the actual output current exceeds this value. Operation is continued without any restrictions. Prewarning is deactivated by entering "0 %".	Unsigned8
OutputEnable (0/255)	Switch on output Switches the output on or off. A possible automatic shutdown due to overload or power failure is not taken into account.	Unsigned8
Reset	Resets the output: Resets the automatic overload shutdown of an output. Assuming that the output is not switched off elsewhere, then after the reset, it is switched on again.	Unsigned8

Data	Description			Data type
Operation Mode	Mode: If the actual load current of an output exceeds the specified response threshold value of the output current, then the output can be shut down according to a current-time characteristic ("electronic shutdown"), or the load current can be limited to the response threshold ("constant current").	0 = ModeSelect	Electronic shutdown: The output is shut down when the response threshold value is exceeded.	Unsigned8
		1 = ModeModular	Constant current: When the response threshold value is exceeded, the load current is limited to the response threshold until this is fallen below again.	
Startup Delay [ms]	Switch on delay Individual delay time for the output, referred to a common starting point. Only valid for system switch-on behavior "Variable on delay".			Unsigned16

Index 0x0006: Device information (reading)

Data	Description	Data type
MLFB / Order number	Article No. / Order number	VisibleString(20)
Product state	Product release	Unsigned8
Fill byte(s)	-	Unsigned8
SW version	Software version	Unsigned32
Serial number	Serial number	VisibleString(16)

Index 0x0007: Hardware settings (reading)

Data	Description	Data type
Man/remote DipSwitch (0/255)	Actual position of the operating selection switch at the basic device SITOP PSU8600: • 0 = "Manual" operation • 255 = "REMOTE" operation	Unsigned8
Priority Bufferd Channel 1 DipSwitch (0/255)	Actual switch position for prioritized buffering (PRIO) of output 1 at the basic device SITOP PSU8600.	Unsigned8
Startup Mode DipSwitch – Combination (0-3)	Actual switch position for the system switch-on behavior.	Unsigned8
Operating Mode DipSwitch (0/255)	Actual switch position for the mode of output 4 at the basic device SITOP PSU8600: • 0 = constant current • 255 = electronic shutdown	Unsigned8
Soft Output Characteristics Output 1 (0/255)	Soft output characteristic of output 1 of the SITOP PSU8600 is activated.	Unsigned8
Reserved DipSwitch 7 (0/255)	Status of the reserved (unassigned) selector switch 7.	Unsigned8

Data	Description	Data type
Webserver Enable DipSwitch (0/255)	Actual switch position for activating/deactivating the web server. • 0 = web server deactivated • 255 = web server activated	Unsigned8
Reset_In-Input (0/255)	Status of input "Reset_In": This input resets all active faults and reactivates all of the outputs that are in the "Ready for restart" operating state.	Unsigned8
Utarget Potentiometer [10mV]	Manually set setpoint of the output voltage at output 1: Setpoint of the output voltage for an output manually set using the potentiometer at the device; in normal operation, the output is controlled to this setpoint voltage.	Unsigned16
Ilimit Potentiometer [10mA]	Manually set threshold of the output current at output 1. Response threshold of the output current for an output set using the potentiometer at the device. When this is exceeded, the output current is interpreted as having an overload condition and is shut down with a time delay - or limited.	Unsigned16
Output Enable manual button (0/255)	Actual DIP switch state for output 1: • 0 = Manually shut down • 255 = Manually switched on	Unsigned8
Fill byte(s)	-	Unsigned8
ModuleIdentNumber slot0/MainUnit	Module identification number for slot 0 (basic device).	Unsigned32
ModuleIdentNumber slot 1	Module identification number for slot 1.	Unsigned32
ModuleIdentNumber slot 2	Module identification number for slot 2.	Unsigned32
ModuleIdentNumber slot 3	Module identification number for slot 3.	Unsigned32
ModuleIdentNumber slot 4	Module identification number for slot 4.	Unsigned32
ModuleIdentNumber slot 5	Module identification number for slot 5.	Unsigned32

Index 0x0008: Buffer handling values (reading/writing)

Data	Description	Data type
Buffer Disable (0/255)	Activating/deactivating buffer readiness.	Unsigned8
LongLife Mode (0/255)	Activating/deactivating the "Long Life" mode.	Unsigned8
ChargeReadyThreshold [ms]	Threshold value for sufficient buffer readiness	Unsigned16
PowerInterrupt Enable (0/255)	Activating/deactivating brief interruption of the power supply for output 1. In this case, output 1 is switched off for a defined time.	Unsigned8
Fill byte(s)	-	Unsigned8
PowerInterrupt DeadTime [ms]	Time delay with which the brief interruption of the power supply for output 1 is started.	Unsigned16
PowerInterrupt WaitTime [ms]	Time that elapses from initiating the shutdown sequence until output 1 is shut down.	Unsigned32
PowerInterrupt InterruptTime [ms]	Time for which output 1 is shut down.	Unsigned16

Index 0x0020: State information (reading)

Data	Description			Data type
Priority buffered Channel 1 (0/255)	Prioritized buffering of output 1 When the power fails, output 1 of the basic device can be prioritized to increase the available buffer time. In order that the remaining buffer energy is only used for output 1, in buffer operation, all of the additional outputs of the power supply system are shut down after half of the nominal buffer time that is available. When the line supply is available, the outputs that have been shut down are automatically switched-on again.			Unsigned8
Startup mode	System start characteristics: Defines the time delay when switching on the outputs after the device has powered up. For a defined switch-on delay time, the outputs are switched on in a fixed sequence 1, 2,…n with an identical delay time between the outputs. For a variable switch-on delay, each output uses an individually specified delay time based on a common starting point.	0 = StartupDelayOff	No on delay	Unsigned8
		1 = StartupDelay25ms	25 ms on delay Outputs are switched on in an ascending sequence (starting with output 1 of the basic device) in intervals of 25 ms.	
		2 = StartupDelay100ms	100 ms switch on delay Outputs are switched on in an ascending sequence (starting with output 1 of the basic device) in intervals of 100 ms.	
		3 = StartupDelay LoadOptimized	Load-optimized switch on delay: Outputs are switched on in an ascending sequence (starting with output 1 of the basic device) in a load-optimized fashion.	
		4 = StartupDelay Variable	Variable switch on delay: Depending on the parameterized delay time, outputs are activated after the supply voltage is switched on.	
Soft Output Characteristics Output 1 (0/255)	Soft output characteristic of output 1 of the SITOP PSU8600 is activated.			Unsigned8
Ithreshold (0-100%)	Prewarning threshold for the actual system power, referred to the rated power of the power supply system.			Unsigned8
Fill byte(s)	-			Unsigned16
Device input voltage [10mV]	Input voltage: rms value of the supply voltage at the input of the SITOP PSU8600.			Unsigned16
Device output current [10mA]	System load current: Sum of the actual load currents of all outputs of the power supply system.			Unsigned16
Device operating state	Operating state	0 = Off	Power supply system is switched off	Unsigned8
		1 = ErrorOff	The power supply system was automatically shut down as a result of operation under inadmissible operating conditions.	

Data	Description			Data type
		2 = CooledDown	After an automatic shut-down due to a fault, the power supply system can be reactivated by switching off and switching on the supply voltage.	
		3 = Boot	The power supply system is powering up, all of the outputs are still switched off.	
		4 = Running	The power supply system is operating in the normal mode.	
		5 = Phasefail	Phase failure of the supply voltage detected. The power supply system can continue to operate in the normal mode without any restrictions for a limited period of time.	
		6 = SystemOverload (IP)	System overload detected within the permissible overload profile. The power supply system is still operating in the normal mode.	
		7 = SystemOverload (OP)	System overload detected outside the permissible overload profile. Power supply system only operating with some restrictions.	
		8 = SystemOverload (PL)	Very high, brief load peak detected. Power supply system is operating in the normal mode.	
		9 = Buffering	Primary supply voltage has failed. Power supply system is operating in the buffer mode.	
Ua_OK (0/255)	State of output "UA-OK relay" : Indicates whether all of the power supply system output voltages are correct.			Unsigned8
Max device output current [10mA]	Maximum output current of the power supply system.			Unsigned16
Output Utarget [10 mV]	Currently set setpoint of the output voltage.			Unsigned16
Output Ilimit [10 mA]	Response threshold value of the output current for the particular output. When this is exceeded, the output current is interpreted as having an overload condition and is shut down with a time delay - or limited.			Unsigned16

Data	Description			Data type
Output Ithreshold (0-100%)	Prewarning threshold of the configured response threshold for the output current in %. An alarm is initiated when the actual output current exceeds this value. Operation is continued without any restrictions. Prewarning is deactivated by entering "0 %".			Unsigned8
Fill byte(s)	-			Unsigned8
Output voltage [10mV]	Voltage at the output.			Unsigned16
Output current [10mA]	Current at the output.			Unsigned16
Max output current [10mA]	Maximum output current at output.			Unsigned16
Output operation mode	Output operating mode: If the actual load current of an output exceeds the specified response threshold value of the output current, then the output can be shut down according to a current-time characteristic ("electronic shutdown"), or the load current can be limited to the response threshold ("constant current").	0 = ModeSelect	Electronic shutdown: The output is shut down when the response threshold value is exceeded.	Unsigned8
		1 = ModeModular	Constant current: When the response threshold value is exceeded, the load current is limited to the response threshold until this is fallen below again.	
Fill byte(s)	-			Unsigned8
Channel1 operation state	Operating state output 1	0 = ManualOff	Output switched off manually (button):	Unsigned8
		1 = RemoteOff	Output switched off (PROFINET/IE):	
		2 = BufferOff	Output switched off	
		3 = OverLoadOff	Output switched off (overload):	
		4 = ReadyForRestart	Output ready for reset:	
		5 = ErrorOff	Output switched off (fault)	
		6 = Boot	Output switched off (powering up)	
		7 = Running	Output switched on (normal operation)	
		8 = OverLoad	Output in overload operation:	
		9 = Limit	Output current limited to the response threshold:	
		10 = Overloaded (SystemOverload)	Output in overload operation (with derating):	
		11 = LimitAfter (SystemOverload)	Output current limited (with derating)	
Fill byte(s)	-			Unsigned8
LED color	Actual LED color. Each LED is represented by 2	0	LED is off	Unsigned16
		1	LED lit green	

Data	Description			Data type
	bits: • Bit0/1: OK • Bit2/3: Man/Remote • Bit4/5: Output • Bit6-15: Not used	2	LED lit red:	
		3	LED lit yellow	
LED state	Actual display status of the LEDs. Each LED is represented by 2 bits: • Bit0/1: OK • Bit2/3: Man/Remote • Bit4/5: Output • Bit6-15: Not used	0	LED is off	Unsigned16
		1	LED is lit	
		2	LED flashes at 1 Hz	
		3	LED flashes at 2 Hz	

Index 0x0021: Buffer state information (reading)

Data	Description	Data type
Buffering disabled by inputs [0/255]	Buffer component was deactivated via the control contact.	Unsigned8
Buffer ready (0/255)	Buffer component ready for buffering.	Unsigned8
Charging state (0-100 %)	Charge state of the buffer module.	Unsigned8
Fill byte(s)	-	Unsigned8

Index 0x0030: PROFIenergy values (reading / writing)

Data	Description	Data type
PROFIenergyEnabled (0/255)	Enable PROFIenergy on this device	Unsigned8
Fill byte(s)	-	3xUnsigned8
Time_To_Pause [ms]	-	Unsigned32
Time_To_Operate [ms]	-	Unsigned32
Minimum_Stay [ms]	-	Unsigned32
Maximum_Stay [ms]	-	Unsigned32
Saving_Power_Consumption [kW]	-	Float
Operate_Power_Consumption [kW]	-	Float
Energy_Consumption_To_Pause [kWh]	-	Float
Energy_Consumption_To_Operate [kWh]	-	Float

Index 0x0031: PROFIenergy channel list (reading/writing)

Data	Description	Data type
ChannelsOffList	Overview of the outputs that are shutdown. Each output is represented using 1 bit (starting with bit 0 for output 1).	Unsigned32

Index 0x0035: Web server (reading/writing)

Data	Description	Data type
WebserverEnabled	Activating/deactivating the web server of the SITOP PSU8600: • 0: disable • 255. enable	Unsigned8
AutoReloadEnabled	Enable/disable automatic update: • 0: disable • 255. enable	Unsigned8
ReloadTime	Update interval: • 0: Off • 5: 5s • 10: 10s • 20: 20s • 30: 30s • 60: 60s	Unsigned8
AutoLogout	Enable/disable automatic logoff: • 0: disable • 255. enable When automatic logoff is activated, the logged on user ("Guest" or "Admin") is automatically logged off when the SITOP PSU8600 web server is inactive for 15 minutes.	Unsigned8
HttpAccessEnable	Access only permitted via HTTPS: • 0: disable • 255. enable	Unsigned8

Index 0x0040: Identification values (reading/writing)

Data	Description	Data type
Contact	Name of the contact person. You can change the name to suit your requirements.	VisibleString(64)
Location	Location designation: Indicates the unique location of the SITOP PSU8600.	VisibleString(44)

7.6.2.3 Data sets SITOP CNX8600

Index 1: Channel1...4 remote target values (reading/writing)

The saved data of an output are listed in the table below. The data applies to outputs 1 to 4.

Data	Description			Data type
Utarget [10mV]	Currently set setpoint of the output voltage.			Unsigned16
Ilimit [10mA]	Response threshold of the output current for an output. When this is exceeded, the output current is interpreted as having an overload condition and is shut down with a time delay - or limited.			Unsigned16
Ithreshold (0-100%)	Prewarning threshold of the configured response threshold for the output current in %. An alarm is initiated when the actual output current exceeds this value. Operation is continued without any restrictions. Prewarning is deactivated by entering "0 %".			Unsigned8
OutputEnable (0/255)	Switch on output Switches the output on or off. A possible automatic shutdown due to overload or power failure is not taken into account.			Unsigned8
Reset	Resets the output: Resets the automatic overload shutdown of an output. Assuming that the output is not switched off elsewhere, then after the reset, it is switched on again.			Unsigned8
Operation Mode	Mode: If the actual load current of an output exceeds the specified response threshold value of the output current, then the output can be shut down according to a current-time characteristic ("electronic shutdown"), or the load current can be limited to the response threshold ("constant current").	0 = ModeSelect	Electronic shutdown: The output is shut down when the response threshold value is exceeded.	Unsigned8
		1 = ModeModular	Constant current: When the response threshold value is exceeded, the load current is limited to the response threshold until this is fallen below again.	
Startup Delay [ms]	ON delay Individual delay time for the output, referred to a common starting point. Only valid for system switch-on behavior "Variable on delay".			Unsigned16

Index 0x0006: Device information (reading)

Data	Description	Data type
MLFB / Order number	Article No. / Order number	VisibleString(20)
Product state	Product release	Unsigned8
Fill byte(s)	-	Unsigned8
SW version	Software version	Unsigned32
Serial number	Serial number	VisibleString(16)

Index 0x0007: Hardware settings (reading)

Data	Description	Data type
Utarget1 potentiometer [10mV]	Manually set setpoint of the output voltage at output 1: Setpoint of the output voltage for an output manually set using the potentiometer at the device; in normal operation, the output is controlled to this setpoint voltage.	Unsigned16
Ilimit1 potentiometer [10mA]	Manually set threshold of the output current at output 1. Response threshold of the output current for an output set using the potentiometer at the device. When this is exceeded, the output current is interpreted as having an overload condition and is shut down with a time delay - or limited.	Unsigned16
Output Enable1 manual button (0/255)	Actual DIP switch state for output 1: • 0 = Manually shut down • 255 = Manually switched on	Unsigned8
Fill byte(s)	-	Unsigned8
Utarget2 potentiometer [10mV]	Manually set setpoint of the output voltage at output 2: Setpoint of the output voltage for an output manually set using the potentiometer at the device; in normal operation, the output is controlled to this setpoint voltage.	Unsigned16
Ilimit2 potentiometer [10mA]	Manually set threshold of the output current at output 2. Response threshold of the output current for an output set using the potentiometer at the device. When this is exceeded, the output current is interpreted as having an overload condition and is shut down with a time delay - or limited.	Unsigned16
Output Enable2 manual button (0/255)	Actual DIP switch state for output 2: • 0 = Manually shut down • 255 = Manually switched on	Unsigned8
Fill byte(s)	-	Unsigned8
Utarget3 potentiometer [10mV]	Manually set setpoint of the output voltage at output 3: Setpoint of the output voltage for an output manually set using the potentiometer at the device; in normal operation, the output is controlled to this setpoint voltage.	Unsigned16
Ilimit3 potentiometer [10mA]	Manually set threshold of the output current at output 3. Response threshold of the output current for an output set using the potentiometer at the device. When this is exceeded, the output current is interpreted as having an overload condition and is shut down with a time delay - or limited.	Unsigned16
Output Enable3 manual button (0/255)	Actual DIP switch state for output 3: • 0 = Manually shut down • 255 = Manually switched on	Unsigned8
Fill byte(s)	-	Unsigned8

Data	Description	Data type
Utarget4 potentiometer [10mV]	Manually set setpoint of the output voltage at output 4: Setpoint of the output voltage for an output manually set using the potentiometer at the device; in normal operation, the output is controlled to this setpoint voltage.	Unsigned16
Ilimit4 potentiometer [10mA]	Manually set threshold of the output current at output 4. Response threshold of the output current for an output set using the potentiometer at the device. When this is exceeded, the output current is interpreted as having an overload condition and is shut down with a time delay - or limited.	Unsigned16
Output Enable4 manual button (0/255)	Actual DIP switch state for output 4: • 0 = Manually shut down • 255 = Manually switched on	Unsigned8
Fill byte(s)	-	Unsigned8

Index 0x0020: State information (reading)

Data	Description			Data type
Fill byte(s)	-			Unsigned16
Module operation state	Operating state	0 = Off	Expansion module is switched off	Unsigned8
		1 = ErrorOff	The expansion module was automatically shut down as a result of operation under inadmissible operating conditions.	
		2 = CooledDown	After an automatic shutdown due to a fault, the expansion module can be reactivated by switching off and switching on the supply voltage.	
		3 = Boot	The expansion module is powering up, all of the outputs are still switched off.	
		4 = Running	The expansion module is operating in the normal mode.	
		5 = Buffering	Primary supply voltage has failed. The expansion module is operating in the buffer mode.	
Channel1 Utarget [10mV]	Currently set setpoint of the output voltage for output 1.			Unsigned16
Channel1 Ilimit [10 mA]	Response threshold of the output current for output 1. When this is exceeded, the output current is interpreted as having an overload condition and is shut down with a time delay - or limited.			Unsigned16

Data	Description			Data type
Channel1 Ithreshold (0-100%)	Prewarning threshold of the configured response threshold for the output current in %. An alarm is initiated when the actual output current exceeds this value. Operation is continued without any restrictions. Prewarning is deactivated by entering "0 %".			Unsigned8
Fill byte(s)	-			Unsigned8
Channel1 output voltage [10mV]	Output voltage at output 1.			Unsigned16
Channel1 output current [10mA]	Output current at output 1.			Unsigned16
Channel1 max output current [10mA]	Maximum output current at output 1.			Unsigned16
Channel1 Operation mode	Operating mode output 1: If the actual load current of an output exceeds the specified response threshold value of the output current, then the output can be shut down according to a current-time characteristic ("electronic shutdown"), or the load current can be limited to the response threshold ("constant current").	0 = ModeSelect	Electronic shutdown: The output is shut down when the response threshold value is exceeded.	Unsigned8
		1 = ModeModular	Constant current: When the response threshold value is exceeded, the load current is limited to the response threshold until this is fallen below again.	
Channel1 operation state	Operating state output 1	0 = ManualOff	Output switched off manually (button):	Unsigned8
		1 = RemoteOff	Output switched off (PROFINET/IE):	
		2 = BufferOff	Output switched off	
		3 = OverLoadOff	Output switched off (overload):	
		4 = ReadyForRestart	Output ready for reset (reset):	
		5 = ErrorOff	Output switched off (fault)	
		6 = Boot	Output switched off (powering up)	
		7 = Running	Output switched on (normal operation)	
		8 = OverLoad	Output in overload operation:	
		9 = Limit	Output current limited to the response threshold:	
		10 = Overloaded (SystemOverload)	Output in overload operation (with derating):	
		11 = LimitAfter (SystemOverload)	Output current limited (with derating)	

Data	Description			Data type
Channel2 Utarget [10mV], Channel2 Ilimit [10mA]…Channel2 operation state	See data "Channel 1"			
Channel3 Utarget [10mV], Channel3 Ilimit [10mA]…Channel3 operation state	See data "Channel 1"			
Channel4 Utarget [10mV], Channel4 Ilimit [10mA]…Channel4 operation state	See data "Channel 1"			
LED color	Actual LED color. Each LED is represented by 2 bits: • Bit0/1: OK • Bit2/3: Channel1 • Bit4/5: Channel2 • Bit6/7: Channel3 • Bit8/9: Channel4 • Bit10-15: unused = 0	0	LED is off	Unsigned16
		1	LED lit green	
		2	LED lit red:	
		3	LED lit yellow	
LED state	Actual display status of the LEDs. Each LED is represented by 2 bits: • Bit0/1: OK • Bit2/3: Channel1 • Bit4/5: Channel2 • Bit6/7: Channel3 • Bit8/9: Channel4 • Bit10-15: unused = 0	0	LED is off	Unsigned16
		1	LED lights up	
		2	LED flashes at 1 Hz	
		3	LED flashes at 2 Hz	

7.6.2.4 Data sets SITOP BUF8600

Index 0x0006: Device information (reading)

Data	Description	Data type
MLFB / Order number	Article No. / Order number	VisibleString(20)
Product state	Product release	Unsigned8
Fill byte(s)	-	Unsigned8
SW version	Software version	Unsigned32
Serial number	Serial number	VisibleString(16)

Index 0x0020: State information (reading)

SITOP BUF8600 100 ms/40 A and SITOP BUF8600 300 ms/40 A

Data	Description			Data type
Fill byte(s)	-			Unsigned16
Fill byte(s)	-			Unsigned16
Charging current [10mA]	Charge current			Unsigned16
Load current [10mA]	Load current			Unsigned16
Module operation state	Operating state	0 = Off	Buffer component is in the "Off" operating state.	Unsigned8
		1 = Boot	Buffer component is powering up.	
		2 = Full	Complete buffer readiness: The energy storage device of the buffer component is fully charged (normal operation).	
		3 = Buffering	The buffer component is operating in the buffer mode: The power supply system is supplied via the buffer component(s).	
		4 = ErrorOff	Shutdown after an error: A fault/error has occurred when operating the buffer component. The buffer component is not operational and must be restarted by switching off the supply voltage and switching it on again.	
		5 = NotFully ChargedReady	Ready for buffer operation as the energy storage device of the buffer module has been sufficiently charged.	
		6 = NotFully ChargedNotReady	Not ready for buffer operation as the energy storage device of the buffer module has not been sufficiently charged and is presently being charged.	
Fill byte(s)	-			Unsigned8
LED color	Actual LED color. Each LED is represented by 2 bits: • Bit0/1: OK • Bit2-15: unused = 0	0	LED is off	Unsigned16
		1	LED lit green	
		2	LED lit red:	
		3	LED lit yellow	

Data	Description			Data type
LED state	Actual display status of the LEDs. Each LED is represented by 2 bits: • Bit0/1: OK • Bit2-15: unused = 0	0	LED is off	Unsigned16
		1	LED lights up	
		2	LED flashes at 1 Hz	
		3	LED flashes at 2 Hz	

SITOP BUF8600 4 s/40 A and SITOP BUF8600 10 s/40 A

Data	Description			Data type
Fill byte(s)	-			Unsigned16
Fill byte(s)	-			Unsigned16
Charging current [10mA]	Charge current			Unsigned16
Load current [10mA]	Load current			Unsigned16
Module operation state	Operating state	0 = Off	Buffer component is in the "Off" operating state.	Unsigned8
		1 = Boot	Buffer component is powering up.	
		2 = Full	Complete buffer readiness: The energy storage device of the buffer component is fully charged (normal operation).	
		3 = Buffering	The buffer component is operating in the buffer mode: The power supply system is supplied via the buffer component(s).	
		4 = ErrorOff	Shutdown after an error: A fault/error has occurred when operating the buffer component. The buffer component is not operational and must be restarted by switching off the supply voltage and switching it on again.	
		5 = NotFully ChargedReady	Ready for buffer operation as the energy storage device of the buffer module has been sufficiently charged.	
		6 = NotFully ChargedNotReady	Not ready for buffer operation as the energy storage device of the buffer module has not been sufficiently charged and is presently being charged.	
Charging state (0-100 %)	Charge state of the buffer module.			Unsigned8

Data	Description			Data type
Buffer disabled by input (0/255)	Buffer component was deactivated via the control contact.			Unsigned8
Fill byte(s)	-			Unsigned8
LED color	Actual LED color. Each LED is represented by 2 bits: • Bit0/1: OK • Bit2-15: unused = 0	0	LED is off	Unsigned16
		1	LED lit green	
		2	LED lit red:	
		3	LED lit yellow	
LED state	Actual display status of the LEDs. Each LED is represented by 2 bits: • Bit0/1: OK • Bit2-15: unused = 0	0	LED is off	Unsigned16
		1	LED lights up	
		2	LED flashes at 1 Hz	
		3	LED flashes at 2 Hz	

Troubleshooting

8

8.1 Troubleshooting based on the LED signal sequence

Refer to Displays (Page 30).

8.2 PROFINET alarm list

You can obtain additional information on an active alarm from the help text.
The extended error type is used to interpret alarms in S7 function blocks that you have programmed yourself.

The identifier in the "Maintenance" column indicates the severity of the fault/error:

- MR = Maintenance Required
- MD = Maintenance Demanded
- F = Failure (module has failed)

Output error				
Error Type	**Extended Error Type**	**Maintenance**	**Alarm text**	**Help text**
256	-	F	System error	System error
256	1	F	Incorrect checksum	Defective firmware detected. Device must be reactivated with a new firmware update.
256	2	F	Device failure	Device failure
256	3	MD	Maintenance demanded	Maintenance demanded
256	4	MR	Maintenance required	Maintenance required.
256	5	F	Module failure	Module failure.
256	6	F	Unexpected module type	The module has a module type that differs from the configuration. The module cannot be operated.
256	7	MD	Unexpected module type	The module has a module type that differs from the configuration. Deviations from the expected response may occur outside normal operation.
256	8	MR	Unexpected module type	The module has a module type that differs from the configuration. The system can be operated.
256	9	F	Shutdown due to overtemperature	Overtemperature in a system component detected.All outputs of the power supply system have been switched off.

Output error				
256	10	MD	Prewarning overtemperature	Danger of overtemperature detected in a system component. Immediate load reduction is recommended.
256	11	F	Invalid internal supply voltage	Voltage of the internal supply is too high. All outputs of the power supply system have been switched off.
256	12	F	Performing firmware update	Performing firmware update. Read/write access is currently not possible.
257	-	F	Device failure	Device failure.
257	1	F	Shutdown due to phase failure or unbalanced supply voltage.	Operation for phase failure or unbalanced supply voltage for an impermissibly long duration. All outputs of the power supply system have been switched off.
257	2	MD	Phase failure or unbalanced supply voltage	Phase failure or unbalanced supply voltage detected. Operation can continue for a limited time.
257	3	F	Shutdown due to impermissible supply voltage.	Supply voltage is outside the permissible limits. All outputs of the power supply system have been switched off.
257	4	MD	Supply voltage outside the nominal limits	Supply voltage is outside the nominal limits. Automatic derating (limited performance) can occur when the voltage is low.
257	5	MD	High-resistance internal supply.	High-resistance internal supply detected. Check connections!
257	6	F	Shutdown due to system overload	System load current is outside the permissible overload profile. Outputs of all expansion modules have been switched off.
257	7	MD	System overload	System load current detected within the permissible overload profile. Operation can continue for a brief period.
257	8	MR	Prewarning system overload	System load current is above the specified warning threshold. Operation can continue without restrictions.
257	9	MR	The system is ready to switch on again	System can be switched on again after automatic shutdown due to impermissible operating condition. Reset by switching the supply voltage off and on.
257	10	MR	Outputs of the expansion modules can be switched on again.	System can be switched on again after automatic shutdown due to impermissible operating condition. All outputs of the expansion modules can be manually switched on again.
257	11	MR	Buffer mode	The power supply system is supplied via buffer expansion module(s).
257	12	MR	Device failure during startup	Device failure during startup.
257	14	F	Expansion module is not available	Expansion module was not found. Power supply system response deviates from the configuration.

Output error				
257	15	F	Invalid number of modules	Invalid number of modules detected. Invalid slot.
257	16	MR	New unconfigured module detected	New unconfigured module detected.
257	17	F	Invalid system configuration	System configuration is incorrect. Normal operation of the system is not possible.
257	18	MD	Deviating system configuration	System configuration is different. Deviations from the expected response may occur outside normal operation.
257	19	MR	Invalid system configuration	System configuration is different. The system can be operated.
257	20	F	Unclassified hardware fault	Unclassified hardware fault has occurred. All outputs of the power supply system have been switched off.
257	21	F	Invalid parameter	Faulty parameter detected.
257	22	F	Unknown parameter	Unknown parameter detected.
257	23	F	Invalid parameter.	Invalid parameter value transferred.
257	24	F	Invalid parameter	Invalid parameter.
257	25	MR	Module with excessive power detected	A module with excessive power was detected. Normal system operation is possible.
257	26	MR	Unexpected module type detected	Unexpected module type detected.
257	27	MD	Module with reduced power detected.	A module with reduced power was detected. It is possible that a different system response is possible.
257	28	F	Incompatible module detected	The module type is incompatible to the configuration. The module cannot be commissioned.
257	29	F	Unexpected empty slot detected	Unexpected empty slot detected.
258	-	F	Fault at the output	Fault at the output
258	1	F	Overload shutdown of the output	Inadmissible overload at the output has occurred. The output was shut down.
258	2	MD	Overload detected at the output	Output current at the output is still within the permissible overload profile based on specified response threshold.
258	3	MR	Overload detected at the output.	Output current is above the specified warning threshold. Operation can continue without restrictions.
258	4	MR	Output is ready to be switched on	Output is ready to be switched on again after automatic overload shutdown.
258	5	MR	Current limit on the output after occurrence of an overload	Output is in overload mode. The output current is limited to the specified response threshold.
258	7	MR	Output was switched off to extend the buffer time	Output was switched off during buffer mode to continue supplying prioritized output 1 with power. Output will be switched on again automatically when power is restored.
259	-	F	Error in the buffer expansion module	Error in the buffer expansion module.

Output error				
259	1	MR	Buffer mode	The power supply system is supplied via the buffer expansion module(s).
259	2	F	Insufficient charge level	Insufficient charge level.
260	-	F	Communication error	Communication error.
260	1	F	Faulty communication to the module	Communication with the expansion module is faulty. All outputs on the expansion module have been switched off.
260	2	F	Communication error	Faulty internal communication. All outputs of the power supply system have been switched off.
260	3	F	PROFINET communication error	Communication to internal PROFINET module is faulty. All outputs of the power supply system have been switched off.
260	4	F	Communication problem exists	A communication problem exists between PROFINET module and main controller.

Technical data

9

Note

Technical data apply for a rated input voltage, rated load and 25 °C ambient temperature if nothing else is specified.

9.1 Input data

	Basic device 6EP3436-8SB00-2AY0	Basic device 6EP3437-8SB00-2AY0
Input	3-phase, AC	3-phase AC
Rated voltage $U_{in\ rated}$	400 - 500 V	400 - 500 V
Voltage range	320 - 575 V	320 - 575 V
• Remark	Derating for U_{in} 320 - 360 V and 530 - 575 V, see Image 9-3 Output current as a function of the input voltage (only basic device SITOP PSU8600 6EP3436-8SB00-2AY0) (Page 223) andImage 9-4 Output current as a function of the input voltage (power supply system SITOP PSU8600 6EP3436-8SB00-2AY0 with a minimum of one expansion module SITOP CNX8600) (Page 224).	
Wide-range input	Yes	Yes
Overvoltage strength	2.3 × $U_{in\ rated}$, 1.3 ms	2.3 × $U_{in\ rated}$, 1.3 ms
Line failure buffering at $I_{out\ rated}$, min	15 ms[1.2)]	15 ms[1.2)]
Power failure buffering	At U_e = 400 V	At U_{in} = 400 V
Rated line frequency	50 - 60 Hz	50 - 60 Hz
Line frequency range	47 - 63 Hz	47 - 63 Hz
Input current / at rated value of input voltage 400 V	1.4 A	2.75 A
Input current / at rated value of input voltage 500 V	1.1 A	2.2 A
Inrush current limit (25 °C), max.	14 A	14 A
I^2t, max.	1.2 A^2s	2.24 A^2s

	Basic device **6EP3436-8SB00-2AY0**	**Basic device** **6EP3437-8SB00-2AY0**
Integrated input fuse	None	None
Protection in the line feeder cable (IEC 898)	Required: 3-pole, coupled miniature circuit breaker 6 - 16 A characteristic C or circuit breaker 3RV2011-1DA10 (setting 3 A) or 3RV2711-1DD10 (UL 489)	required: 3-pole, coupled miniature circuit breaker 10 ... 16 A characteristic C or circuit breaker 3RV2011-1DA10 (setting 3 A) or 3RV2711-1DD10 (UL 489)

1) Can be expanded by a maximum of 2 buffer modules

2) in conjunction with CNX8600 expansion module: Prioritized supply of the output when the power fails, can be selected using DIP switch.

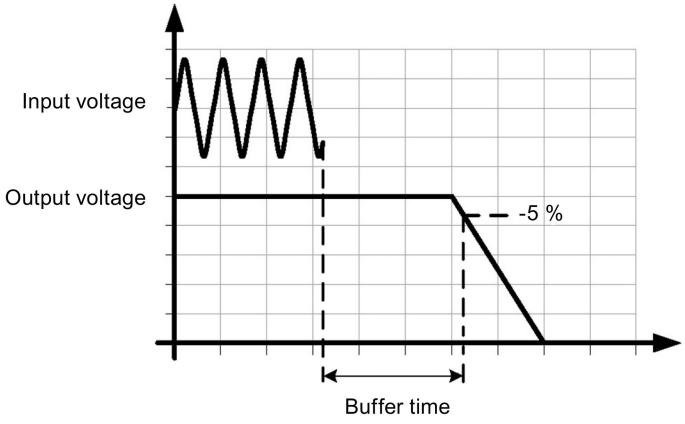

Image 9-1 Power failure buffering

9.2 Output data

	Basic device **6EP3436-8SB00-2AY0**	**Basic device** **6EP3437-8SB00-2AY0**	**Expansion module** **6EP4436-8XB00-0CY0**	**Expansion module** **6EP4437-8XB00-0CY0**
Output	Regulated, isolated DC voltage			
Number of outputs	1[1)]	1[1)]	4	4
Rated voltage $U_{out\ rated}$ DC	24 V	24 V	24 V	24 V
Total tolerance, static ±	3%	3 %	3%	3%
Static line regulation, approx.	0.2%	0.2%	0.2%	0.2%
Static load regulation, approx.	0.1 %	0.1 %	0.1 %	0.1 %
Residual ripple in the load range peak-peak, max.	100 mV	100 mV	100 mV	100 mV
Spikes peak-peak, max. (bandwidth, approx. 20 MHz)	200 mV	200 mV	200 mV	200 mV
Adjustment range	5 - 28 V	5 - 28 V	5 - 28 V	5 - 28 V
• Remark	Derating > 24 V: 4 % I_{out}/V	Derating > 24 V: 4 % I_{out}/V	Derating > 24 V: 4 % I_{out}/V	Derating > 24 V: 4 % I_{out}/V
Output voltage setting	using potentiometer	using potentiometer	using potentiometer	using potentiometer
Operating display	3-color LED for the device operating status; LED for manual/remote operating mode; 4 LED for PROFINET communication; 3-color LED for the device operating status;	3-color LED for the device operating status; LED for manual/remote mode; 4 LEDs for PROFINET communication; 3-color LED for the device operating status;	3-color LED for the module operating status; 3-color LED per output for the output operating status	3-color LED for the module operating status; 3-color LED per output for the output operating status
Signaling	Relay contact (changeover contact, rating 60 V DC /0.3 A) for "OK"	Relay contact (changeover contact, rating 60 V DC /0.3 A) for "OK"	Via relay contact, basic unit	Via relay contact, basic unit
Switch-on/switch-off behavior	No overshoot of U_a (Soft-Start)			
Starting delay, max.	1 s	1 s	1 s	1 s
Voltage rise time / of the output voltage / maximum	500 ms	500 ms	500 ms	500 ms

	Basic device 6EP3436-8SB00-2AY0	Basic device 6EP3437-8SB00-2AY0	Expansion module 6EP4436-8XB00-0CY0	Expansion module 6EP4437-8XB00-0CY0
Switching-in of the outputs	In conjunction with CNX8600 expansion module: all outputs are simultaneously switched-on after the device powers up, after a delay time of 25 ms, 100 ms – or "load optimized" where the outputs are sequentially switched-on, can be selected via DIP switch			
Rated current $I_{out\ rated}$	20 A	40 A	20 A[2)]	40 A[2)]
Current range • Remark	0 - 20 A 50 ... 60 °C: Derating 2.5 %/K	0 - 40 A 50 … 60 °C: Derating 2.5 %/K	0 - 20 A[2)]	0 - 40 A[2)]
	no derating in conjunction with the expansion module SITOP CNX8600 and total load of the outputs at the basic device max. 240 W or 480 W (see Image 9-7 Output power as a function of the ambient temperature for SITOP PSU8600 6EP3436-8SB00-2AY0 (Page 225) and Image 9-8 Output power as a function of the ambient temperature for SITOP PSU8600 6EP3437-8SB00-2AY0 (Page 226))		-	-
Output current per output	20 A	40 A	5 A[2)]	10 A[2)]
Output active power / typical	480 W	960 W	480 W[2)]	960 W[2)]
Overload capability	Complete system can be overloaded up to 150 % for 5 s/min	Complete system can be overloaded up to 150 % for 5 s/min	-	-
Can be connected in parallel to increase the power rating	Yes, inclined output characteristic can be selected using a DIP switch	Yes, inclined output characteristic can be selected using a DIP switch	-	-
Number of devices that can be connected in parallel to increase the power rating	2	2	-	-

1) Can be expanded using a maximum of 4 expansion modules

2) Using the SITOP CNX8600 expansion module it is not possible to increase the maximum output power of the complete system SITOP PSU8600 .

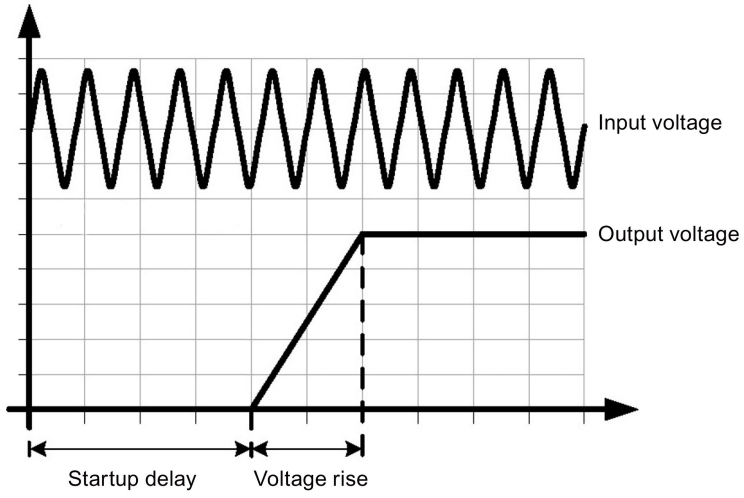

Image 9-2 Starting delay/voltage rise

Output current as a function of the input voltage

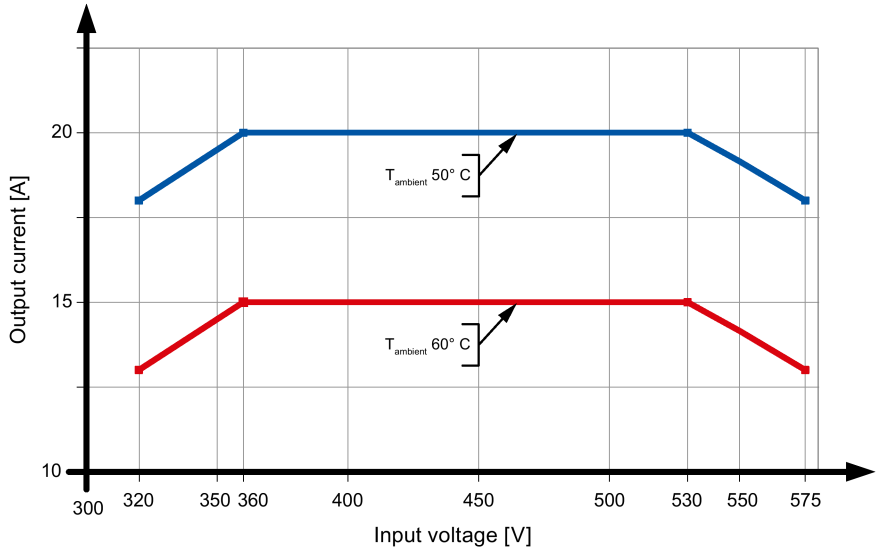

Image 9-3 Output current as a function of the input voltage (only basic device SITOP PSU8600 6EP3436-8SB00-2AY0)

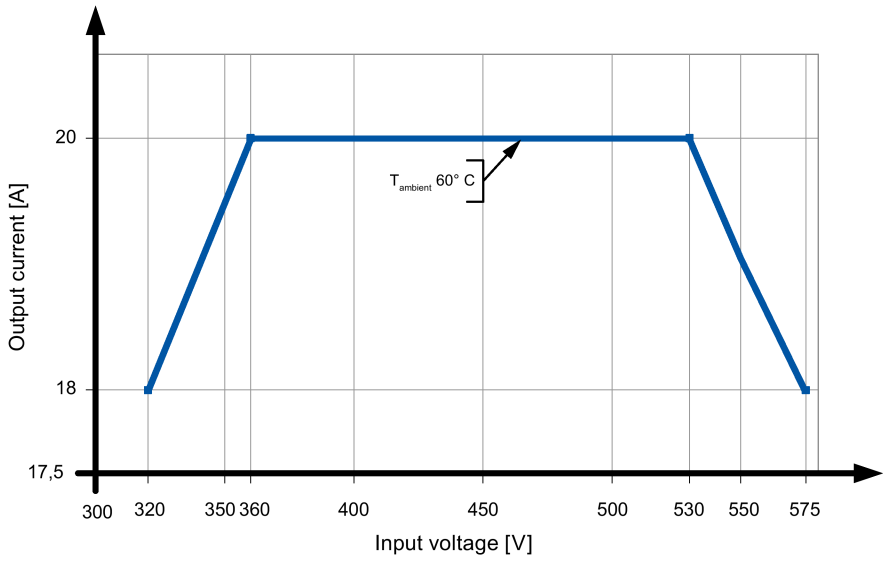

Image 9-4 Output current as a function of the input voltage (power supply system SITOP PSU8600 6EP3436-8SB00-2AY0 with a minimum of one expansion module SITOP CNX8600)

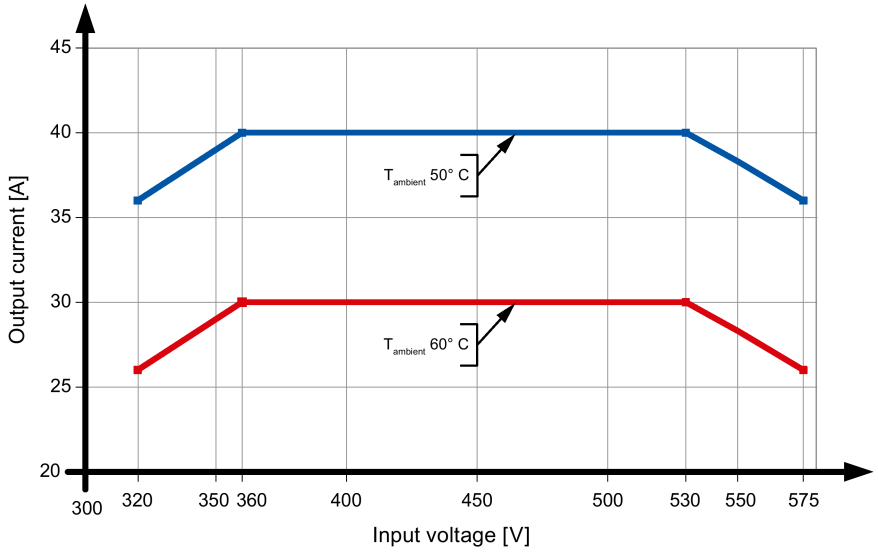

Image 9-5 Output current as a function of the input voltage (only basic device SITOP PSU8600 6EP3437-8SB00-2AY0)

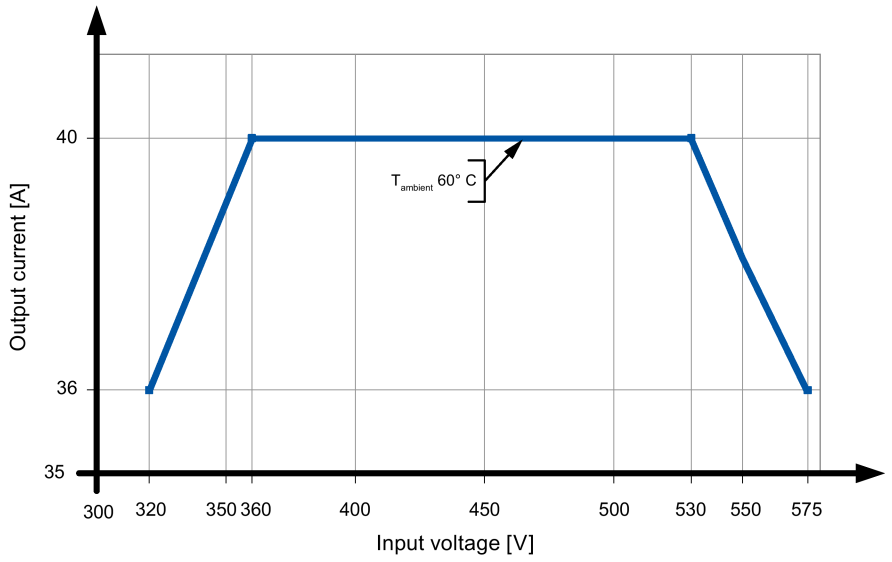

Image 9-6 Output current as a function of the input voltage (power supply system SITOP PSU8600 6EP3437-8SB00-2AY0 with a minimum of one expansion module SITOP CNX8600)

Output power as a function of the ambient temperature

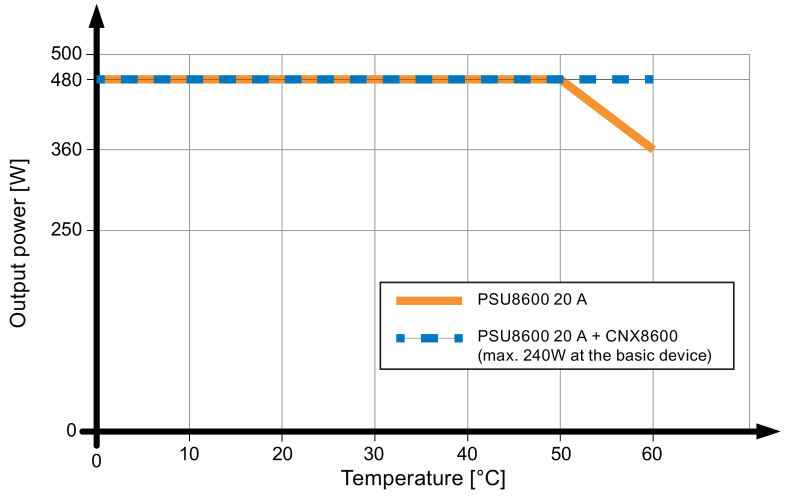

Image 9-7 Output power as a function of the ambient temperature for SITOP PSU8600 6EP3436-8SB00-2AY0

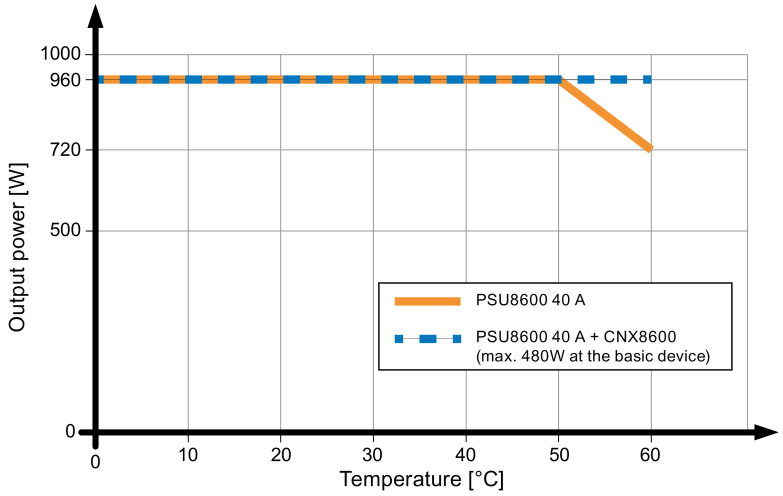

Image 9-8 Output power as a function of the ambient temperature for SITOP PSU8600 6EP3437-8SB00-2AY0

The output power characteristics in the diagram above were plotted for a voltage of 24 V and identical load currents at all outputs.

9.3 Efficiency

	Basic device 6EP3436-8SB00-2AY0	Basic device 6EP3437-8SB00-2AY0	Expansion module 6EP4436-8XB00-0CY0	Expansion module 6EP4437-8XB00-0CY0
Efficiency at $U_{out\ rated}$, $I_{out\ rated}$, approx.	> 93 %	> 93 %	97 %	97 %
Power loss at $U_{out\ rated}$, $I_{out\ rated}$, approx.	34 W	72 W	15 W	30 W
Power loss for no-load operation	Typ. 12 W	Typ. 20 W		

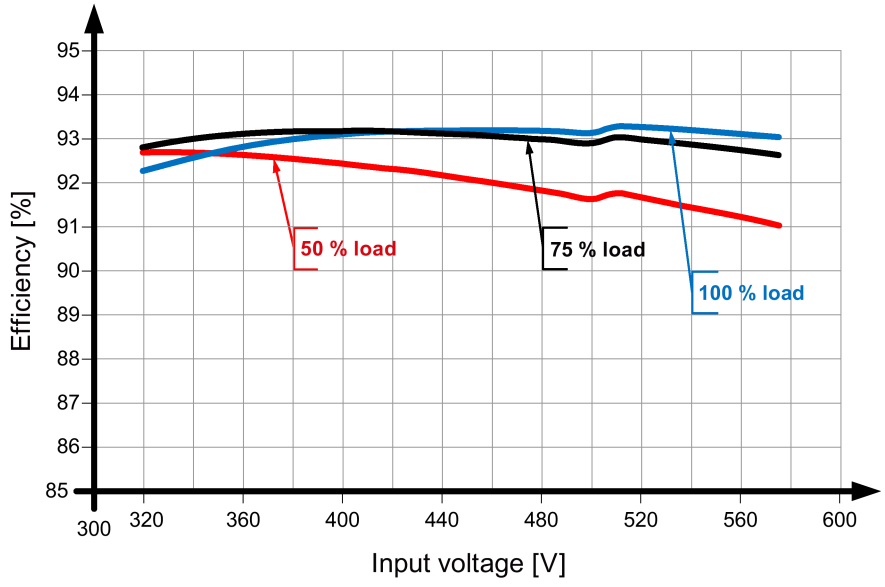

Image 9-9 Efficiency of the basic device 6EP3436-8SB00-2AY0 at $U_{out\ rated}$, $I_{out\ rated}$

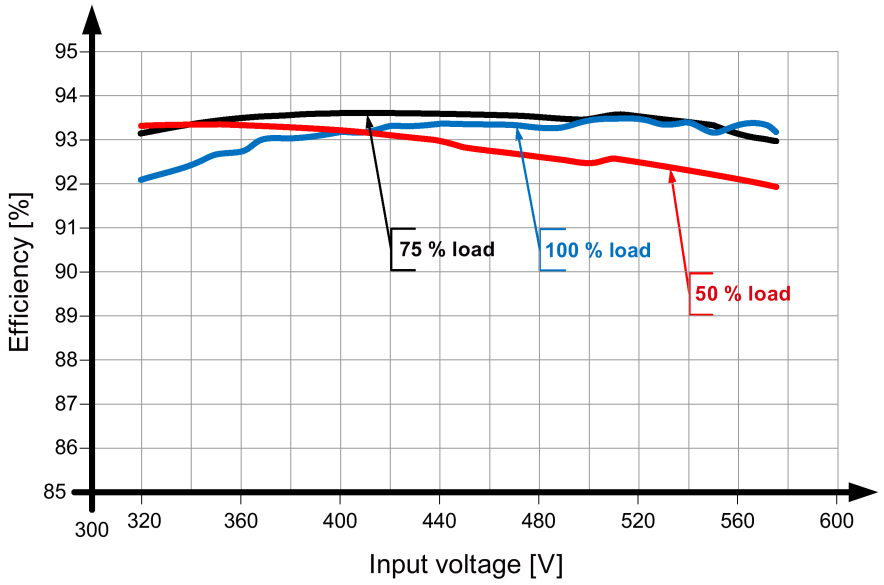

Image 9-10 Efficiency of the basic device 6EP3437-8SB00-2AY0 at $U_{out\ rated}$, $I_{out\ rated}$

9.4 Closed-loop control

	Basic device 6EP3436-8SB00-2AY0	Basic device 6EP3437-8SB00-2AY0	Expansion module 6EP4436-8XB00-0CY0	Expansion module 6EP4437-8XB00-0CY0
Dyn. line regulation ($U_{in\ rated}$ ±15 %), max.	0.1 %	0.1 %	0.1 %	0.1 %
Dyn. load regulation (I_{out}: 50/100/50 %), U_{out} ± typ.	0.4 %	0.4 %	0.4 %	0.4 %
Regulation time / maximum	10 ms	10 ms	10 ms	10 ms

9.5 Protection and monitoring

	Basic device **6EP3436-8SB00-2AY0**	**Basic device** **6EP3437-8SB00-2AY0**	**Expansion module** **6EP4436-8XB00-0CY0**	**Expansion module** **6EP4437-8XB00-0CY0**
Output overvoltage protection	< 35 V	< 35 V	< 35 V	< 35 V
Property of the output / short-circuit proof	Yes	Yes	Yes	Yes
Short-circuit protection	Electronic overload shutdown[1)]	Electronic overload shutdown[1)]	Electronic overload shutdown	Electronic overload shutdown
Adjustable response threshold value	2 - 20 A	4 - 40 A	0.5 - 5 A	0.5 - 10 A
Type of response threshold value setting	using potentiometer	using potentiometer	using potentiometer	using potentiometer
Characteristic of the electronic overload shutdown	I_{out} > 1.0...< 1.5 × $I_{out\ threshold}$ permissible for 5 s	I_{out} > 1.0...< 1.5 × $I_{out\ threshold}$ permissible for 5 s	I_{out} > 1.0...< 1.5 × $I_{out\ threshold}$ permissible for 5 s	I_{out} > 1.0...< 1.5 × $I_{out\ threshold}$ permissible for 5 s
	$I_{out\ limit}$ (= 1.5 x $I_{out\ threshold}$) permissible for 200 ms	$I_{out\ limit}$ (= 1.5 x $I_{out\ threshold}$) permissible for 200 ms	$I_{out\ limit}$ (= 1.5 x $I_{out\ threshold}$) permissible for 200 ms	$I_{out\ limit}$ (= 1.5 x $I_{out\ threshold}$) permissible for 200 ms
Reset	Using a button at the output	Using a button at the output	Using a button for each output	Using a button for each output
Remote reset	Non-isolated 24 V input (signal level "high" for > 15 V)	Non-isolated 24 V input (signal level "high" for > 15 V)	Via remote reset, basic unit	Via remote reset, basic unit
Characteristic for constant current operation	$I_{out\ limit}$ (= 1.5 × $I_{out\ threshold}$) permissible for 5 s, then $I_{out\ threshold}$ continuously	$I_{out\ limit}$ (= 1.5 × $I_{out\ threshold}$) permissible for 5 s, then $I_{out\ threshold}$ continuously	$I_{out\ limit}$ (= 1.5 × $I_{out\ threshold}$) permissible for 5 s, then $I_{out\ threshold}$ continuously	$I_{out\ limit}$ (= 1.5 × $I_{out\ threshold}$) permissible for 5 s, then $I_{out\ threshold}$ continuously
Brief overload current in constant current operation	typ. 60 A [2)]	typ. 120 A [2)]	-	-
Duration of the brief overload current	25 ms	25 ms	-	-
Overload/short-circuit indicator	3-color LED for the device operating status; 3-color LED per output for the output operating status	3-color LED for the device operating status; 3-color LED per output for the output operating status	3-color LED for the module operating status; 3-color LED per output for the output operating status	3-color LED for the module operating status; 3-color LED per output for the output operating status

1) Constant current behavior for output can be selected using DIP switch

2) Only possible when operated without CNX8600

9.6 MTBF

	Basic devices 6EP3436-8SB00-2AY0 6EP3437-8SB00-2AY0	Expansion modules 6EP4436-8XB00-0CY0 6EP4437-8XB00-0CY0	Buffer modules 6EP4297-8HB00-0XY0 6EP4297-8HB10-0XY0 6EP4293-8HB00-0XY0 6EP4295-8HB00-0XY0
Mean Time Between Failures	SN29500: > 500000 h at 40 °C, rated load, 24 hour operation		

9.7 Mechanical system

	Basic device 6EP3436-8SB00-2AY0	Basic device 6EP3437-8SB00-2AY0	Expansion module 6EP4436-8XB00-0CY0	Expansion module 6EP4437-8XB00-0CY0
Connection system	Plug-in terminal with screw connection			
Connections / line supply	L1, L2, L3, PE: 1 screw terminal each for 0.08 ... 4 mm² solid/finely stranded	L1, L2, L3, PE: 1 screw terminal each for 0.08 ... 4 mm² solid/finely stranded	-	-
Connections / output	2 screw terminals for 0.08 - 4 mm² 0V: 3 screw terminals for 0.08 - 4 mm²	2 screw terminals for 0.5 - 10 mm² 0V: 3 screw terminals for 0.5 - 10 mm²	1, 2, 3, 4: 1 screw terminal each for 0.2 - 2.5 mm² GROUND: 3 screw terminals for 0.2 - 2.5 mm²	1, 2, 3, 4: 1 screw terminal each for 0.2 - 2.5 mm² GROUND: 3 screw terminals for 0.2 - 2.5 mm²
Connections / signaling contacts	11, 12, 14 (signal): 1 screw terminal each for 0.2 ... 1.5 mm²	11, 12, 14 (signal): 1 screw terminal each for 0.2 ... 1.5 mm²	-	-
Connections / auxiliary contacts	RST (reset): Plug-in terminal (common with the signal) with 1 screw connection for 0.2 ... 1.5 mm²	RST (reset): Plug-in terminal (common with the signal) with 1 screw connection for 0.2 ... 1.5 mm²	-	-
Connections / interface Ethernet / PROFINET	Two RJ45 sockets (2 port switch)	Two RJ45 sockets (2 port switch)	-	-
System connection	-	-	Integrated connecting plug	Integrated connecting plug
Width / of the housing	80 mm	125 mm	60 mm	60 mm
Height / of the housing	125 mm	125 mm	125 mm	125 mm
Depth / of the housing	150 mm	150 mm	150 mm	150 mm

	Basic device	**Basic device**	**Expansion module**	**Expansion module**
	6EP3436-8SB00-2AY0	**6EP3437-8SB00-2AY0**	**6EP4436-8XB00-0CY0**	**6EP4437-8XB00-0CY0**
Installation width	80 mm	125 mm	60 mm	60 mm
Mounting height	225 mm	225 mm	225 mm	225 mm
Weight, approx.	1.8 kg	2.65 kg	1.15 kg	1.15 kg
Product feature / of the housing / housing that can be lined up next to one another	Yes	Yes	Yes	Yes
Type of mounting / panel mounting	No	No	No	No
Type of mounting / rail mounting	Yes	Yes	Yes	Yes
Mounting	Can be snapped onto standard EN 60715 35x15 mounting rails	Can be snapped onto standard EN 60715 35x15 mounting rails	Can be snapped onto standard EN 60715 35x15 mounting rails	Can be snapped onto standard EN 60715 35x15 mounting rails

	Buffer module	**Buffer module**	**Buffer module**	**Buffer module**
	6EP4297-8HB00-0XY0	**6EP4297-8HB10-0XY0**	**6EP4293-8HB00-0XY0**	**6EP4295-8HB00-0XY0**
Connections / signaling contacts	-	-	13, 14, 23, 24 (signals): 1 screw terminal each for 0.2 - 1.5 mm^2	13, 14, 23, 24 (signals): 1 screw terminal each for 0.2 - 1.5 mm^2
Auxiliary contact connections	-	-	X1, X2 (control contact): 1 screw terminal each for 0.2 - 1.5 mm^2	X1, X2 (control contact): 1 screw terminal each for 0.2 - 1.5 mm^2
System connection	Integrated connecting plug	Integrated connecting plug	Integrated connecting plug	Integrated connecting plug
Width / of the housing	60 mm	125 mm	60 mm	125 mm
Height / of the housing	125 mm	125 mm	125 mm	125 mm
Depth / of the housing	150 mm	150 mm	150 mm	150 mm
Installation width	60 mm	125 mm	60 mm	125 mm
Mounting height	225 mm	225 mm	225 mm	225 mm
Weight, approx.	1.33 kg	2.26 kg	1.25 kg	1.95 kg
Product feature of the housing / housing that can be lined up next to one another	Yes	Yes	Yes	Yes
Type of mounting / panel mounting	No	No	No	No

	Buffer module **6EP4297-8HB00-0XY0**	**Buffer module** **6EP4297-8HB10-0XY0**	**Buffer module** **6EP4293-8HB00-0XY0**	**Buffer module** **6EP4295-8HB00-0XY0**
Type of mounting / rail mounting	Yes	Yes	Yes	Yes
Mounting	Can be snapped onto standard EN 60715 35x15 mounting rails	Can be snapped onto standard EN 60715 35x15 mounting rails	Can be snapped onto standard EN 60715 35x15 mounting rails	Can be snapped onto standard EN 60715 35x15 mounting rails

9.8 Accessories

	Basic devices **6EP3436-8SB00-2AY0** **6EP3437-8SB00-2AY0**	**Expansion modules** **6EP4436-8XB00-0CY0** **6EP4437-8XB00-0CY0**	**Buffer modules** **6EP4297-8HB00-0XY0** **6EP4297-8HB10-0XY0** **6EP4293-8HB00-0XY0** **6EP4295-8HB00-0XY0**
Electrical accessories	Expansion module, buffer module	-	-
Mechanical accessories	Device identification labels 20 mm × 7 mm, TI-grey 3RT2900-1SB20		

9.9 Dimension drawings

See Section Dimensions and weights (Page 43).

CAD data that can be downloaded from the Internet:

SITOP PSU8600 basic devices

6EP3436-8SB00-2AY0
(http://www.automation.siemens.com/bilddb/index.aspx?objkey=G_KT01_XX_01089)

6EP3437-8SB00-2AY0
(http://www.automation.siemens.com/bilddb/index.aspx?objkey=G_KT01_XX_01083)

Expansion modules SITOP CNX8600

6EP4436-8XB00-0CY0
(http://www.automation.siemens.com/bilddb/index.aspx?objkey=G_KT01_XX_00996)

6EP4437-8XB00-0CY0
(http://www.automation.siemens.com/bilddb/index.aspx?objkey=G_KT01_XX_00999)

Buffer modules SITOP BUF8600

6EP4297-8HB00-0XY0
(http://www.automation.siemens.com/bilddb/index.aspx?objkey=G_KT01_XX_01005)

6EP4297-8HB10-0XY0
(http://www.automation.siemens.com/bilddb/index.aspx?objkey=G_KT01_XX_01008)

6EP4293-8HB00-0XY0
(http://www.automation.siemens.com/bilddb/index.aspx?objkey=G_KT01_XX_01092)

6EP4295-8HB00-0XY0
(http://www.automation.siemens.com/bilddb/index.aspx?objkey=G_KT01_XX_01095)

Safety, approvals, EMC

10

10.1 Safety

	Basic devices 6EP3436-8SB00-2AY0 6EP3437-8SB00-2AY0	Expansion modules 6EP4436-8XB00-0CY0 6EP4437-8XB00-0CY0	Buffer modules 6EP4297-8HB00-0XY0 6EP4297-8HB10-0XY0 6EP4293-8HB00-0XY0 6EP4295-8HB00-0XY0
Primary/secondary galvanic isolation	Yes	-	-
Electrical isolation	SELV output voltage Uout according to EN 60950-1 and EN 50178		-
Protection class (EN 61140)	Class I	Class III	Class III
Degree of protection (EN 60529)	IP 20		
Leakage current, max.	3.5 mA	-	-
Test voltage	See Test voltages (Page 236)		-

10.2 Test voltages

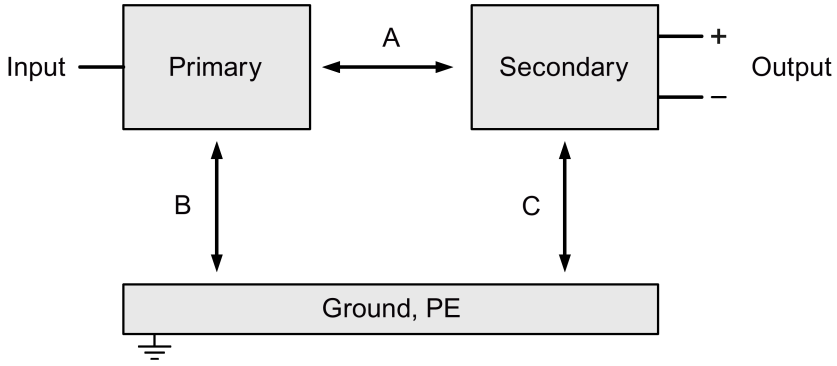

Image 10-1 Test voltage without auxiliary contact diagram

Only the manufacturer can perform the type test and production test; users can also perform the field test.

Preconditions for performing the field test:

Tests (A) & (B)

- Connect the input terminals with one another
- Connect the output terminals with PE

Test (C)

- Connect the output terminals with one another and measure with respect to PE

Table 10- 1 Test voltage

	Test time	Prim ↔ sec (A)	Prim ↔ PE (B)	Sec ↔ PE (C)
Type test	60 s	4200 VDC	2200 VDC	700 VDC
	60 s	3000 VAC	1500 VAC	500 VAC
Production test	1 s	2200 VDC	2200 VDC	500 VDC
	1 s	1500 VAC	1500 VAC	350 VAC
Field test	1 s	2200 VDC	2200 VDC	500 VDC
	1 s	1500 VAC	1500 VAC	350 VAC

Remark:

Tripping current for DC measurement: 0 mA

Tripping current for AC measurement: < 100 mA

10.3 Approvals

	Basic devices **6EP3436-8SB00-2AY0** **6EP3437-8SB00-2AY0**	**Expansion modules** **6EP4436-8XB00-0CY0** **6EP4437-8XB00-0CY0**	**Buffer modules** **6EP4297-8HB00-0XY0** **6EP4297-8HB10-0XY0** **6EP4293-8HB00-0XY0** **6EP4295-8HB00-0XY0**
CE marking	Yes, (2004/108/EG and 2006/95/EG)		
UL/cUL (CSA) approval	cULus-Listed (UL 508, CSA C22.2 No. 107.1), File E197259; cCSAus (CSA C22.2 No. 60950-1, UL 60950-1)		
CB approval	Yes		
Explosion protection	ATEX (EX) II 3G Ex nA nC IIC T4 Gc;	ATEX (EX) II 3G Ex nA IIC T4 Gc;	ATEX (EX) II 3G Ex nA IIC T5 Gc;
	cCSAus (CSA C22.2 No. 213, ANSI/ISA-12.12.01-2007) [1]		
IECex	IECEx EPS 14.0059X		
SEMI F47 compliance	Yes		
Marine approvals	GL; ABS being prepared		
RCM approval	Yes		
EAC approval	Yes		
KCC approval	Yes		

[1] Only 6EP4436-8XB00-0CY0, 6EP4437-8XB00-0CY0, 6EP4297-8HB00-0XY0, 6EP4297-8HB10-0XY0

10.4 EMC

	Basic devices **6EP3436-8SB00-2AY0** **6EP3437-8SB00-2AY0**	**Expansion modules** **6EP4436-8XB00-0CY0** **6EP4437-8XB00-0CY0**	**Buffer modules** **6EP4297-8HB00-0XY0** **6EP4297-8HB10-0XY0** **6EP4293-8HB00-0XY0** **6EP4295-8HB00-0XY0**
Generic standards	EN 61000-6-2 Interference immunity for industrial environments		
	EN 61000-6-3 Interference emission for residential areas		
Emitted interference	EN 55022 Class B		
Line harmonics limit	EN 61000-3-2 Class A		
Electrostatic discharge	EN 61000-4-2 8 kV contact, 8 kV air		
Electromagnetic fields	EN 61000-4-3 80 - 1000 MHz: 10 V/m 1.4 - 2.0 GHz: 10 V/m 2.0 - 2.7 GHz: 1 V/m		
High-speed transient disturbance variables (burst)	EN 61000-4-4 4 kV at line connections 2 kV at DC output		
Surge voltages	EN 61000-4-5 2 kV symmetrical at line connections 6 kV asymmetrical at the line supply connections 0.5 kV symmetrical/asymmetrical on DC output cables		
High-frequency fields	EN 61000-4-6 10 kHz - 80 MHz: 10 V/m		

Environmental conditions

11

	Basic devices 6EP3436-8SB00-2AY0 6EP3437-8SB00-2AY0	Expansion modules 6EP4436-8XB00-0CY0 6EP4437-8XB00-0CY0	Buffer modules 6EP4297-8HB00-0XY0 6EP4297-8HB10-0XY0 6EP4293-8HB00-0XY0 6EP4295-8HB00-0XY0
Ambient temperature	-25...+60 °C for natural convection 2 cm below the device Tested according to: • EN 60068-2-1 Cold • EN 60068-2-2 Dry heat • EN 60068-2-78 Humid heat, constant • EN 60068-2-14 Temperature change		
Transport and storage temperature	-40 ... 85 °C Tests (packed for shipping) according to: • EN 60068-2-1 Cold • EN 60068-2-2 Dry heat • EN 60068-2-30 Humid heat, cyclic		-40 ... 70 °C
Humidity class	Climatic class 3K3 according to EN 60721, without condensation		
Mechanical stressing during operation	Tested according to: • EN 60068-2-6 Vibration, test Fc: 3.5 mm deflection in the range 5 – 8.4 Hz 2 g acceleration in the range 8.4 – 150 Hz • EN 60068-2-27 Shock, test Ea: Acceleration 150 m/s^2, test duration 11 ms		
Damaging gases	Tested according to: • EN 60068-2-42 Sulfur dioxide • EN 60068-2-43 Hydrogen sulfide		
Air pressure	Operation: • 1080 - 795 hPa (-1000 - 2000 m) • Operation at installation altitudes of 2000 m up to 6000 m above sea level: output power must be derated by -7.5 % / 1000 m, or the ambient temperature must be reduced by 5 K / 1000 m (see Image 5-5 Mounting height derating (Page 98)) • Overvoltage category: II up to 2000 m (EN 60950-1) I from 2000 m up to 6000 m (EN 60950-1) Storage: • 1080 - 660 hPa (-1000 - 3500 m)		

Applications

12

12.1 Protection against brief power failures

For a drop in the line-side supply voltage, the SITOP PSU8600 power supply system still maintains the output voltage for a short time in the millisecond range (see Chapter Technical data (Page 219)).

For line supplies that manifest frequent brief voltage dips, in order to increase the power supply reliability, it may make sense to increase the line buffering time in the device using an additional buffer component.

The SITOP BUF8600 buffer module stores energy using electrolytic capacitors or double-layer capacitors - and allows the buffer time to be extended for power failures. The power supply system is integrated using an integrated connecting plug. A maximum of two buffer modules can be used within a system. For brief power failures, the outputs of the power supply system are supplied without interruption using the energy stored in the buffer module.

Depending on the type, for completely charged buffer modules, power failures of 100 ms, 300 ms, 4 s or 10 s for a load current of 40 A can be buffered; longer buffer times can be implemented using a second buffer module. The buffer time is correspondingly increased for lower load currents.

12.2 Protecting against longer power failures

Sudden and longer failures of the line supply voltage can result in undefined states and significant danger as a result of the associated failure of the plant or system control. In order to prevent failure of the 24 V supply voltage, in the product range of SITOP power supplies, various DC UPS solutions are available, where an output of the PSU8600 power supply system can be buffered for a longer period of time.

Using DC-UPS with various battery modules (lead acid accumulators), buffer times in the range of hours can be implemented. The innovative SITOP UPS1600 devices also offer new options when it comes to diagnostics and system integration. They have extensive functions, openly communicate via USB or Ethernet/PROFINET and are completely integrated in Totally Integrated Automation (TIA).

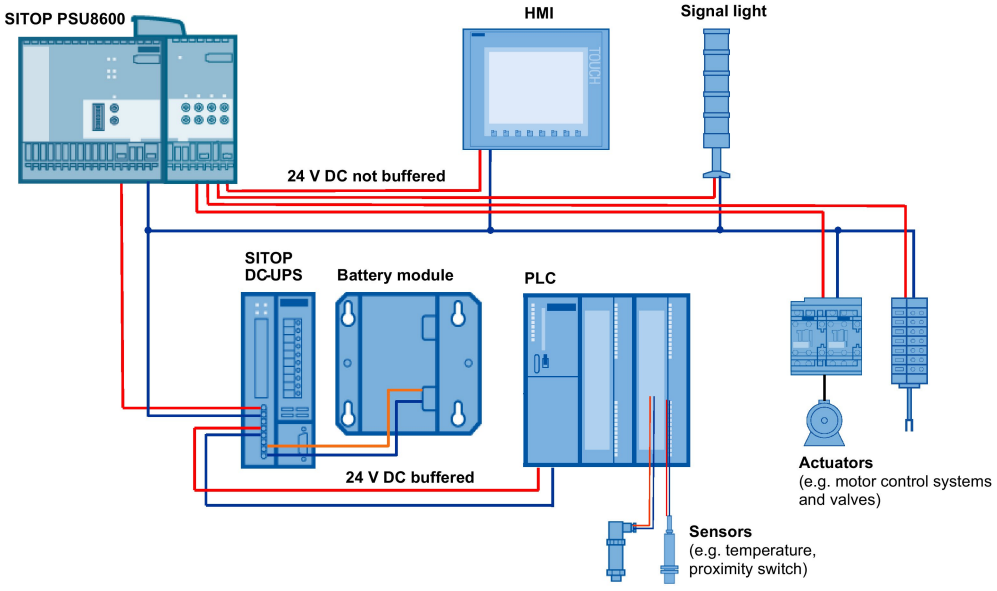

Using the free-of-charge SITOP DC-UPS software tool, DC-UPS systems can be simply integrated into PC-based automation solutions. This supports further processing of the status signals and safely running down the PC.

You can find additional information at:

Manual, DC UPS with batteries
(https://support.industry.siemens.com/cs/ww/en/ps/18043/man)

12.3 Parallel connection to increase power rating

To increase the power rating, two SITOP PSU8600 power supplies can be directly connected in parallel.

The following must be observed:

- The cables connected to each basic device at terminals "Output" and "0 V" must have, as far as possible, identical lengths and the same cable cross-sections (or the same impedance) up to a common external connection point (terminal strip).
- The basic devices connected in parallel must be switched on simultaneously with a common switch in the line feeder cable (e.g. with the main switch available in control cabinets).
- The output voltages measured in no-load operation for the basic devices that are not yet connected in parallel should not deviate more than a maximum of 50 mV. If the output voltages differ by more than this value, then the "0 V" terminals should be connected together, and in no-load operation the voltage difference between the "Output" terminals (that are still not connected with one another), measured and adjusted to be the same using the voltage potentiometer. The voltage difference should not exceed 50 mV.
- Select the "soft" output characteristic at selector switch "SOC1" of each basic device (see Setting the output characteristic (Page 69))

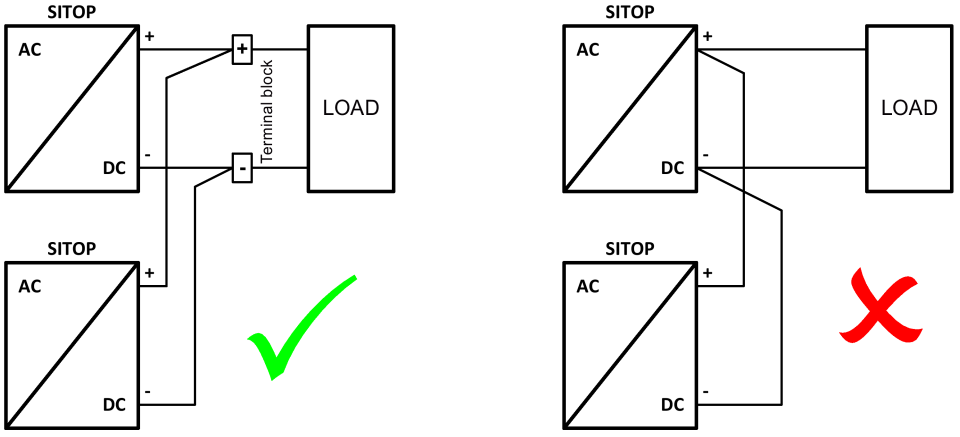

NOTICE
Protective circuit when convicting more than two basic devices in parallel When connecting more than two basic devices in parallel, additional measures must be taken to prevent high backward feeding currents in the event of a secondary device fault. For this purpose, a suitable protective circuit (e.g. decoupling diode or DC-capable circuit breaker) must be installed between each "Output" terminal of the basic devices and the common connection point.

12.4 Parallel connection for redundancy

Connecting several SITOP PSU8600 basic devices in parallel to create a redundant system is required if especially high requirements are placed on a very reliable 24-V supply.

When using the SITOP PSE202U redundancy module, two identical basic devices can be decoupled up to 20 A when operating with an output voltage 24 - 28 V. When one of the devices fails, then the other automatically takes over the supply. If one of the basic devices fails, then this is signaled using an LED on the redundancy module as well as an isolated relay contact.

For higher output current, each basic device must be connected to a redundancy module.

When dimensioning the system, it must be ensured that n+1 redundant connected basic devices can handle the total power requirement of the remaining n basic devices.

Note

For a high reliability of the supply, it is recommended that the basic devices connected in a redundant configuration are fused separately on the line-side and, if possible, connected to different power supply networks.

Redundant configuration with two power supplies and SITOP PSE202U redundancy module

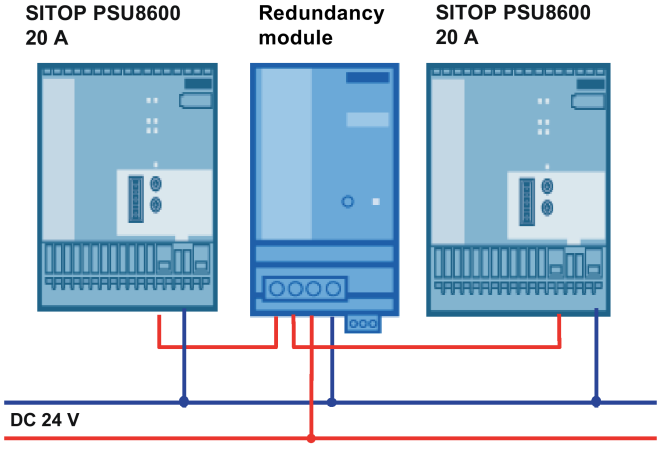

Redundant configuration with two power supplies and two SITOP PSE202U redundancy modules

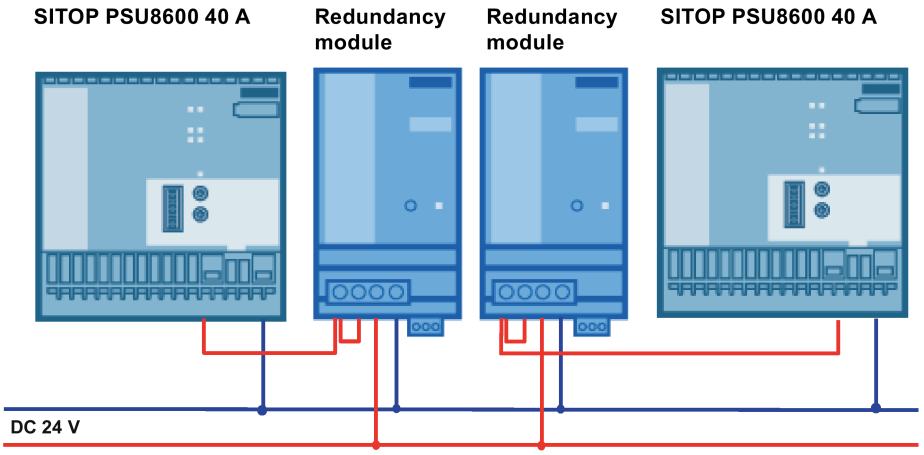

You can find additional information in the SITOP PSE202U manual (http://support.automation.siemens.com/WW/view/en/42248598)

Environment

13

The devices are in conformance with RoHS.

As a rule, only non-silicon precipitating materials are used.

Disposal guidelines



Packaging and packaging aids can and should always be recycled. The product itself may not be disposed of as domestic refuse.

Service & support

14

Technical support

Technical support for all IA/DT products can be accessed through the following communication channels:

- Phone: + 49 (0) 911 895 7222
- E-Mail (mailto:support.automation@siemens.com)
- Internet:
  Online support request form (http://www.siemens.de/automation/support-request)

Technical documentation on the Internet

Operating instructions and manuals for SITOP are available in the Internet:
Operating instructions/manuals (http://www.siemens.com/sitop/manuals)

SITOP power supply homepage

General news about our power supplies is available in the Internet at the SITOP homepage:
SITOP (http://www.siemens.com/sitop)

Information material

SITOP information can be downloaded from the Internet:
Information and download center (http://www.siemens.com/sitop-infomaterial)

CAx data

2D/3D data and circuit diagram macros can be downloaded from the Internet:
Siemens image database (http://www.siemens.com/sitop-cax)

Request all CAx data via the CAx download manager:
CAx shopping cart (http://www.siemens.com/cax)

SITOP Selection Tool

Simply and quickly select the optimum the power supply or DC-UPS:
SITOP Selection Tool (http://www.siemens.com/sitop-selection-tool)

Online catalog and ordering system

The online catalog and the online ordering system are available through the Industry Mall homepage:
Industry Mall (http://www.siemens.com/industrymall/de)

Contact persons

If you have any questions regarding the use of our products, then contact the Siemens contact person in your regional Siemens sales office.

You can find these addresses as follows:

- On the Internet (http://www.siemens.com/automation/partner)
- In Catalog CA 01