SIEMENS

Data sheet 3VL9300-3MQ00

accessory for VL160X, VL160, VL250 mot. op. mech. w/ strd en. mech 220...250V AC/DC

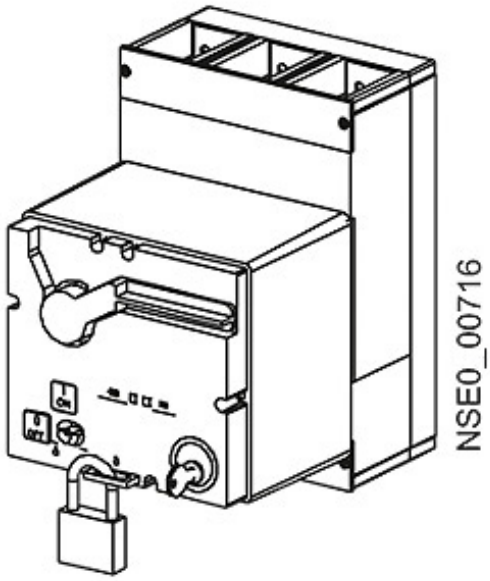

Model	
Product brand name	SENTRON
Product designation	Motorized operating mechanism with stored energy mechanism
Design of the product	Accessories for VL160X; VL160; VL250
Type of the driving mechanism	Motorized operating mechanism with spring energy store

General technical data	
Break time / typical	5 s
Pulse duration / minimum	50 ms
Operating frequency / maximum	120 1/h

Voltage	
Fuse protection type / for external auxiliary power supply / required	NEOZED fuse (gL/gG): 2 A / miniature circuit breaker, C char.: 2 A
Operating range factor control supply voltage rated value	
• at DC / initial value	0.85
• at DC / Full-scale value	1.1
• at AC / at 50 Hz / initial value	0.85
• at AC / at 50 Hz / Full-scale value	1.1

Subject to change without notice
© Copyright Siemens

• at AC / at 60 Hz / initial value	0.85
• at AC / at 60 Hz / Full-scale value	1.1

Protection class	
Protection class IP	IP30

Current	
Make time / typical	0.1 s

Control current	
Operating apparent output	100 V·A
Control supply voltage	
• at DC / rated value / minimum	250 V
• at DC / rated value / maximum	220 V
• at AC / at 50 Hz / rated value / minimum	220 V
• at AC / at 50 Hz / rated value / maximum	250 V
• at AC / at 60 Hz / rated value / minimum	220 V
• at AC / at 60 Hz / rated value / maximum	250 V

Accessories	
accessories	Accessories for VL160X; VL160; VL250

Connections	
Wire stripping length	10 mm
Connectable conductor cross-section / solid	
• minimum	0.75 mm²
• maximum	1.5 mm²
Connectable conductor cross-section / stranded	
• minimum	0.75 mm²
• maximum	1.5 mm²
Connectable conductor cross-section / finely stranded / with core end processing	
• minimum	0.75 mm²
• maximum	1.5 mm²
Tightening torque	
• minimum	1 N·m
• maximum	1.2 N·m

Mechanical Design	
Height	103 mm
Width	98 mm
Depth	166 mm
Net weight	2 818 g

Environmental conditions	
Ambient temperature / during operation	
• minimum	-25 °C

Subject to change without notice
© Copyright Siemens

• maximum	70 °C
Ambient temperature / during storage	
• minimum	-40 °C
• maximum	80 °C

Certificates

Reference code	
• acc. to DIN EN 61346-2	M
• acc. to DIN EN 81346-2	M

General Product Approval	EMC	Declaration of Conformity	Test Certificates	Shipping Approval	
Miscellaneous	C-Tick	EG-Konf.	Special Test Certificate	BUREAU VERITAS	PRS

Shipping Approval		other			
RINA	RMRS	Confirmation	Miscellaneous	Environmental Confirmations	Manufacturer Declaration

Further information

Information- and Downloadcenter (Catalogs, Brochures,…)
http://www.siemens.com/lowvoltage/catalogs

Industry Mall (Online ordering system)
https://mall.industry.siemens.com/mall/en/en/Catalog/product?mlfb=3VL9300-3MQ00

Service&Support (Manuals, Certificates, Characteristics, FAQs,...)
https://support.industry.siemens.com/cs/ww/en/ps/3VL9300-3MQ00

Image database (product images, 2D dimension drawings, 3D models, device circuit diagrams, ...)
http://www.automation.siemens.com/bilddb/cax_en.aspx?mlfb=3VL9300-3MQ00

CAx-Online-Generator
http://www.siemens.com/cax

Tender specifications
http://www.siemens.com/specifications

Subject to change without notice
© Copyright Siemens

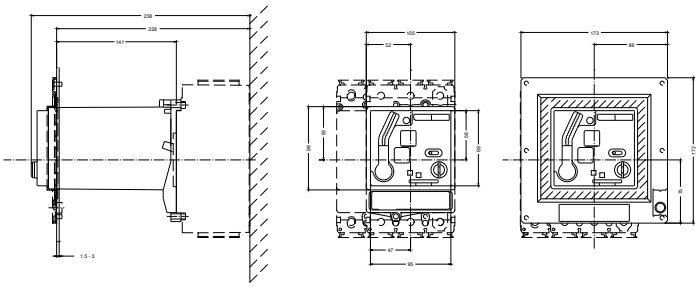

Subject to change without notice
© Copyright Siemens