SIEMENS

Data sheet 8WD4428-0BF

IO-Link adapter element, black, for 5 signaling elements, 24 V DC, diameter 70 mm



Product designation	IO-Link adapter element
General technical data	
Material	PC
Color	black
Outer diameter of the signal column element	70 mm
Degree of pollution	3
Consumed current maximum	6 mA
Protection class IP	IP65
Reference code acc. to DIN EN 81346-2	B
Reference code acc. to DIN EN 61346-2	B
Type of voltage of the operating voltage	DC
Operating voltage 1	
• at DC rated value	24 V
Communication/ Protocol	
Protocol is supported	
• IO-Link protocol	Yes
IO-Link transfer rate	COM2 (38,4 kBaud)
Point-to-point cycle time between master and IO-Link device minimum	10 ms

Subject to change without notice
© Copyright Siemens

Type of voltage supply via input/output link master	Yes
Amount data	
• of the address area of the inputs with cyclical transfer total	3 byte
• of the address area of the outputs with cyclical transfer total	1 byte

Inputs/ Outputs

Number of digital inputs/outputs	0
Number of digital inputs	0
• safety-related	0
Number of digital outputs	5

Installation/ mounting/ dimensions

Mounting type	Bayonet
Height	66 mm

Certificates/ approvals

General Product Approval	EMC	Declaration of Conformity	other
UL EAC RCM		Miscellaneous EG-Konf.	Confirmation

Further information

Information- and Downloadcenter (Catalogs, Brochures,…)
https://www.siemens.com/ic10

Industry Mall (Online ordering system)
https://mall.industry.siemens.com/mall/en/en/Catalog/product?mlfb=8WD4428-0BF

Cax online generator
http://support.automation.siemens.com/WW/CAXorder/default.aspx?lang=en&mlfb=8WD4428-0BF

Service&Support (Manuals, Certificates, Characteristics, FAQs,...)
https://support.industry.siemens.com/cs/ww/en/ps/8WD4428-0BF

Image database (product images, 2D dimension drawings, 3D models, device circuit diagrams, EPLAN macros, ...)
http://www.automation.siemens.com/bilddb/cax_de.aspx?mlfb=8WD4428-0BF&lang=en

Subject to change without notice
© Copyright Siemens

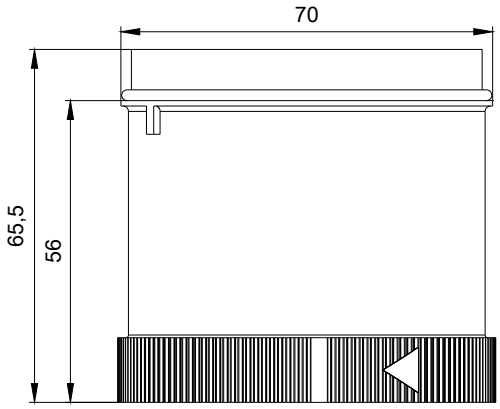

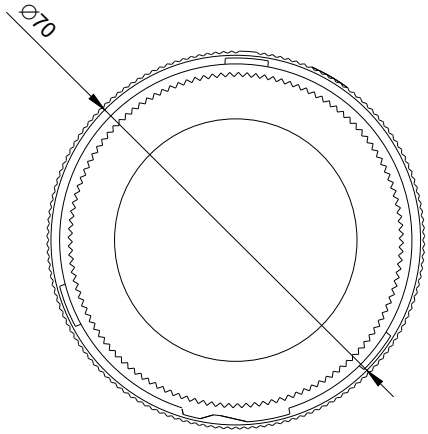

last modified: 05/06/2020

Subject to change without notice
© Copyright Siemens