SIEMENS

Ingenuity for life



BoltShield™ Surge Protective Devices

BSPD series for panelboards

www.siemens.ca/powerdistribution

Surge Protective Devices (SPDs) provide the best protection from both externally and internally generated surges when located as close to the building distribution system as possible. For cost and space reasons many buildings only include one SPD located at the main incoming panel and do not cascade SPDs throughout the building as recommended by IEEE. The new Siemens BSPD series of SPDs are economical and easy to install in most panels throughout a building so that whole facility protection can be obtained.

Features

- UL 1449 SPD Type 1*
- Monolithic distribution grade MOV
- Thermally protected MOV
- 100kA surge current protection per phase
- 20kA I-nominal ratings
- 200kA SCCRs
- 10 year standard warranty
- Form C dry contact, 240V AC, 1A max, 48V DC, 0.5A max
- Audible Alarm

Product specifications

General specifications	
Maximum surge current rating range	100 kA per phase
UL Type designation	SPD Type 1*
UL 1449 I-nominal rating	20kA
UL 1449 short circuit current rating	200kA
Repetitive impulse	5,000 hits
Response time	<1 ns

Physical specifications		
Humidity range		0-95% non-condensing
Operating frequency		0-415Hz
Operating temperature		-25°C to +60°C
Dimensions in inches (mm)	2 pole	3 (79.5) x 2 (50.1) x 2.6 (71.5)
	3 pole	3 (79.5) x 3 (75.2) x 2.8 (71.5)
Weight	2 pole	0.64 lb (291 g)
	3 pole	1.0 lb (450 g)
Neutral/ground connection		#14 AWG (pre-wired)

Diagnostic monitoring specifications
Green/red visual mechanical flag failure indicators
Flashing dual colour LED (green/red) status indicator
Audible alarm w/ silence switch/button
Form C dry contact, 240V AC, 1A max, 48V DC, 0.5A max

Design specifications
Monolithic distribution grade MOV
Integrated optimized thermal protection
Fits in footprint of BL/BQD, or xGB/3VA41**
Modes of protection (L-N or L-G, L-L)

*Type 1 SPDs suitable for use in Type 2 applications.

** Each SPD comes with an adapter for xGB/3VA41 applications. Replacement adapterkit BSPDXGB1 is available, containing 2 and 3 pole adapters (1 each).

UL 1449 performance data and ordering information							
System voltage	L-N (L-G)	L-L	I_n	SCCR	MCOV	Catalog numbers	Siemens breaker form factor
120/240V, 1Ø, 3W	600V	900	20kA	200kA	150V	BSPD2A100**	2-P, BL/BQD or NGB/3VA41
240/120V, 3Ø, 4W	600V/800V	1200	20kA	200kA	150V	BSPD3B100	3-P, BL/BQD or NGB/3VA41
208Y/120V, 3Ø, 4W	600V	900	20kA	200kA	150V	BSPD3C100	3-P, BL/BQD or NGB/3VA41
240V, 3Ø, 3W	800V	1500	20kA	200kA	280V	BSPD3D100	3-P, BL/BQD or NGB/3VA41
480Y/277V, 3Ø, 4W	1000V	1800	20kA	200kA	320V	BSPD3E100	3-P, BL/BQD or NGB/3VA41
480V, 3Ø, 3W	1800V	3000	20kA	200kA	550V	BSPD3F100	3-P, BL/BQD or NGB/3VA41
600V, 3Ø, 3W	2000V	4000	20kA	200kA	700V	BSPD3G100	3-P, BL/BQD or NGB/3VA41
380Y/220V, 3Ø, 4W	900V	1800	20kA	200kA	320V	BSPD3K100	3-P, BL/BQD or NGB/3VA41
600Y/347V, 3Ø, 4W	1200V	2500	20kA	200kA	400V	BSPD3L100	3-P, BL/BQD or NGB/3VA41
400Y/230V, 3Ø, 4W	900V	1800	20kA	200kA	320V	BSPD3S100	3-P, BL/BQD or NGB/3VA41
415Y/240V, 3Ø, 4W	900V	1800	20kA	200kA	320V	BSPD3T100	3-P, BL/BQD or NGB/3VA41

**Can also be used on 208Y/120V, 1Ø, 3W System.

Standards compliance and certifications
UL 1449 4th Edition, cUL, UL1283, UL 96A Compliant, ANSI/IEEE C62.41.1-2002, C62.41.2-2002, C62.45-2002, NEC Article 285
ISO 9001:2014 Quality Management System, 100% Quality Tested prior to shipping

Catalog number logic

BSPD - 2 - A - 100

Series	Poles	Voltage Code	Surge Current Rating
BSPD	2 = 2 Pole	A = 120/240V, 1Ø 3W (Fig.1)**	100 = 100kA per Mode/Phase
	3 = 3 Pole	B = 240/120V, 3Ø 4W (Fig.3)	
		C = 208Y/120V, 3Ø 4W (Fig.2)	
		D = 240V, 3Ø 3W (Fig.4)	
		E = 480Y/277V, 3Ø, 4W (Fig.1)	
		F = 480V, 3Ø, 3W (Fig.4)	
		G = 600V, 3Ø, 3W (Fig.4)	
		K = 380Y/220V, 3Ø, 4W (Fig.1)	
		L = 600Y/347V, 3Ø, 4W (Fig.1)	
		S = 400Y/230V, 3Ø, 4W (Fig.1)	
		T = 415Y/240V, 3Ø, 4W (Fig.1)	

**Can also be used on 208Y/120V, 1Ø, 3W system

Benefits of installing multiple BSPDs

Adding multiple BSPDs in a single panelboard can increase modes of protection and a surge capacity. See the BoltShield brochure for more details and review an example chart below:

Number of BSPDs	Connection	Modes of protection	Surge current capacity per mode	Surge current capacity per phase
1	Neutral	3	100kA	100kA
2	Neutral + Ground	6	100kA	200kA
2	Neutral(2)	3	200kA	200kA
3	Neutral(2) + Ground(1)	6	200kA(L-N) + 100kA (L-G)	300kA
3	Ground(3)	3	300kA	300kA
4	Neutral(2) + Ground(2)	6	200kA	400kA

Wiring configurations

Split

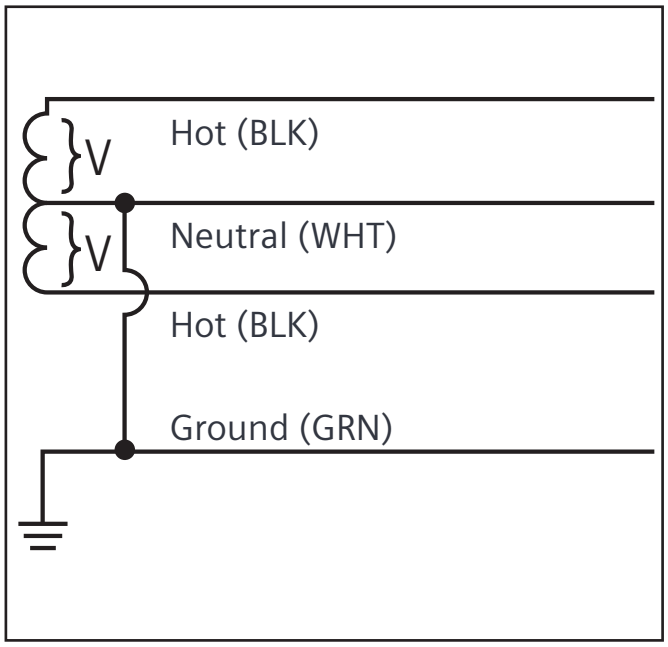

Figure 1
2 Hots, 1 Neu, 1 Grnd

WYE

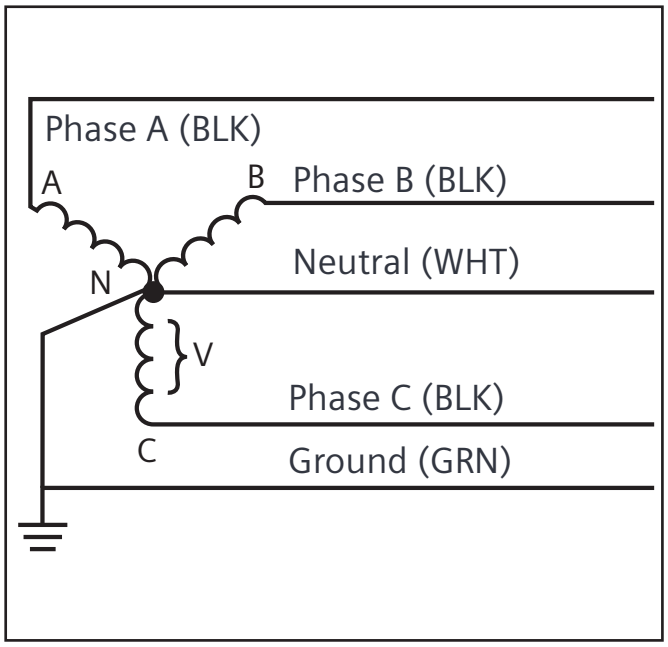

Figure 2
3 Hots, 1 Neu, 1 Grnd

Hi-Leg Delta (B High)

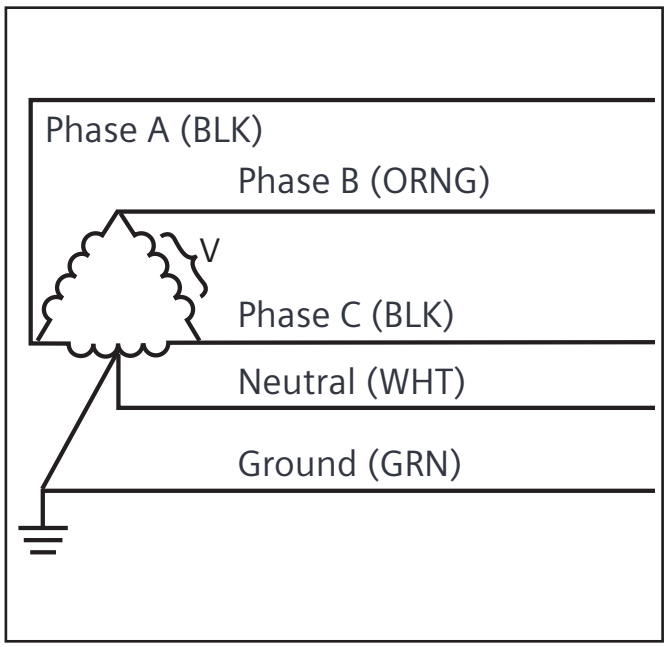

Figure 3
3 Hots (B High), 1 Neu, 1 Grnd

Delta & HRG WYE

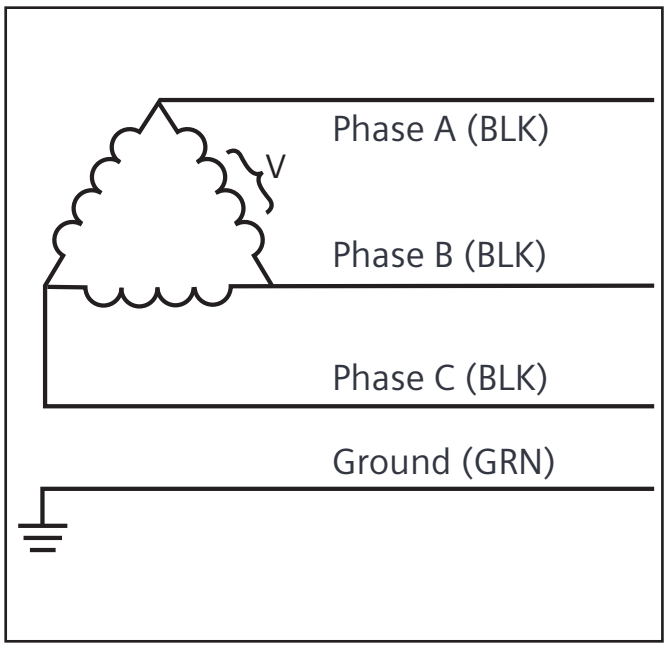

Figure 4
3 Hots, 1 Grnd

Product diagrams (in millimeters)

2-Pole: BSPD2A100

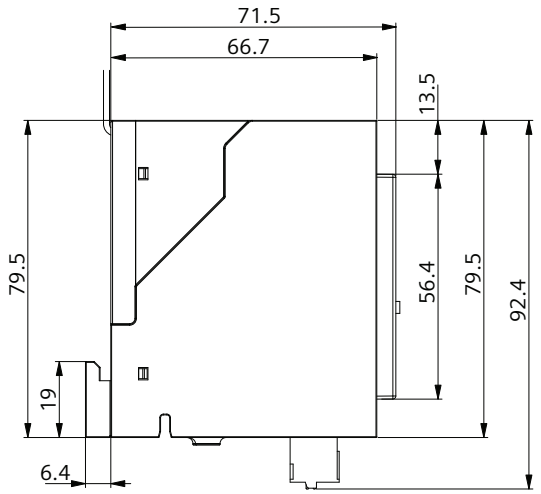

SIDE

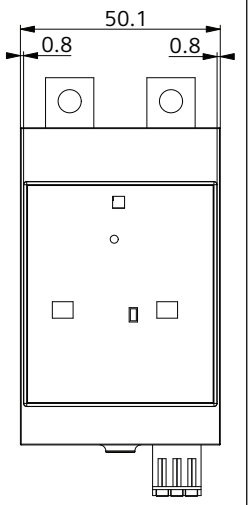

FRONT

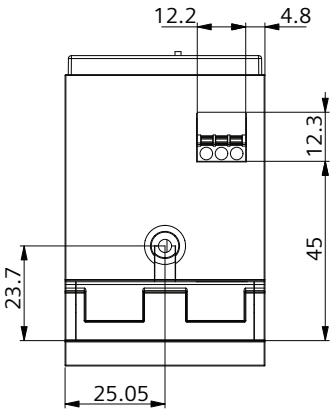

BOTTOM

3-Pole: BSPD3x100

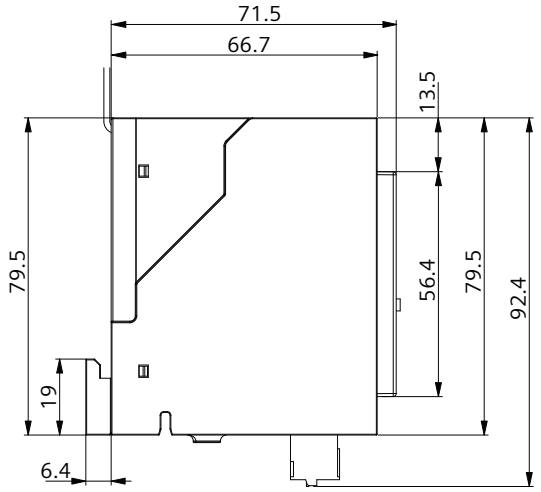

SIDE

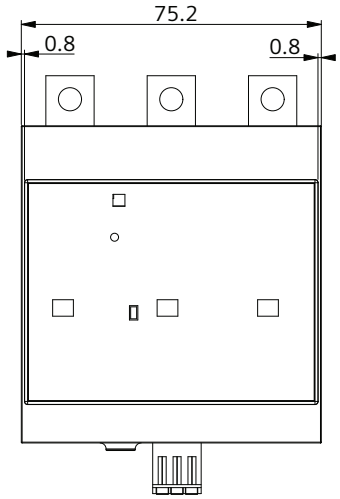

FRONT

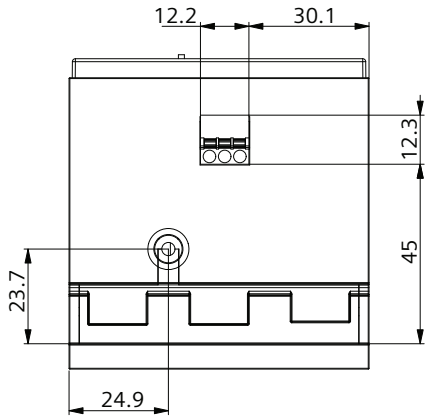

BOTTOM

Published by
Siemens Canada Limited

Electrical Products
1577 North Service Road East
Oakville, ON L6H 0H6

Customer Interaction Centre
(888) 303-3353
cic.ca@siemens.com

Printed in Canada
Order No. SI-EP-1688
All Rights Reserved
© 2020, Siemens Canada Limited

www.siemens.ca/powerdistribution

The technical data presented in this document is based on an actual case or on as-designed parameters, and therefore should not be relied upon for any specific application and does not constitute a performance guarantee for any projects. Actual results are dependent on variable conditions. Accordingly, Siemens does not make representations, warranties, or assurances as to the accuracy, currency or completeness of the content contained herein. If requested, we will provide specific technical data or specifications with respect to any customer's particular applications. Our company is constantly involved in engineering and development. For that reason, we reserve the right to modify, at any time, the technology and product specifications contained herein.