SIEMENS

Data sheet 3VT1716-2DE36-0AA0

switch disconnector 3VT1 3-pole; switch disconnector In=160A rated current without auxiliary release without auxiliary/alarm switch



Model	
Product brand name	SENTRON
Design of the operating mechanism	toggle handle
Type of the driving mechanism / motor drive	No

General technical data	
Type of device	fixed mounting
Size of the circuit-breaker	3VT1
Mechanical service life (switching cycles) / typical	20 000
Degree of pollution	3
Insulation voltage / rated value	690 V
Surge voltage resistance / rated value	8 kV
Operating current / at AC / rated value	160 A
Operating voltage	
• at AC / at 50/60 Hz / rated value	690 V
• at DC / rated value	250 V
Protection class IP	IP40
Protection class IP / on the front	IP40
Power loss [W]	

Subject to change without notice
© Copyright Siemens

• for rated value of the current / at AC / in hot operating state / per pole	15 W
Continuous current / rated value	160 A
Operating current / at DC / rated value	160 A
Short-time withstand current (Icw) / limited to 1 s / rated value	2 kA
Operating current / rated value	160 A
Number of CO contacts / for auxiliary contacts	0
Number of NC contacts / for auxiliary contacts	0
Number of NO contacts / for auxiliary contacts	0
Suitability for integration / Distribution board	Yes
Suitability for use	
• Main switch	Yes
• switch disconnector	Yes
• EMERGENCY OFF switch	No
• safety switch	No
• maintenance/repair switch	Yes
Color / of the actuating element	black
Product feature / interlock	No
Product component	
• Trip indicator	No
• Voltage trigger	No
• undervoltage release	No
• undervoltage release with leading contact	No
Product extension / Auxiliary switch	No
Product extension / optional	
• motor drive	Yes
• Voltage trigger	Yes

Short circuit

Short-circuit current making capacity (Icm) / for switch disconnector	
• without fuse link / rated value / minimum	2.83 kA
Arrangement of electrical connectors / for main current circuit	front side
Type of electrical connection / for main current circuit	box terminal

Mechanical Design

Depth	80 mm
Mounting type	fixed mounting
Mounting position	with vertical mounting surface +/-180° rotatable, with vertical mounting surface +/- 30° tiltable to the front and back
Ambient temperature / during operation	
• minimum	-40 °C

Subject to change without notice
© Copyright Siemens

• maximum	55 °C
Ambient temperature / during storage / minimum	-40 °C
Reference code	
• acc. to DIN EN 61346-2	Q
• acc. to DIN EN 81346-2	Q

General Product Approval	Declaration of Conformity	Test Certificates	other	
 CCC	 EG-Konf.	Type Test Certificates/Test Report	Miscellaneous	Manufacturer Declaration

Further information

Information- and Downloadcenter (Catalogs, Brochures,…)
http://www.siemens.com/lowvoltage/catalogs

Industry Mall (Online ordering system)
https://mall.industry.siemens.com/mall/en/en/Catalog/product?mlfb=3VT1716-2DE36-0AA0

Service&Support (Manuals, Certificates, Characteristics, FAQs,...)
https://support.industry.siemens.com/cs/ww/en/ps/3VT1716-2DE36-0AA0

Image database (product images, 2D dimension drawings, 3D models, device circuit diagrams, ...)
http://www.automation.siemens.com/bilddb/cax_en.aspx?mlfb=3VT1716-2DE36-0AA0

CAx-Online-Generator
http://www.siemens.com/cax

Tender specifications
http://www.siemens.com/specifications

Subject to change without notice
© Copyright Siemens

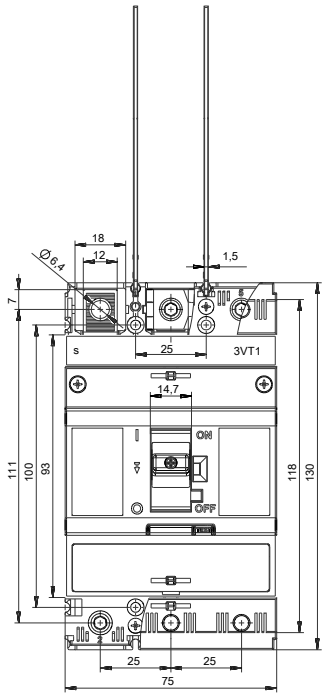

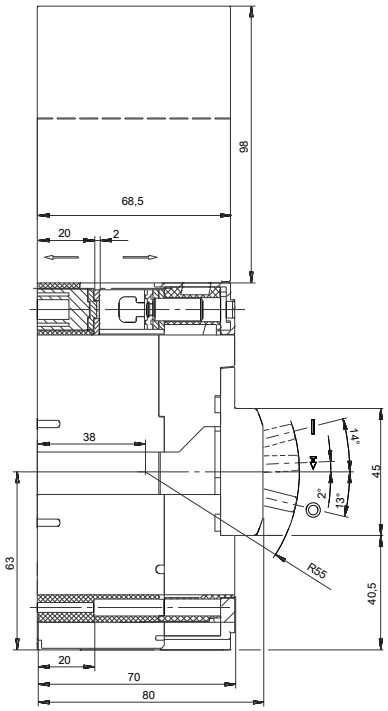

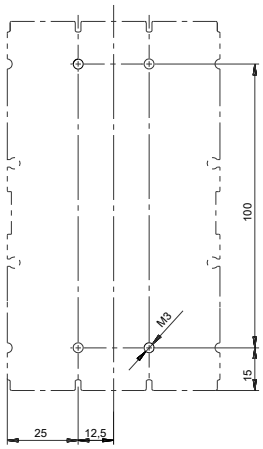

Subject to change without notice
© Copyright Siemens

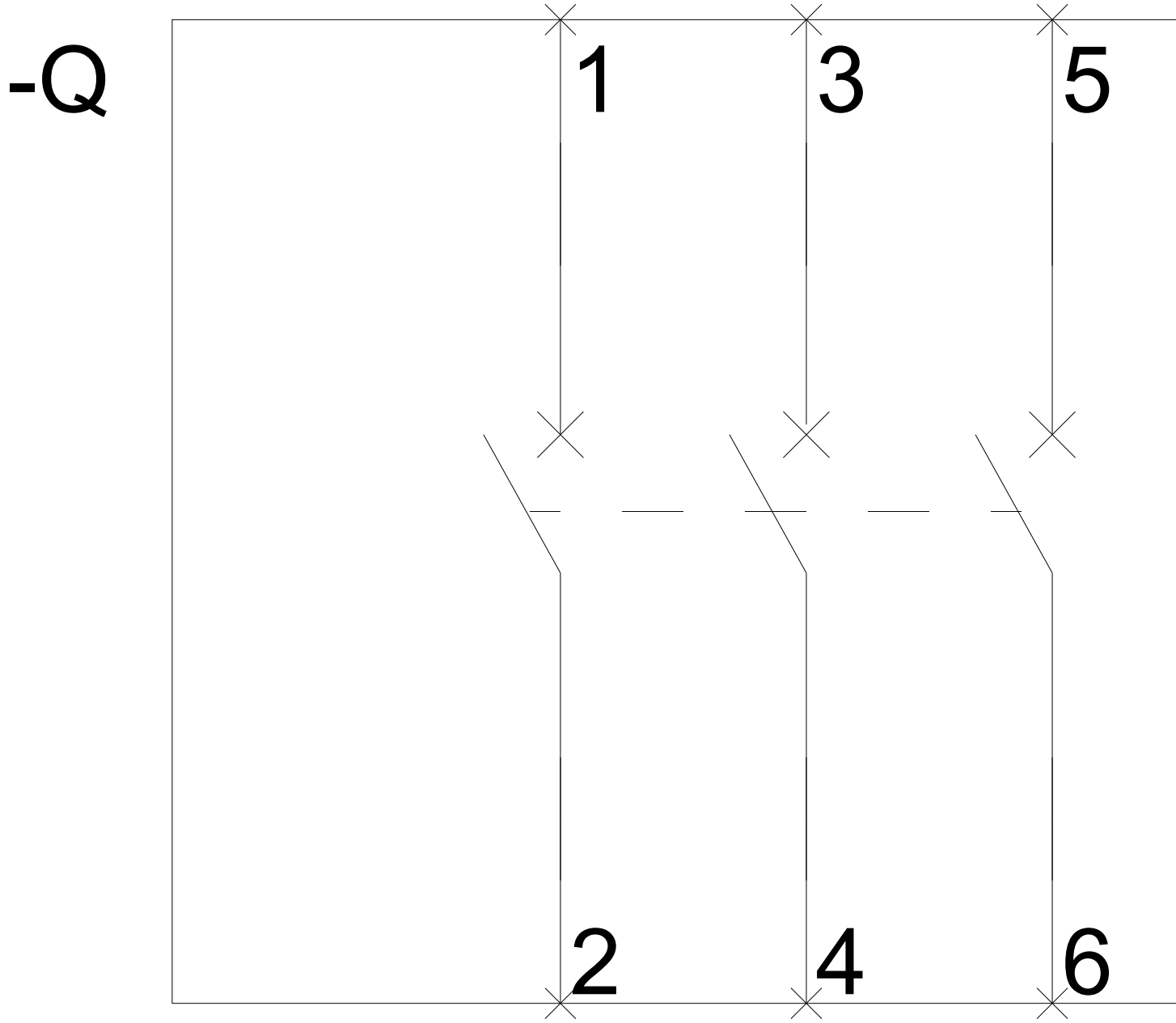

Subject to change without notice
© Copyright Siemens

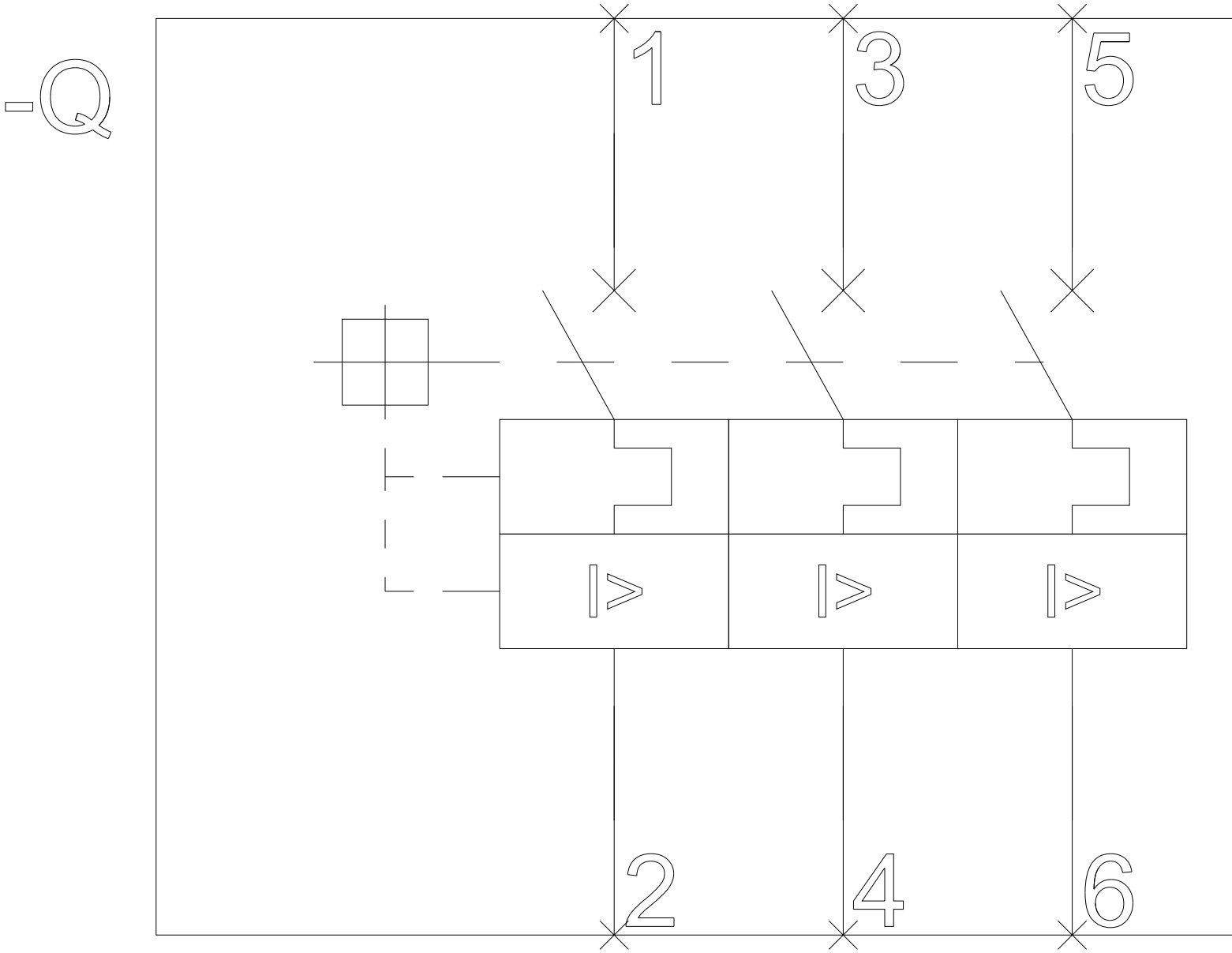

Subject to change without notice
© Copyright Siemens

Subject to change without notice
© Copyright Siemens