Circuit Breakers

Main and Branch Circuit Breakers①

Selection

Breaker Type	Ampere Rating	Catalog Number	Catalog Number	UL Interrupting Ratings (kA)
QN 2-Pole 120/240V AC	150	**QN2150**	**QN2150R**②	10
	175	**QN2175■**	**QN2175R**②**■**	10
	200	**QN2200**	**QN2200R**②	10
QNH 2-Pole 120/240V AC	150	**QN2150H**	**QN2150RH**②	22
	175	**QN2175H■**	**QN2175RH**②**■**	22
	200	**QN2200H**	**QN2200RH**②	22
HQN 2-Pole 120/240V AC	150	**HQN2150**	**HQN2150R**②	65
	175	**HQN2175■**	—	65
	200	**HQN2200**	**HQN2200R**②	65

Requires 4 panel spaces, 2 adjacent and 2 opposite. **SHIPPING:** 1 per carton (Wt. 3 lbs.)



QNR⑤ **QN**⑤

Main Breaker Kits

For use in Ultimate Load Centers④			For use in EQIII Load Centers			
UL Type	Ampere Rating	Catalog Number	UL Type	Ampere Rating	Catalog Number	UL Interrupting Ratings (kA)
EQ8681	100	**MBK100A**	EQ9675	100	**MBK100**	22
EQ8682	125	**MBK125A**	EQ9677	125	**MBK125**	22
EQ8693	150	**MBK150A**	EQ9683	150	**MBK150**	22
—	—	—	EQ9684	175	**MBK175■**	22
EQ8695	200	**MBK200A**	EQ9685	200	**MBK200**	22
EQ8696	225	**MBK225A**	EQ9686	225	**MBK225**	22

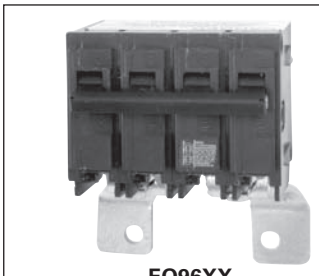

EQ96XX

Breaker Type	Ampere Rating	Catalog Number	UL Interrupting Ratings (kA)
QPJ③ 3-Pole 240V AC	125	**QPJ3125**	10
	150	**QPJ3150**	10
	200	**QPJ3200**	10

Requires 6 spaces due to cross over design. Fits only EQIII 125-400A 3-phase load centers

SHIPPING: 5 per carton (Wt. 17 lbs.)

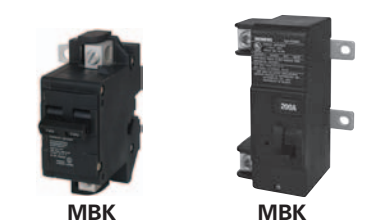

MBK (100,125)A **MBK** (150,200,225)A

Breaker Type	Ampere Rating	Catalog Number	UL Interrupting Breaker Ratings (kA) Volts AC 120/240
QPP 2-Pole 120/240V AC	125	**Q2125B**	10
	150	**Q2150B**	10
	175	**Q2175B■**	10
	200	**Q2200B**	10
	225	**Q2225B**	10
QPPH 2-Pole 120/240V AC	125	**Q2125BH**	22
	150	**Q2150BH**	22
	175	**Q2175BH■**	22
	200	**Q2200BH**	22
	225	**Q2225BH■**	22
HQPP 2-Pole 120/240V AC	125	**Q2125BHH■**	65
	150	**Q2150BHH**	65
	175	**Q2175BHH■**	65
	200	**Q2200BHH**	65
	225	**Q2225BHH■**	65
HQPPH 2-Pole 120/240V AC	100	**HQ2100BH■**	100
	125	**HQ2125BH■**	100
	150	**HQ2150BH■**	100
	175	**HQ2175BH■**	100
	200	**HQ2200BH■**	100
	225	**HQ2225BH■**	100

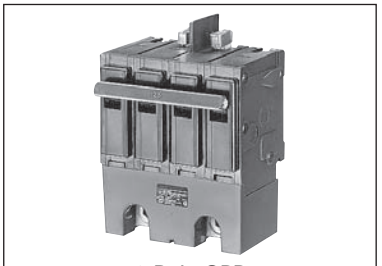

2-Pole **QPP**

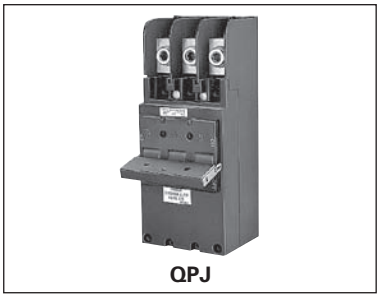

QPJ

7 MOLDED CASE CIRCUIT BREAKERS

For inches / millimeters conversion, see Application Data section.
■ Built to order. Allow 2–3 weeks for delivery.

① All circuit breakers on this page are common trip.
② Reverse handle.
③ CSA Listed.
④ MBK100A for use in 100 and 125A load centers.
MBK125A for use in 125A load centers.
MBK150A for use in 150, 200 and 225A load centers.
MBK200A for use in 200 and 225A load centers.
MBK225A for use in 225A load centers.
MBK175A for use in 200 and 225A load centers.

⑤ QNR required for horizontal applications or vertical applications where the lugs are facing up. The QN breaker is required for vertical applications where the lugs are facing down as shown.

Circuit Breakers

Line Diagrams

Dimension Drawings

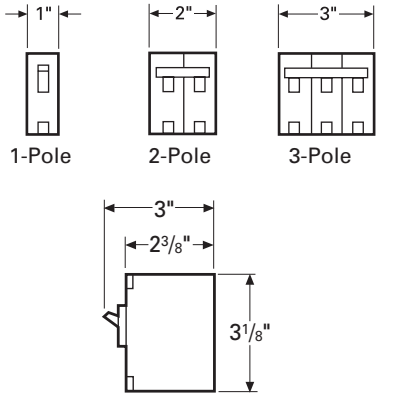

QP, QPH, HQP

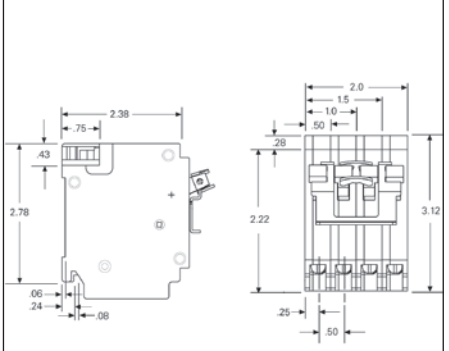

Type **QT**

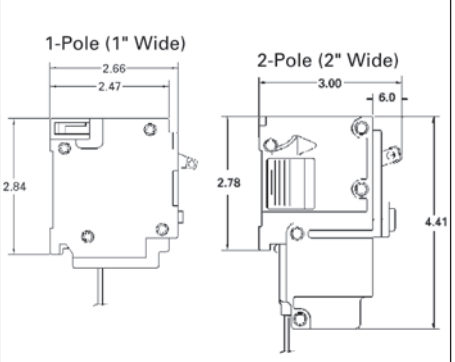

Type **QPF, QPHF, QE, QAF2, QAF2H**

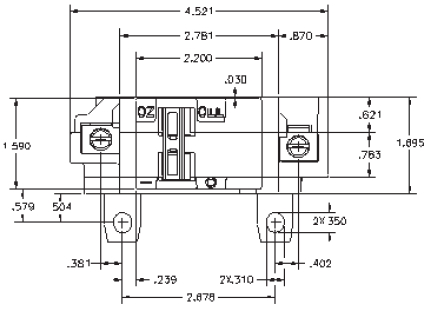

Type **EQ8681, EQ8682**

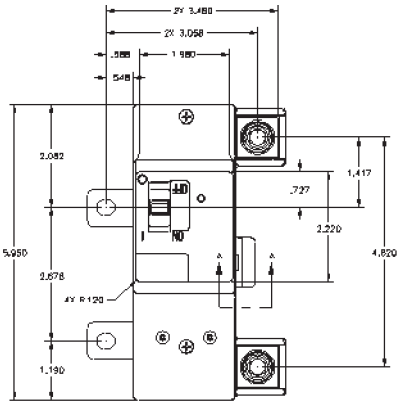

Type **EQ8693, EQ8695, EQ8696**

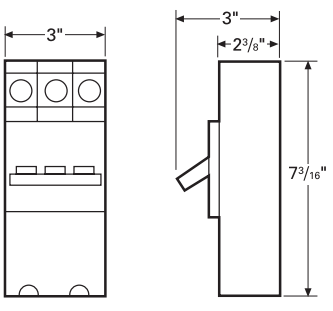

Type **QPJ**

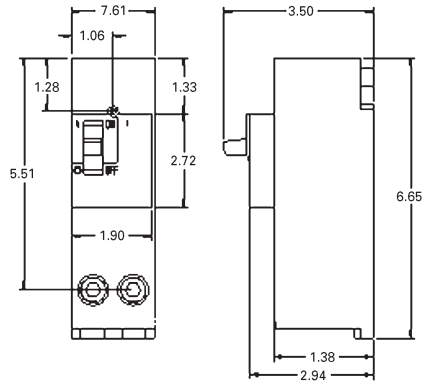

Type **QN, QNH, HQN**

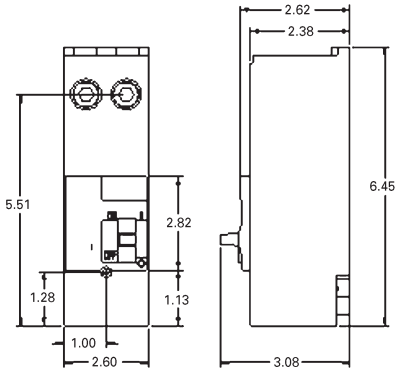

Type **QNR, QNRH, HQNR**

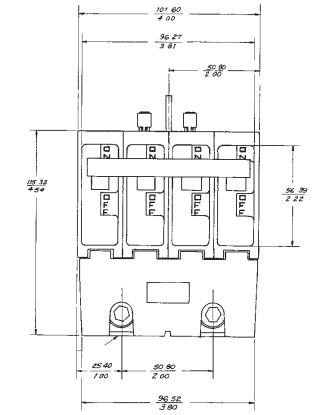

Type **QPP, QPPH, HQPP, HQPPH**

① All standard circuit breakers are calibrated to 40°C maximum ambient application.

Circuit Breakers

Lug Data

Reference

Circuit Breaker Type	Circuit Breaker Ampere Rating	Cables Per Connector	Connector Wire Range
	LOAD SIDE		
QP, QPH, HQP, Plug-in	10	2	#14-#16 AWG Cu
	15–35	1 1	#14–#6 AWG Cu #14–#6 AWG Al
	40–50	1 1	#8–#6 AWG Cu #8–#4 AWG Al
	55-125	1 1	#8-#2/0 AWG Cu #8-#2/0 AWG Al
QT	15–35	1 1	#14–#6 AWG Cu #14–#6 AWG Al
	40	1	#8 AWG CU-Al
	40–50	1 1	#8–#6 AWG Cu #8–#4 AWG Al
QPF, QPHF	15–30	1 1	#14–#10 AWG Cu #12–#8 AWG Al
	40–60	1 1	#8–#6 AWG Cu #8–#4 AWG Al
QAF2, QAFH2, QFGA2, QFGAH2	15–20	1 1	#14–#12 AWG Cu #12–#10 AWG Al
QD	15–20	2	#14–#8 AWG Cu Only
	15–20	1 1	#14–#12 AWG Cu #12–#10 AWG Al
	25–35	1 1	#10–#8 AWG Cu #10–#6 AWG Al
	40–60	1 1	#8–#6 AWG Cu #8–#4 AWG Al
QN, QNH, HQN	150–200	1	#1–300kcmil Cu-Al
QS, QSH, QSHH, HQS, HQSH	100–225	1	#3–300kcmil Cu-Al
EQ8681-Ultimate	100	1	#4–3/0 AWG Cu-Al
EQ8682-Ultimate	125	1	#4–3/0 AWG Cu-Al
EQ8693-Ultimate	150	1	#1–300kcmil Cu-Al
EQ8695-Ultimate	200	1	#1–300kcmil Cu-Al
EQ8696-Ultimate	225	1	#1–300kcmil Cu-Al
QPP, QPPH, HQPP, HQPPH	125	1 1	#1 AWG Cu #2/0 AWG Al
	150	1 1	#1/0 AWG Cu #3/0 AWG Al
	175	1 1	#2/0 AWG Cu #4/0 AWG Al
	200	1 1	#3/0 AWG Cu 250kcmil AWG Al
	225	1 1	#4/0 AWG Cu 300kcmil AWG Al
EQ9675-EQIII	100	1 1	#8-#2/0 AWG Cu #8-#2/0 AWG Al
EQ9677-EQIII	125	1 1	#8-#2/0 AWG Cu #8-#2/0 AWG Al
EQ9683-EQIII	150	1 1	#1/0 AWG Cu #3/0 AWG Al
EQ9684	175	1 1	#3/0 AWG Cu 250kcmil AWG AL
EQ9685-EQIII	200	1 1	#3/0 AWG Cu 250kcmil AWG Al
EQ9686-EQIII	225	1 1	#4/0 AWG Cu 300kcmil AWG Al
QPJ	125–200	1	#2–300kcmil Cu-Al