SIEMENS

Data Sheet

VBII Heavy Duty Safety Switch

800A, 240-600V, Type 3R

usa.siemens.com/switches

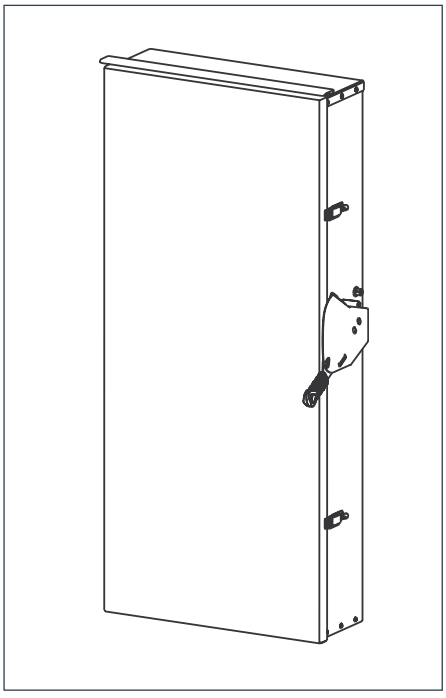

Standards and Ratings

- UL Listed under file #E4776
- Meets UL98 for switches and UL 50 for enclosures
- Meets NEMA Standard KS-1 for enclosed switches
- Rated 200,000 AIC as standard with Class L or T fuses
- Suitable for use as service entrance equipment

Features

- Quick-make and break switching action
- Visible blade design
- Highly visible ON/OFF indication
- Rugged installer friendly enclosure design
- Modular design allows quick and easy replacement of parts
- Defeatable dual cover interlock
- Viewing windows for "Off" visual confirmation with door closed

Product Specifications

Heavy Duty 800A, 240-600V Type 3R

General Information

Catalog Number	Volts	Description	Shipping Weight (lbs.)
HF227NR [1]	240	2 Pole, 3 Wire, Fusible	365
HF327NR [1]	240	3 Pole, 4 Wire, Fusible	375
HF367R	600	3 Pole, 3 Wire, Fusible	365
HF367NR	600	3 Pole, 4 Wire, Fusible	375
HF367NRW [2]	600	3 Pole, 3 Wire, Fusible, Viewing Window	365

Horsepower Ratings [3] – 240 Volts

Catalog Number	1 Phase, 240V AC		3 Phase, 240V AC		250V DC
	Std	Max	Std	Max	
HF227NR	—	—	100	250	—
HF327NR	—	—	100	250	—

Horsepower Ratings [3] – 600 Volts

Catalog Number	3 Phase, 480V AC		3 Phase, 600V AC		600V DC
	Std	Max	Std	Max	
HF367R	200	500	250	500	—
HF367NR	200	500	250	500	—
HF367NRW	200	500	250	500	—

Mechanical Lug Wire Range (75°C, Cu/Al)

Description	Wire Range
Line, Load	(3) 1/0 AWG - 750 Kcmil (6) 1/0 AWG - 250 Kcmil
Neutral	(4) 1/0 AWG - 750 Kcmil
Ground	(4) #6 AWG - 250 Kcmil

Accessories

Catalog Number	Description
HA165678	One Normally Open and Closed Auxiliary Switches
HA265678	Two Normally Open and Closed Auxiliary Switches
HA365678	Low Voltage Auxiliary Switch
HG678	Equipment Ground Lug Kit
HN678	Neutral Kit
[4]	Copper Lug Kit (1 lug per kit)
[5]	Compression Lug Mounting Kit (2 kits/pole required allows (4) lugs/Ø)
HV250	2.50" Type "HV" Outdoor Hub
HV300	3.00" Type "HV" Outdoor Hub
HV350	3.50" Type "HV" Outdoor Hub
HV400	4.00" Type "HV" Outdoor Hub

Replacement Parts

Catalog Number	Description
HFB67A [6 7]	Fusible Line Side Replacement Base
HBB67A [6 7]	Fusible Load Side Replacement Base
HH65678	Replacement Handle/Handle Guard
HM67	Replacement Mechanism
[8]	Replacement Door
HL67 [9]	Replacement Lugs

Compression Lugs (Factory Installed mounting kit HCL67T for top and HCL68T for bottom required)

Wire Size	Burndy		Thomas-Betts		Ilsco	
	CU Only	CU/AL	CU Only	CU/AL	CU Only	CU/AL
2/0	YA26-N	YA26-A1	54160 54951BE	—	—	IACL-2/0 ACN-2/0
3/0	YA27-L Box YA27	YA27A3	54165-TB 54965BE	—	CRB-3/0 CRB-3/0L	IACL-3/0 ACN-3/0
4/0	YA28-L Box YA28	YA28A3	54170 54970BE	60150	CRB-4/0 CRB-4/0L	IACL-4/0 ACN-4/0
250 Kcmil	YA29-L Box YA29	YA29A1	54113 54913BE	61156 60156	CRA-250 CRA-250L	IACL-250 ACL-250
300 Kcmil	YA30-L YA30	YA30A1	54114 54914BE	61162 60162	CRA-300 CRA-300L	IACL-300 ACL-300
350 Kcmil	YA31-L YA31	YA31A1	54915BE	61165 60165	CRA-350 CRA-350L	IACL-350 ACL-350
400 Kcmil	YA32-N	—	54116 54916BE	—	—	—
500 Kcmil	YA34-L6 YA34-N	—	—	61171	—	IACL-500

1 These switches are UL Listed for application on grounded B phase systems.
2 "W" in catalog number suffix indicates switch with Viewing windows.
3 Dual horsepower ratings: Std - applies when non-time delay fuses are installed.
Max - applies when time-delay fuses are installed.
4 Catalog number HLC65678 factory installed only.
5 Catalog number HCL65678 factory installed only.
6 Each Line and Load Replacement Base contains one pole.
7 Lugs are provided on the Replacement Base Assembly.
8 Place "DOORA" at the end of the switch catalog number.
9 One required per pole for either line or load.

Dimension Drawings

Heavy Duty 800A, 240-600V Type 3R

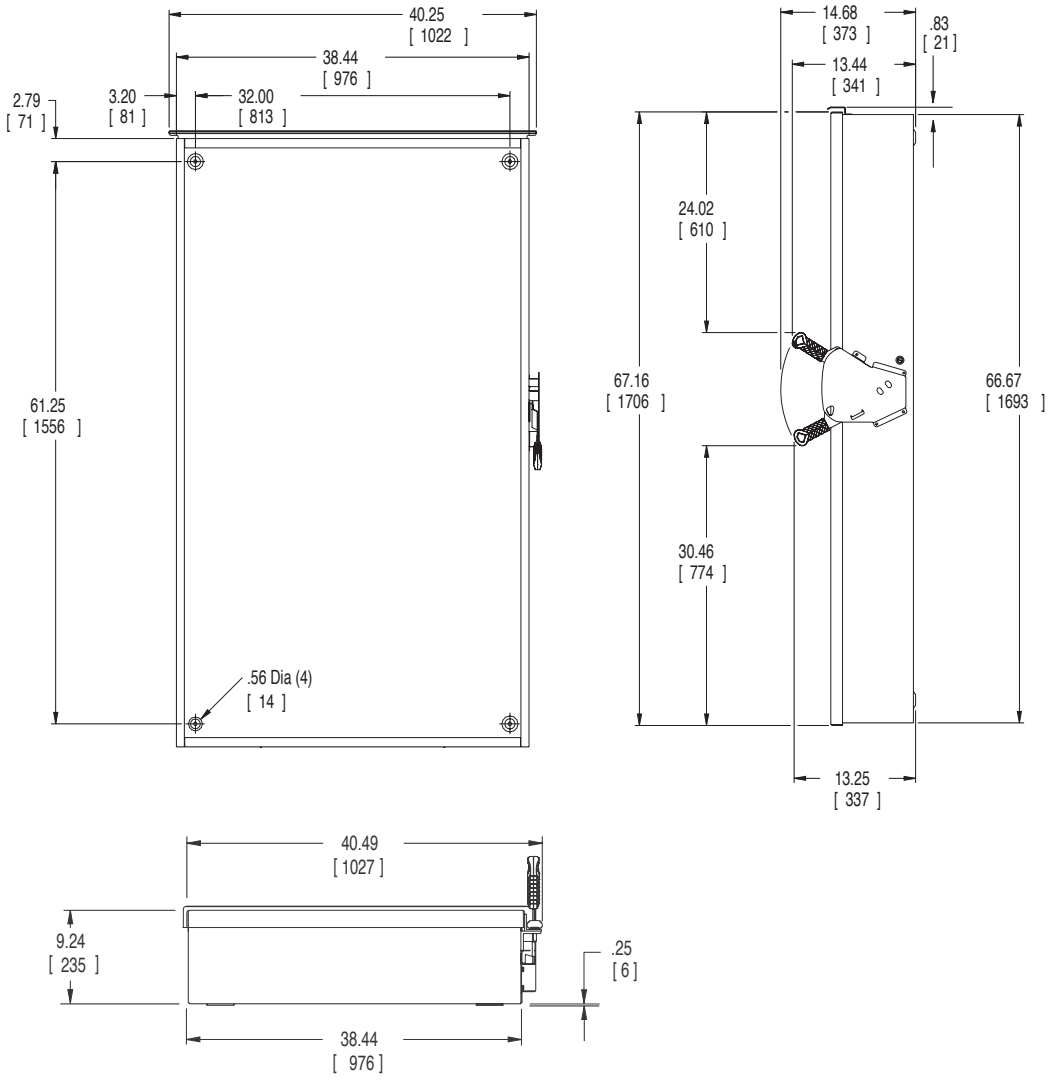

No knockouts in enclosure.
Dimensions show in inches and millimeters( ).
Dimension shown accurate to ±1/8 inch.

	LINE SIDE WIRE BEND	LOAD SIDE WIRE BEND
240V fused	22 (559)	22 (559)
600V fused	22 (559)	22 (559)

Enclosure: Galvanized Steel
Box .093 Thick (12 Gauge)
Cover .123 Thick (10 Gauge)
Finish: ANSI #61 Grey Paint

Legal Manufacturer

Siemens Industry, Inc.
3617 Parkway Ln
Peachtree Corners, GA 30092
United States of America

Telephone: +1 (800) 333-7421
www.usa.siemens.com/switches

Order No. SSDS-HF37R-1123
© 11.2023, Siemens Industry, Inc.

This document contains a general description of available technical options only, and its effectiveness will be subject to specific variables including field conditions and project parameters. Siemens does not make representations, warranties, or assurances as to the accuracy or completeness of the content contained herein. Siemens reserves the right to modify the technology and product specifications in its sole discretion without advance notice.