SIEMENS

Data Sheet

VBII Heavy Duty Safety Switch

800A & 1200A, 240V–600V, Type 12[1]

usa.siemens.com/switches

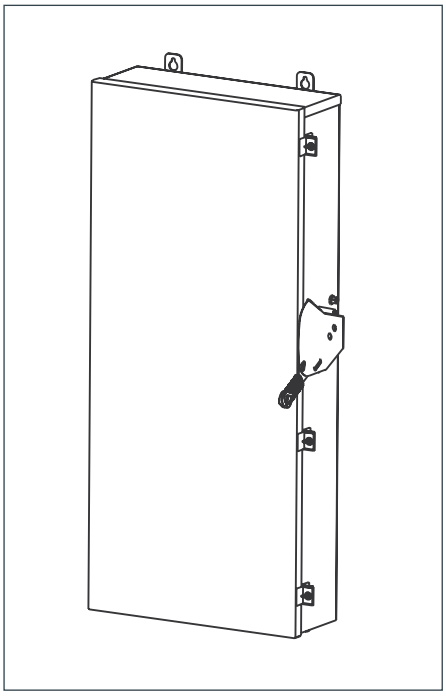

Standards and Ratings

- UL Listed under file #E4776
- Meets UL98 for switches and UL 50 for enclosures
- Meets NEMA Standard KS-1 for enclosed switches
- Meets NEC wire bending space requirements
- Rated 200,000 AIC with Class L or T fuses
- Suitable for use as service entrance equipment

Features

- Quick-make and break switching action
- Visible blade design
- Highly visible ON/OFF indication
- Modular design allows quick and easy replacement of parts
- Defeatable dual cover interlock
- Viewing windows for "Off" visual confirmation with door closed

1 Also rated 3R/3S for outdoor use.

Product Specifications

Heavy Duty 800 & 1200, 240 - 600V Type 12

General Information

Catalog Number	Amps	Volts	Description	Shipping Weight (lbs.)
HF327J [1]	800	240	3 Pole, 3 Wire Fusible	365
HF367J	800	600	3 Pole, 3 Wire Fusible	365
HF368J	1200	600	3 Pole, 3 Wire, Fusible	388
HF367JW [2]	800	600	3 Pole, 3 Wire, Fusible, Viewing Window	365
HF368JW [2]	1200	600	3 Pole, 3 Wire, Fusible, Viewing Window	388

Horsepower Ratings [3] – 240 Volts

Catalog Number	1 Phase, 240V AC		3 Phase, 240V AC		250V DC
	Std	Max	Std	Max	
HF327J	—	—	100	250	—

Horsepower Ratings [3] – 600 Volts

Catalog Number	3 Phase, 480V AC		3 Phase, 600V AC		600V DC
	Std	Max	Std	Max	
HF367J	200	500	250	500	—
HF368J					
HF367JW					
HF368JW					

Mechanical Lug Wire Range (75°C, Cu/Al)

Description	Wire Range
Line, Load (800A)	(3) 1/0 AWG - 750 Kcmil
Line, Load (1200A)	(4) 1/0 AWG - 750 Kcmil
Neutral	(4) 1/0 AWG - 750 Kcmil
Ground	(4) #6 AWG - 250 Kcmil

Accessories

Catalog Number	Description
HA165678	One Normally Open and Closed Auxiliary Switches
HA265678	Two Normally Open and Closed Auxiliary Switches
HA365678	Low Voltage Auxiliary Switch
HG678	Equipment Ground Lug Kit (Factory installed)
HN678	Neutral Kit
TFAK72	800A, 240V Class T Fuse Mounting Kit (1 per pole)
TFAK75	800A, 600V Class T Fuse Mounting Kit (1 per pole)
4	Copper Lug Kit (1 lug per kit)
5	Compression Lug Mounting Kit (2 kits/pole required allows (4) lugs/Ø)

Replacement Parts

Catalog Number	Description
HFB67A [6 7]	800A, Fusible Line Side Replacement Base
HBB67A [6 7]	800A, Fusible Load Side Replacement Base
HM67	800A, Replacement Mechanism
HL67 [8]	800A, Replacement Lugs
HH65678	800A, Replacement Handle/Handle Guard
HFB68 [6 7]	1200A, Line Side Replacement
HBB68 [6 7]	1200A, Load Side Replacement
HM678	1200A, Replacement Mechanism
HH68	1200A, Replacement Handle/Handle Guard
9	Replacement Door

Compression Lugs (Factory Installed mounting kit HCL67T for top and HCL678 for bottom required)

Wire Size	Burndy		Thomas-Betts		Ilsco	
	CU Only	CU/AL	CU Only	CU/AL	CU Only	CU/AL
2/0	YA26-N	YA26-A1	54160 54951BE	—	—	IACL-2/0 ACN-2/0
3/0	YA27-L Box YA27	YA27A3	54165-TB 54965BE	—	CRB-3/0 CRB-3/0L	IACL-3/0 ACL-3/0
4/0	YA28-L Box YA28	YA28A3	54170 54970BE	60150	CRB-4/0 CRB-4/0L	IACL-4/0 ACN-4/0
250 Kcmil	YA29-L Box YA29	YA29A1	54113 54913BE	61156 60156	CRA-250 CRA-250L	ACL-250 ACL-250
300 Kcmil	YA30-L YA30	YA30A1	54114 54914BE	61162 60162	CRA-300 CRA-300L	IACL-300 ACL-300
350 Kcmil	YA31-L YA31	YA31A1	54915BE	61165 60165	CRA-350 CRA-350L	IACL-350 ACL-350
400 Kcmil	YA31-N	—	54116 54916BE	—	—	—
500 Kcmil	YA34-L6 YA34-N	—	—	61171	—	IACL-500

1 These switches are UL Listed for application on grounded B phase systems.
2 "W" in catalog number suffix indicates switch with Viewing windows
3 Dual horsepower ratings: Std - applies when non-time delay fuses are installed.
Max - applies when time-delay fuses are installed.
4 Catalog number HLC65678 factory installed only.
5 Catalog number HCL65678 factory installed only.
6 Each Line and Load Replacement Base contains one pole.
7 Lugs are provided on Line and Load Replacement Base Assemblies.
8 One lug required per pole for either line or load.
9 Place "DOORA" at the end of the switch catalog number.

Dimension Drawings

Heavy Duty 800 & 1200, 240 - 600V Type 12

Dimensions Inches (mm)

Cat. No.	A	B	C	D	E
HF327J HF367J HF367JW	14.68(373)	13.44 (341)	24.02 (610)	30.46 (774)	13.25 (337)
HF368J HF368JW	17.80 (452)	16.07 (408)	21.90 (556)	29.90 (759)	16.06 (408)

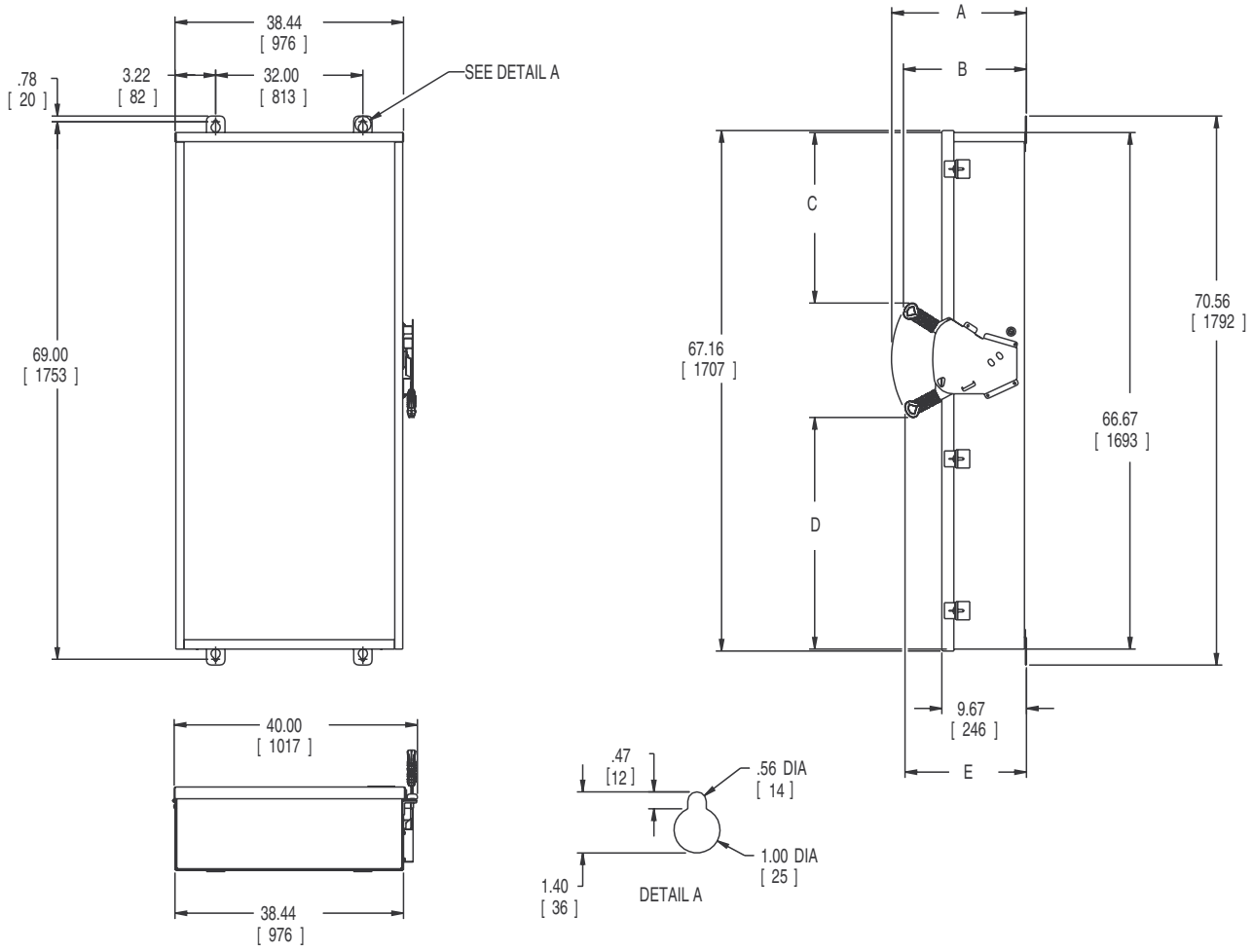

No knockouts in enclosure.
Dimensions show in inches and millimeters( ).
Dimension shown accurate to ± ⅛ inch.

	LINE SIDE WIRE BEND	LOAD SIDE WIRE BEND
240V Fused	22 (559)	22 (559)
600V Fused	22 (559)	22 (559)

Enclosure: Galvanized Steel
Box .093 Thick (12 Gauge)
Cover .123 Thick (10 Gauge)
Finish: ANSI #61 Grey Paint

Published by
Siemens Industry, Inc. 2021.

Siemens Industry, Inc.
3617 Parkway Ln
Peachtree Corners, GA 30092

For more information, please contact
our Customer Support Center.
Phone: 1-800-241-4453
E-mail: info.us@siemens.com

usa.siemens.com/switches

Order No.: SSDS-HF78J-1121
Printed in U.S.A.
© 2021 Siemens Industry, Inc.

The technical data presented in this document is based on an actual case or on as-designed parameters, and therefore should not be relied upon for any specific application and does not constitute a performance guarantee for any projects. Actual results are dependent on variable conditions. Accordingly, Siemens does not make representations, warranties, or assurances as to the accuracy, currency or completeness of the content contained herein. If requested, we will provide specific technical data or specifications with respect to any customer's particular applications. Our company is constantly involved in engineering and development. For that reason, we reserve the right to modify, at any time, the technology and product specifications contained herein.