SIEMENS

PROFIBUS-DP Communications Module CB15/CB155

Operating Instructions for
PROFIBUS-DP Communications Modules
for Siemens General Purpose Inverters

CB15

MICROMASTER
MICROMASTER Vector
MIDIMASTER Vector



CB155

COMBIMASTER
MICROMASTER Integrated



Operating Instructions

PAGE LEFT INTENTIONALLY BLANK

© Siemens plc 2000 / 2001

List of Contents

Warning and Caution Notes **5**

1 OVERVIEW **6**

1.1 Description and Features ... 6
1.2 Application on a PROFIBUS Link ... 6
1.2.1 Control and operation of the CB15/CB155 via PROFIBUS-DP ... 7

2 INSTALLATION **8**

2.1 CB15 Installation ... 9
2.1.1 Installing the Module ... 9
2.1.2 Connecting the Bus Cable ... 9
2.1.3 Bus Termination ... 10
2.1.4 CB15-Front Panel ... 10
2.2 CB155 Installation (6SE9996 –0XA18) ... 11
2.2.1 Installing the Module ... 11
2.2.2 Connecting the Bus Cable ... 12
2.2.3 Bus Termination ... 13
2.3 CB155 Installation (6SE9996 –0XA17) ... 14
2.3.1 Installing the Module ... 14
2.3.2 Connecting the Bus Cable ... 15
2.3.3 Bus Termination ... 17
2.4 EMC Measures ... 18
2.4.1 Equipotential Bonding ... 18
2.4.2 Cable Installation ... 18

3 OPERATING INFORMATION **19**

3.1 Local Control ... 19
3.2 Remote Control ... 19
3.3 System Parameters ... 19
3.3.1 Parameters not Available via the CB15/CB155 ... 19
3.3.2 Parameters Specific to the CB15/CB155 ... 19
3.3.3 Hex Display for PROFIBUS on CB15 ... 20

4 FAULT CODES **21**

5 COMMISSIONING **22**

5.1 Data Communication via PROFIBUS-DP ... 22
5.1.1 Parameter Area (PKW) ... 23
5.1.2 Rules for Task/Reply Processing ... 25
5.1.3 Process Data Area (PZD) ... 26
5.1.4 Watchdog Timeout ... 29
5.2 Settings on the PROFIBUS-DP Master ... 30
5.2.1 Setting the PPO Type from the Master ... 30
5.2.2 Setting the PPO Type on the CB15/CB155 ... 30
5.3 Initial Communication with the CB15/CB155 ... 30

6 PROFIBUS TROUBLESHOOTING **31**

6.1 Diagnostic Parameters ... 31
6.2 Diagnostics with a Class 2 Master ... 33

© Siemens plc 2000 / 2001

List of Figures

Figure 1-1: Data Structure in the PROFIBUS - DP Message Frame 7
Figure 2-1: CB15 Front Panel 10
Figure 2-2 Typical Installation Diagram for CB155 (6SE9996 –0XA18) 11
Figure 2-3: Diagram of Pin Arrangements for the 5 - way circular PROFIBUS Connector 12
Figure 2-4: Typical Installation Diagrams for CB155 – (6SE9996 –0XA17) 14
Figure 2-5: Diagram of CB155 (up to Issue K) Terminator Switch set to terminate at both ends 17
Figure 2-7: Diagram of CB155 (later than issue L) Terminator Switch. 17

List of Tables

Table 2-1 : CB15 PROFIBUS Transmission Rates and Cabling 9
Table 2-2: PROFIBUS Connector Pin Arrangements 12
Table 2-3 : CB155 PROFIBUS Transmission Rates and Cabling 12
Table 2-4 : CB155 PROFIBUS Transmission Rates and Cabling 16
Table 3-1: CB15/CB155 Parameters 20
Table 4-1: CB15/CB155 Fault Codes 21
Table 5-1: Structure of the User Data in the PROFIBUS - DP Message Frame 22
Table 5-2: Parameter Process Data Object (PPO Types) 22
Table 5-3: Structure of the Parameter Area 23
Table 5-4: Task Identifier (Master → Inverter) 23
Table 5-5: Reply Identifiers (Inverter - Master) 24
Table 5-6: Reply Error Codes (Inverter - Master) 24
Table 5-7: Parameter Identifier Example 24
Table 5-8: Parameter Value Example 25
Table 5-9: Process Data Area 26
Table 5-10: Bit Word Definition 27
Table 5-11: Status Word Definition 28
Table 5-12: Value Table for the Identification Bytes 30
Table 6-1: PROFIBUS Diagnostic Parameters 31

© Siemens plc 2000 / 2001

Warning and Caution Notes



WARNING

Hazardous voltages are present in this electrical equipment during operation.
Non-observance of the safety instructions can result in severe personal injury or death.
Only qualified personnel should work on or around this equipment after becoming thoroughly familiar with all warnings, safety notices and maintenance procedures contained herein.
The successful and safe operation of this equipment is dependent on proper handling, installation, operation and maintenance.

Definitions

-**Qualified Person**

For the purposes of this manual and product labels, a qualified person is one who is familiar with the installation, construction, operation and maintenance of this equipment and with the hazards involved. In addition, the person must be:

(1) Trained and authorised to energise, de-energise, clear, ground and tag circuits and equipment in accordance with established safety practices.
(2) Trained in the proper care and use of protective equipment in accordance with established safety practices.
(3) Trained in rendering first aid.

-**DANGER**

For the purposes of this manual and product labels, **DANGER** indicates that loss of life, severe personal injury or substantial property damage WILL result if proper precautions are not taken.

-**WARNING**

For the purposes of this manual and product labels, **WARNING** indicates that loss of life, severe personal injury or substantial property damage CAN result if proper precautions are not taken.

-**CAUTION**

For the purposes of this manual and product labels, **CAUTION** indicates that minor personal injury or property damage CAN result if proper precautions are not taken.

-**Note**

For the purposes of this manual, and product labels, **Notes** merely call attention to information that is especially significant in understanding and operating the drive.

© Siemens plc 2000 / 2001

1 OVERVIEW

1.1 Description and Features

The PROFIBUS Module (CB15/CB155) is a device that allows control of an inverter over a PROFIBUS-DP (SINEC L2-DP) serial bus.

The CB15 is for use with MICROMASTER, MICROMASTER VECTOR and MIDIMASTER Vector inverters.

The CB155 is for use with COMBIMASTER and MICROMASTER Integrated inverters.

Features

- Retains the ability to access the internal parameter set of the inverter (CB15 only).
- Allows high-speed cyclical communication over a PROFIBUS link.
- Ability to control up to 125 inverters using the PROFIBUS-DP protocol.
- Provides open communication conforming to all relevant aspects of DIN19245 Part 3. It may be used with any other PROFIBUS-DP peripheral on the serial bus.
- Easy to install.
- Easy to configure with proprietary Siemens software (parameterisation disc included).
- Output frequency (and hence motor speed) can be controlled by one of five methods:

    (1) Digital frequency setpoint.
    (2) Analogue setpoint (voltage or current input).
    (3) Motor potentiometer.
    (4) Fixed frequency.
    (5) Remote data transmission via the PROFIBUS link.



IMPORTANT

The RS485 serial link is not available while the CB15/CB155 is connected to the inverter.

1.2 Application on a PROFIBUS Link

PROFIBUS-DP is defined in standard in EN 50170. Data communication with the CB15/CB155 conforms to the specifications in the VDI/VDE 3689 ' PROFIBUS Profile for Variable Speed Drives' guideline. This defines the user data structure through which a master can access the drive slaves. The user data structure is subdivided into two areas that can be transmitted in each message frame:

Process data, i.e. control words and setpoints, or status information and actual values and
A parameter area for reading/writing parameter values, e.g. for reading out faults or information on the attributes of a parameter, such as minimum/maximum limits, etc.

The structure of the user data is designated as Parameter Process data Objects (PPO) in the PROFIBUS variable speed drives profile (VDI/VDE guideline 3689). There are five PPO types: user data with no parameter area with two words or six words of process data, or user data with a parameter area and two, six or ten words of process data.

The CB15/CB155 only supports PPO types 1 and 3.

© Siemens plc 2000 / 2001

During installation of the network you can configure on the master which PPO type is used to address the inverter from the PROFIBUS-DP master. The choice of PPO type depends on the task of the drive within the automation network. The process data is always transmitted. It is processed with the highest priority in the shortest time slices. The process data is used for open-loop control of the drive in the automation network, e.g. switching on/off, specifying setpoints, etc.

The parameter area provides the user with free access on the network to all the parameters located on the inverter, e.g. for reading out detailed diagnostics information, fault messages, etc. This enables further information to be called up on a higher-level system, such as a PC, for visualisation of the drive, without affecting the performance capabilities of process data communication.

1.2.1 Control and operation of the CB15/CB155 via PROFIBUS-DP

All information required for the open-loop control of a variable speed drive in the network environment of an industrial process is transmitted in the process data area (see Figure 1). Control information (control words) and setpoints are transmitted from the PROFIBUS-DP master to the inverter. Information on the status of the inverter (status words) and actual values is transmitted in the opposite direction.

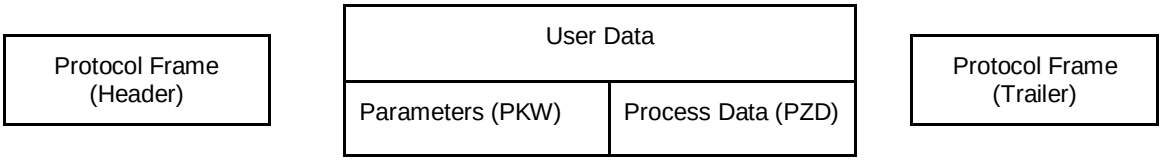

Figure 1-1: Data Structure in the PROFIBUS - DP Message Frame

The communication component of the interface board stores the received process data in the order in which it was transmitted in the message frame. Each word in the frame is assigned a fixed function.

The CB15/CB155 supports the PROFIBUS-DP control commands FREEZE and SYNC.

A diagnostics parameter can be used to read detailed diagnostics information straight from the diagnostics memory of the CB15/CB155.

© Siemens plc 2000 / 2001

2 INSTALLATION

SECTION 2.1

2.1 CB15 Installation 9

2.1.1 Installing the Module 9
2.1.2 Connecting the Bus Cable 9
2.1.2.1 CB15 Terminals 9
2.1.2.2 Bus Cabling 9
2.1.2.3 EMC Shielding 9
2.1.3 Bus Termination 10
2.1.4 CB15-Front Panel 10

2.2 CB155 Installation (6SE9996 –0XA18) 11

2.2.1 Installing the Module 11
2.2.2 Connecting the Bus Cable 12
2.2.2.1 CB155 Terminals (6SE9996-0XA18) 12
2.2.2.2 Bus Cabling 12
2.2.2.3 EMC Shielding 13
2.2.3 Bus Termination 13

2.3 CB155 Installation (6SE9996 –0XA17) 14

2.3.1 Installing the Module 14
2.3.2 Connecting the Bus Cable 15
2.3.2.1 CB155 Terminals (for Issue H and later Models – 6SE9996-0XA17) 15
2.3.2.2 Issue Status: Up to and including issue I 15
2.3.2.3 Issue Status: K 15
2.3.2.4 Issue Status: L ..... **Error! Bookmark not defined.**
2.3.2.5 Bus Cabling 16
2.3.2.6 EMC Shielding 16
2.3.3 Bus Termination 17

2.4 EMC Measures 18

2.4.1 Equipotential Bonding 18
2.4.2 Cable Installation 18



WARNING

Incorrect operation of the serial bus system can lead to an inverter being switched on inadvertently. Commissioning work must only be carried out by personnel who are qualified in installing such systems. Additionally, the guidelines associated with the installation of the inverter itself must be followed (see section 2 of the inverter's handbook).

© Siemens plc 2000 / 2001

2.1 CB15 Installation

The inverter must be switched off before the CB15 is either connected or disconnected. The CB15 is powered directly from the inverter and therefore needs no additional external supply

2.1.1 Installing the Module

Fix the CB15 to the front of the inverter by mating the D-type connectors together and then securing in position by pressing the module onto the inverter.

2.1.2 Connecting the Bus Cable

2.1.2.1 CB15 Terminals

The PROFIBUS connection must be made using the D-type socket on the front of the CB15. Connections to this socket are as follows:

Pin **3** PROFIBUS **B** connection (Red)
Pin **8** PROFIBUS **A** connection (Green)

Additionally, the cable shield must be connected to the shell of the D-type connector, which is connected to protective earth via the CB15 and inverter. The connector must be screwed securely to the CB15 to ensure both mechanical strength and earth continuity.

Connectors from the 6ES7972 range are recommended with Profibus cable 6XV 1830-0EH10

Note
As the stations must be ‘ daisy-chained’ together (except for the stations at either end of the bus), there must be two cables into the D-type connector - one from the previous station and one to the next station.

This bus topology means that a station may be disconnected from the bus or powered down while still connected without affecting bus operation.

2.1.2.2 Bus Cabling

Transmission Rate (Kbits/s)	Max. Length of Cable in a Segment (m)
9,6	1200
19,2	1200
93,75	1200
187,5	1000
500	400
1500	200
12000	100

Table 2-1 : CB15 PROFIBUS Transmission Rates and Cabling

A segment can be expanded using RS485 repeaters. The SINEC L2 RS485 repeater (order no. 6GK1510-0AC00) is recommended.

2.1.2.3 EMC Shielding

The conductors of the bus cables must be shielded and installed separately from the power cables with a minimum clearance of 20 cm. The shield for the bus cable should be connected to protective earth at both ends. This is achieved as follows:

For the CB15 use the P-clip provided with the module as shown in the enclosed instruction sheet.

Bus and power cables should be installed at a crossing angle of 90º.

© Siemens plc 2000 / 2001

2.1.3 Bus Termination

For interference-free operation of PROFIBUS-DP, the bus cable must be terminated at both ends with bus terminating resistors. The bus cable from the first PROFIBUS-DP station to the last PROFIBUS-DP station should be treated as a single bus cable, so that the PROFIBUS-DP should be terminated twice.

For the CB15 this is achieved by moving the selector switch mounted on the D-type housing of the PROFIBUS-DP connector to the ON position.

2.1.4 CB15-Front Panel

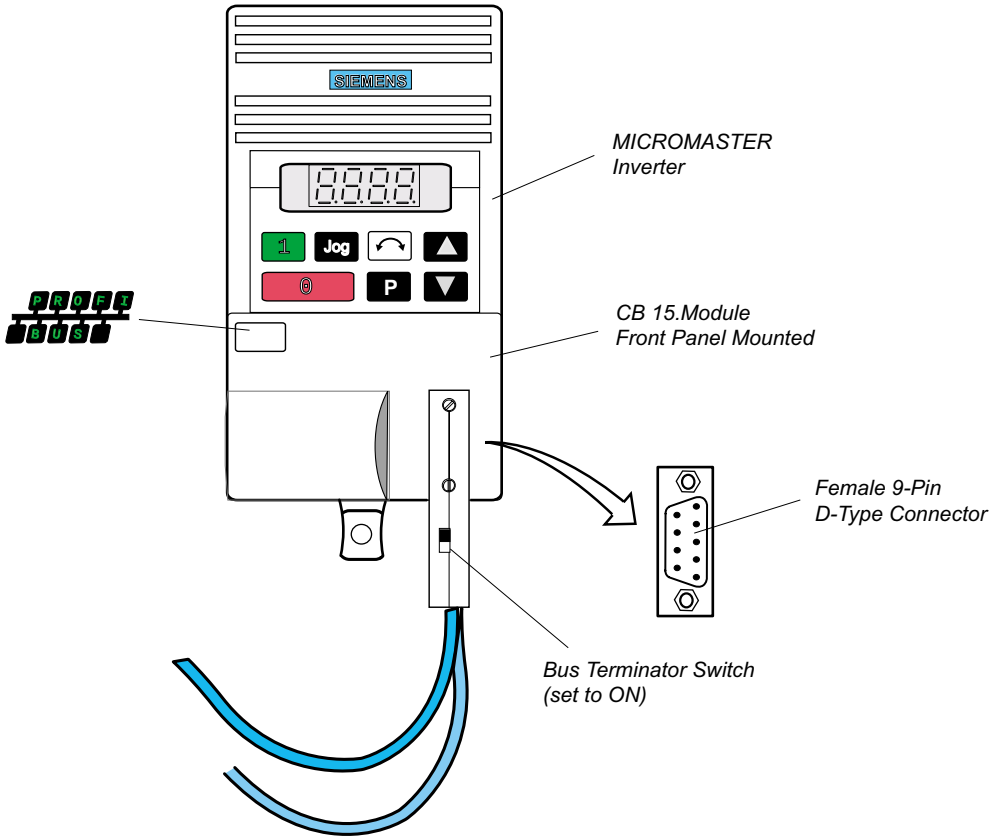

Figure 2-1: CB15 Front Panel

© Siemens plc 2000 / 2001

2.2 CB155 Installation (6SE9996 –0XA18)

The inverter must be switched off before the CB155 is either connected or disconnected. The CB155 is powered directly from the inverter and therefore needs no additional external supply

2.2.1 Installing the Module

Before connecting the CB155 to the inverter, it is necessary to set the following parameters to the correct values, using the OPM2 (Optional Clear Text display).

- P009 ➜ 3 Extended Parameter Set.
- P099 ➜ 1 Communications Adapter Type = PROFIBUS
- P918 ➜ [ ] Slave Address – [ ] (i.e., PROFIBUS address)

Fix the CB155 to the side of the inverter housing using the screws provided. Connect the CB155 to SK200 on the inverter, using the supplied cable.

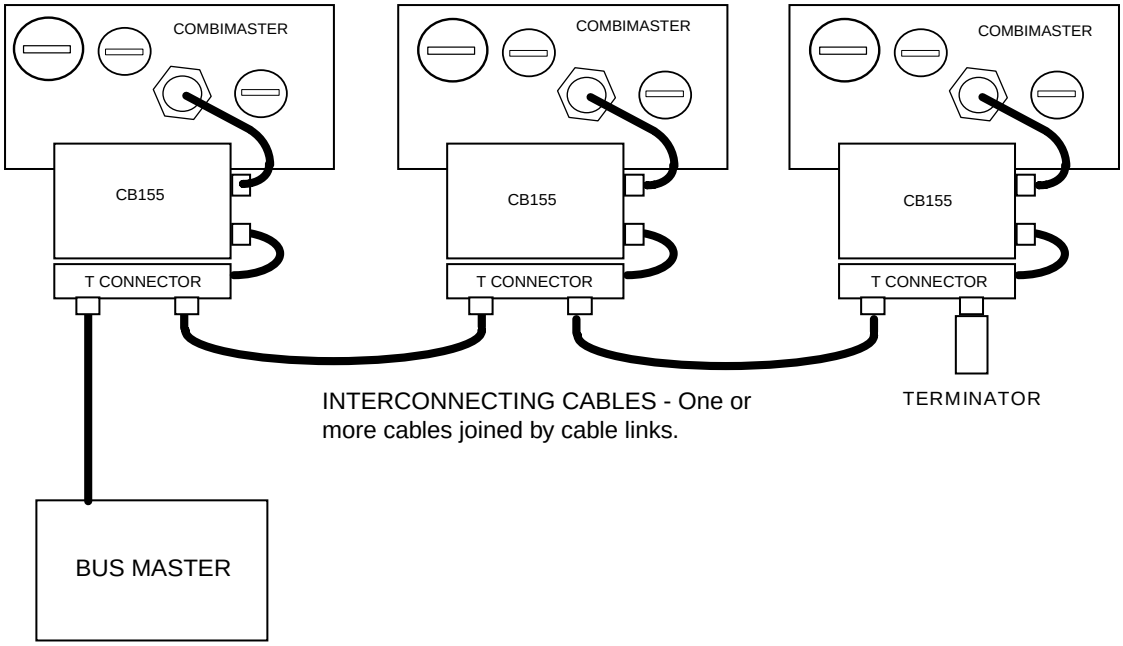

Installation Accessories

PROFIBUS T- Connector	6SE9996-0XA21
PROFIBUS Terminator	6SE9996-0XA22
PROFIBUS Cable 1 metre	6SE9996-0XA23
PROFIBUS Cable 5 metre	6SE9996-0XA24
PROFIBUS Cable 10 metre	6SE9996-0XA25
PROFIBUS Cable link	6SE9996-0XA26

Diagram shows typical PROFIBUS installations using CB155 and COMBIMASTER

Figure 2-2 Typical Installation Diagram for CB155 (6SE9996 –0XA18)

When interfacing with a PLC or other slave using a Profibus D type connector, a cable 6SE9996-OXA23 has to be cut and the cores connected as follows:

Green to Profibus A connection.
Red to Profibus B connection.

© Siemens plc 2000 / 2001

2.2.2 Connecting the Bus Cable

2.2.2.1 CB155 Terminals (6SE9996-0XA18)

The PROFIBUS connection will normally be made using the optional T connector 6SE9996-0XA21). This is connected to the free connector on the side of the CB155, and is in turn screwed to the front of the CB155, thus providing the PROFIBUS IN and OUT connections. See Diagram on Page 11.

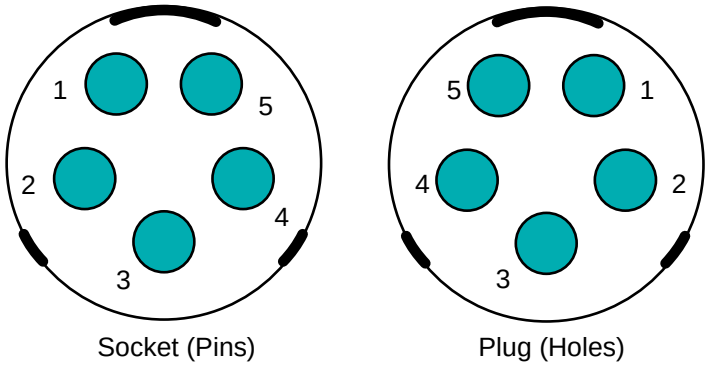

Figure 2-3: Diagram of Pin Arrangements for the 5 - way circular PROFIBUS Connector

Note that the socket is used on the PROFIBUS module, and the gender adapters. The plug is used on the interconnecting cables.

Terminal	Function and/or information
1	+5V
2	PROFIBUS A (Green)
3	0V
4	PROFIBUS B (Red)
5	No connection

Table 2-2: PROFIBUS Connector Pin Arrangements

2.2.2.2 Bus Cabling

Transmission Rate (Kbits/s)	Max. Length of Cable in a Segment (m)
9,6	1200
19,2	1200
93,75	1200
187,5	1000
500	400
1500	200
12000	100

Table 2-3 : CB155 PROFIBUS Transmission Rates and Cabling

A segment can be expanded using RS485 repeaters. The PROFIBUS RS485 repeater (order no. 6GK1510-0AC00) is recommended.

© Siemens plc 2000 / 2001

2.2.2.3 EMC Shielding

The conductors of the bus cables must be shielded and installed separately from the power cables with a minimum clearance of 20 cm. The shield for the bus cable should be connected to protective earth at both ends.

For the CB155 (6SE9996 –0XA18) if the specified cables are used no further action is necessary.

Bus and power cables should be installed at an angle of 90º.

2.2.3 Bus Termination

For interference-free operation of PROFIBUS-DP, the bus cable must be terminated at both ends with bus terminating resistors. The bus cable from the first PROFIBUS-DP station to the last PROFIBUS-DP station should be treated as a single bus cable, so that the PROFIBUS-DP should be terminated twice.

For the CB155 (6SE9996 –0XA18) this is achieved by fitting the dedicated terminating connector to the free position on the T connector at the end of the link.

Note

(1) Ensure that you only connect/activate the bus terminator to the first network station and the last network station.

© Siemens plc 2000 / 2001

2.3 CB155 Installation (6SE9996 –0XA17)

The inverter must be switched off before the CB155 is either connected or disconnected. The CB155 is powered directly from the inverter and therefore needs no additional external supply

2.3.1 Installing the Module

Before connecting the CB155 to the inverter, it is necessary to set the following parameters to the correct values, using the OPM2 (Optional Clear Text display).

- P009 ➜ 3 Extended Parameter Set.
- P099 ➜ 1 Communications Adapter Type = PROFIBUS
- P918 ➜ [ ] Slave Address – [ ] (i.e., PROFIBUS address)

Fix the CB155 to the side of the inverter housing using the screws provided. Connect the CB155 to SK200 on the inverter, using the supplied cable. Installation should be as shown in the diagrams below

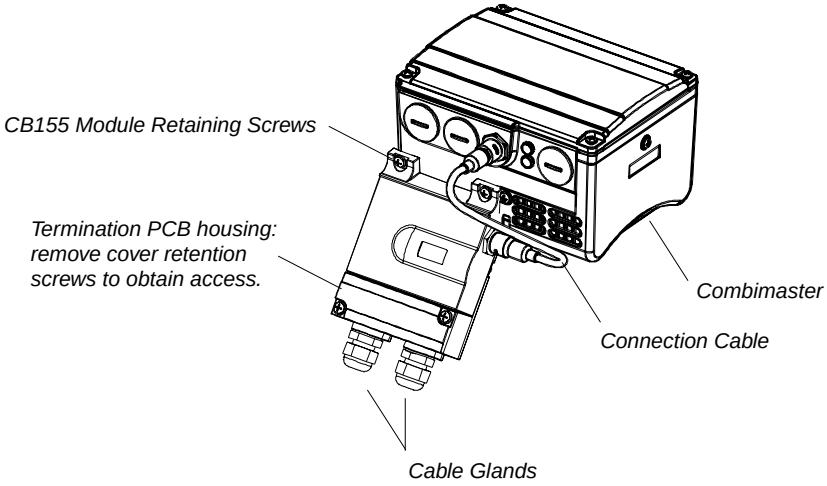

Case Size A (CSA)

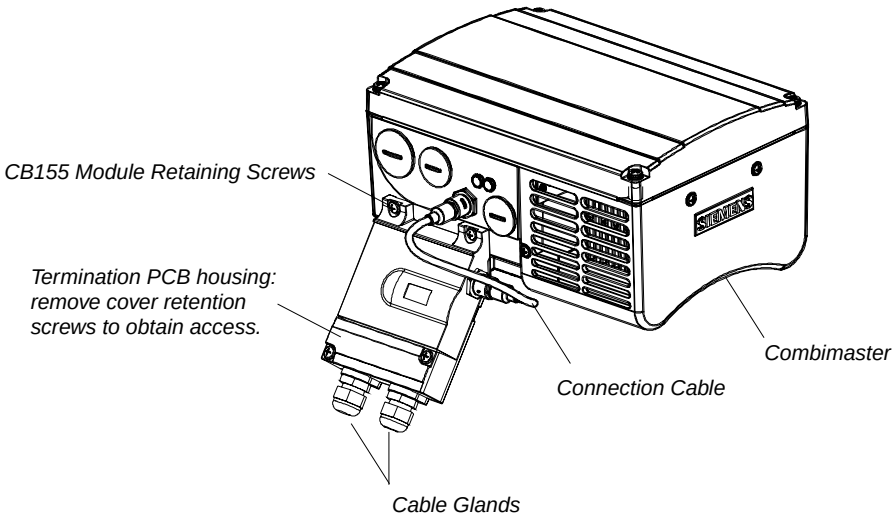

Case Size B (CSB)

Diagram shows typical PROFIBUS installations using CB155 and COMBIMASTER

Figure 2-4: Typical Installation Diagrams for CB155 – (6SE9996 –0XA17)

© Siemens plc 2000 / 2001

2.3.2 Connecting the Bus Cable

2.3.2.1 CB155 Terminals (for Issue H and later Models – 6SE9996-0XA17)

The PROFIBUS connection are made using the terminals on the termination PCB. This is located directly beneath the removable access cover. It will be necessary to remove the two retaining screw to gain access.

WARNING

PLEASE CHECK ISSUE STATUS OF PRODUCT AND REFER TO FOLLOWING TABLE

CB155	Issue Status	Wiring Guidelines
	Up to and including issue I	See Photo 2.3.2.2 below Note: PCB labelling incorrect
	Issue K	See Photo 2.3.2.3 below Note: See correction label

2.3.2.2 Issue Status: Up to and including issue I



Connect Profibus cores as shown
Note: Terminal marking is incorrect

2.3.2.3 Issue Status: K



Refer to terminal label (A / B), Connect Profibus cores accordingly.

© Siemens plc 2000 / 2001

2.3.2.4 Bus Cabling

Transmission Rate (Kbits/s)	Max. Length of Cable in a Segment (m)
9,6	1200
19,2	1200
93,75	1200
187,5	1000
500	400
1500	200
12000	100

Table 2-4 : CB155 PROFIBUS Transmission Rates and Cabling

A segment can be expanded using RS485 repeaters. The SINEC L2 RS485 repeater (order no. 6GK1510-0AC00) is recommended.

2.3.2.5 EMC Shielding

The conductors of the bus cables must be shielded and installed separately from the power cables with a minimum clearance of 20 cm. The shield for the bus cable should be connected to protective earth at both ends.

For the CB155 (6SE9996 –0XA17) the cable gland connects the bus shield to the protective earth.

Bus and power cables should be installed at an angle of 90º.

© Siemens plc 2000 / 2001

2.3.3 Bus Termination

For interference-free operation of PROFIBUS-DP, the bus cable must be terminated at both ends with bus terminating resistors. The bus cable from the first PROFIBUS-DP station to the last PROFIBUS-DP station should be treated as a single bus cable, so that the PROFIBUS-DP should be terminated twice.

For the CB155 (up to Issue K) this is achieved by setting the Terminator switch to the 'IN' position marked on the PCB as shown below.

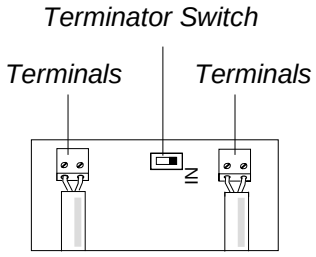

Figure 2-5: Diagram of CB155 (up to Issue K) Terminator Switch set to terminate at both ends.

For the CB155, (later than issue L), this is achieved by switching the Terminator switch to the 'ON' position marked on the PCB as shown below.

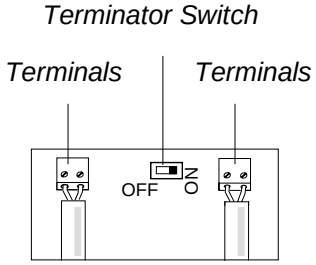

Figure 2-7: Diagram of CB155 (later than issue L) Terminator Switch.

Note

(1) Ensure that you only connect/activate the bus terminator to the first network station and the last network station.

© Siemens plc 2000 / 2001

2.4 EMC Measures

The following measures are required for interference-free operation of the PROFIBUS-DP. Additional information on EMC precautions can be found in the 'ET 200 Distributed I/O System' manual.

2.4.1 Equipotential Bonding

If the cable shields are earthed at different sections of the system then equipotential bonding cables can be used to reduce current flow in the screen between the inverters and the PROFIBUS-DP master.

The following equipotential cables are recommended:

16 mm^2 Cu for equipotential bonding conductors up to 200m in length.
25 mm^2 Cu for equipotential bonding conductors over 200m in length.

Use a large contact surface connection between the equipotential bonding conductors and the protective ground conductor.

2.4.2 Cable Installation

Observe the following rules when installing cables:

-Bus cables (signal cables) may not be installed directly adjacent to power cables.

-Signal cables (and equipotential bonding cables) should be connected across the shortest possible path.

-Power cables and signal cables must be installed in separate cable runs.

-Shields should have low impedance connections (large surface area).

© Siemens plc 2000 / 2001

3 OPERATING INFORMATION

3.1 Local Control

The inverter will operate a motor in an identical manner to that described in the operating instructions for the inverter.

3.2 Remote Control

Different modes of remote control are available via the serial link (*refer to parameters P927 and P928 in section 3.3.2 below for details*).

3.3 System Parameters

The basic parameter set used by the CB15/CB155 is identical to that used for the inverter. However, some parameters cannot be accessed because either they are not required or they have been replaced by PROFIBUS parameters.

3.3.1 Parameters not Available via the CB15/CB155

P091	Slave address (replaced by P918)
P092	Baud rate (replaced by P963)
P093	USS Timeout
P121 - P124	Enable/Disable control keys
P910	Local/Remote mode (replaced by P927 and P928)
P922	Software version (replaced by P702)
P923	Equipment system number (replaced by P701)
P930	Fault log (replaced by P947: the last 4 Fault Codes are also in P140-143
P931	Last Warning (replaced by P958)

3.3.2 Parameters Specific to the CB15/CB155

Note

• = Parameters marked thus can be changed while the drive is running.

Parameter	Function	Range [Default]	Description / Notes
P700	Software version, PROFIBUS module	00.00 - 99.99 [-]	Contains the software version number of the PROFIBUS module and cannot be changed.
P701 •	Equipment system number	0 - 255 [0]	You can use this parameter to allocate a unique reference number to the inverter. It has no operational effect.
P702	Software version	00.00 - 99.99 [-]	Contains the software version number of the inverter and cannot be changed
P880	Indexed parameter diagnostic data	-	This parameter contains data relating to the PROFIBUS-DP function *(see section 6.1)*.
P918 •	PROFIBUS-DP slave address	1 - 126 [126]	Sets the bus address (range 1 to 126) for the RS485 serial interface with PROFIBUS-DP protocol.
P927 •	PROFIBUS-DP local/remote parameter control	0 - 1 [0]	Sets local or remote **parameter** control via the RS485 interface: **0** = Local parameter control **1** = Remote parameter control

© Siemens plc 2000 / 2001

P928 •	PROFIBUS-DP local/remote state control	0 - 3 [0]	Sets local or remote **state** control via the RS485 interface: **0** = Full local control **1** = Full remote control **2** = Partial local control (remote control of frequency) **3** = Partial remote control (local control of frequency) **Note:** If P928 is set to 1 or 2, the analogue input is active when P006 is set to 1.
P947	Indexed parameter fault log	-	Index = **n000** Contains latest unacknowledged fault or error code. Index = **n001** to **n007** Fixed at 0000. Index = **n008** Contains latest acknowledged fault or error code. Index = **n009** to **n015** Fixed at 0000.
P958	Last Warning code	0 - 9999 [-]	The last warning that occurred is shown in this parameter until power is removed: Refer to Parameter P931 description in Inverter Operating instructions. .
P963	PROFIBUS-DP baud rate	0 - 10 [-]	Shows the bit rate of the PROFIBUS-DP serial bus set automatically in PROFIBUS mode (read only): **0** = Baud rate not found **1** = Baud rate = 9600 Baud **2** = Baud rate = 19,2 KBaud **3** = Baud rate = 45,45 KBaud **4** = Baud rate = 93,75 KBaud **5** = Baud rate = 187,5 KBaud **6** = Baud rate = 500 KBaud **7** = Baud rate = 1,5 MBaud **8** = Baud rate = 3,0 MBaud **9** = Baud rate = 6,0 MBaud **10** = Baud rate = 12,0 Mbaud
P967	Control word	*see section 3.3.3*	Shows the latest received control word in hex format *(see section 3.3.3*).
P968	Status word	*see section 3.3.3*	Shows the latest status control word in hex format *(see section 3.3.3*).
P970	Reset to factory default settings	0 - 1 [1]	Set to '0' and then press **P** to reset all parameters except P101 to the factory default settings.

Table 3-1: CB15/CB155 Parameters

3.3.3 Hex Display for PROFIBUS on CB15

Several PROFIBUS-DP parameters are displayed in hex format using the four digit 7-segment display on the inverter.

Parameter P967 - Control word
Parameter P968 - Status word

© Siemens plc 2000 / 2001

4 FAULT CODES

Fault codes are displayed and acknowledged for the CB15/CB155 in the same way as on the inverter. Several new error codes specific to PROFIBUS have been added and are described below. Further help may be found in section 5 (PROFIBUS Commissioning) and section 6 (PROFIBUS Troubleshooting).

Fault Code	Cause	Corrective Action
F030 *	Interruption to received PROFIBUS-telegrams	Check that the bus connections are not inverted or shorted. Check that the bus connections between master and slave are continuous. Check that the baud rate is between 9.6 KBd and 12 MBd. Check that the slave address is correct and unique. Check that the required inverter has been included in the configuration information for the master. (If using IM308B/C, Check that the inverter has been included in the slave list.) Check that the master is sending telegrams of the correct type (PPO1 or PPO3). Check that the master is running correctly (IM308B/C is in RUN mode). Check that the slave type is correct. (If using IM308B/C, use the configuration file on the supplied floppy disc to set the correct slave type for the CB15/CB155 when configuring with COM ET 200).
F031	Link to inverter failed	Check the integrity of CB15/CB155 mounting to inverter.
F033 *	PROFIBUS telegram error	Reconfigure the master to send telegrams of the correct type (i.e. PPO type 1 or PPO type 3 - see section 6).
F036	Program fault	Switch off power and then switch on again.

Table 4-1: CB15/CB155 Fault Codes

- *These faults relate to communication problems and will only cause the inverter to trip if it is under remote control (P928 = 1 or 3).*

© Siemens plc 2000 / 2001

5 COMMISSIONING

5.1 Data Communication via PROFIBUS-DP

The structure of the user data is designated as parameter process data objects (PPO) in the PROFIBUS variable speed drives profile:

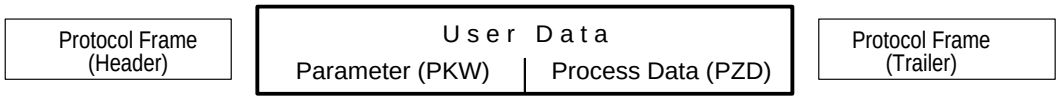

Table 5-1: Structure of the User Data in the PROFIBUS - DP Message Frame

There is user data with a parameter area (PKW) and a process data area (PZD) and user data that consists exclusively of process data. The PROFIBUS variable speed drives profile defines five PPO types. The PPO type is defined in the PROFIBUS-DP master parameter settings.

	PKW				PZD									
	PKE	IND	PWE		PZD1 STW1 ZSW1	PZD2 HSW HIW	PZD 3	PZD 4	PZD 5	PZD 6	PZD 7	PZD 8	PZD 9	PZD1 0
	1st Word	2nd Word	3rd Word	4th Word	1st Word	2nd Word	3rd Word	4th Word	5th Word	6th Word	7th Word	8th Word	9th Word	10th Word
PPO1														
PPO2														
PPO3														
PPO4														
PPO5														

PKW: Parameter identifier value
PZD: Process data
PKE: Parameter identifier
IND: Index
PWE: Parameter value
STW1: Control word 1
ZSW1: Status word 1
HSW: Main setpoint
HIW: Main actual value

Table 5-2: Parameter Process Data Object (PPO Types)

Note
The CB15/CB155 only supports PPO types 1 and 3.

© Siemens plc 2000 / 2001

5.1.1 Parameter Area (PKW)

The parameter area can be used to control and monitor parameters (read/write) with PPO type 1 only.

	Parameter Identifier			(PKE)	1st word
Bit No.:	15 12	11	10	0	
	AK	SPM	PNU		
	Parameter Index			(IND)	2nd word
Bit No.:	15 8	7		0	
	Index	Value = 0			
	Parameter Value			(PWE)	
	Parameter Value High			(PWE1)	3rd word
	Parameter Value Low			(PWE2)	4th word

AK: Task or reply identifier
SPM: Toggle bit for spontaneous message processing
PNU: Parameter number

Table 5-3: Structure of the Parameter Area

Parameter Identifier (PKE) (1st Word)

The parameter identifier (PKE) is always a 16-bit value.
Bits 0 to 10 contain the number of the desired parameter (PNU). Refer to the listing in the Operating Instructions for the inverter.

Bit 11 is the toggle bit for spontaneous messages. The CB15/CB155 does not support this function!

Bits 12 to 15 contain the task or reply identifier (AK).

Only certain reply identifiers are possible depending on the task identifier. If the reply identifier has a value of 7 (task not executable), an error number is stored in parameter value 2 (PWE2).

Task Identifier	Meaning	Answer Identifier	
		Positive	Negative
0	No task	0	7 or 8
1	Request parameter value	1	7 or 8
2	Change parameter value (word)	2	7 or 8
4	Request description element	3	7 or 8
6	Request parameter value (array word)	4	7 or 8
9	Request number of array elements	6	7 or 8
otherwise		-	7 or 8

Table 5-4: Task Identifier (Master → Inverter)

© Siemens plc 2000 / 2001

Reply Identifier	Meaning
0	No reply
1	Transmit parameter value (word)
3	Transmit description element
4	Transmit parameter value (array word)
6	Transmit number of array elements
7	Task not executable (with error number)
8	No exclusive use of PKW interface

Table 5-5: Reply Identifiers (Inverter - Master)

Error Number	Meaning
0	No reply
1	Parameter value cannot be changed
2	Lower or upper value limit exceeded
3	Error in sub-index
4	Not an array
5	Incorrect data type
7	Description element cannot be changed
9	Description data does not exist

Table 5-6: Reply Error Codes (Inverter - Master)

Example:	Fixed setpoint 1: P41 = 29 (HEX) Change parameter value.																
	Parameter Identifier (PKE)																1st word
Bit No.:	15			12	11	10										0	
	AK				SPM	PNU											
	0	0	1	0	0	0	0	0	0	0	1	0	1	0	0	1	Binary value
	2				0				2				9				HEX value
Bit 12 .. 15:	Value = 2 (= ‘2’ Hex); change parameter value (word)																
Bit 0 .. 11:	Value = 41 (= ‘29’ Hex); parameter number without enabled spontaneous message bit																

Table 5-7: Parameter Identifier Example

Parameter Index (IND) (2nd Word)

The index (also referred to as a subindex in the PROFIBUS profile) is an 8-bit value and is always transmitted on PROFIBUS-DP in the most significant byte (bits 8 to 15) of the parameter index (IND); the least significant byte (bits 0 to 7) of the parameter index (IND) has the value 0.

The index is not used for the inverter’s basic parameter set.

© Siemens plc 2000 / 2001

Parameter Value (PWE) (3rd and 4th Word)

The parameter value (PWE) is always transmitted as a double word (32 bits). Only one parameter value can be transmitted in a frame.

A 32-bit parameter value is composed of PWE1 (most significant word, 3rd word) and PWE2 (least significant word, 4th word).

A 16-bit parameter value is transmitted in PWE2 (least significant word, 4th word). In this case PWE1 (most significant word, 3rd word) must be set to value 0 on the PROFIBUS-DP master.

Example:	Fixed setpoint 1: P41 = 29 (HEX) Change parameter value to 30 (DEC) = 1E (HEX)				
	Parameter Value		(PWE)		
Bit No.:	31	24	23	16	3rd word (PWE1) (Hex)
	0	0	0	0	
Bit No.:	15	8	7	0	4th word (PWE2) (Hex)
	0	0	1	E	
Bit 0 .. 15:	Parameter value for 16-bit parameter or low part for 32-bit parameter				
Bit 16 .. 31:	Value = 0 for 16-bit parameter or high part for 32-bit parameter				

Table 5-8: Parameter Value Example

5.1.2 Rules for Task/Reply Processing

- One task or one reply can only ever refer to one parameter value.
- The master must repeat a task until it has received the appropriate reply.
- The master detects the reply to an issued task:
  Evaluation of the reply identifier.
  Evaluation of the PNU parameter number.
  Through evaluation of the IND parameter index, where appropriate.
  Through evaluation of the PWE parameter value, where appropriate.
- The task must be transmitted completely in one frame, split task frames are not permitted. The same applies to the reply.
- In the case of reply frames (actual values) which contain parameter values, the slave does not always reply with the current value when the reply frame is repeated.
- When no information is required by the PKW interface in cyclical mode (only PZD data is important), the ‘ no task’ task must be issued.

© Siemens plc 2000 / 2001

5.1.3 Process Data Area (PZD)

Control words and setpoints (Master _ Inverter) or status words and actual values (Inverter _ Master) can be transmitted with the process data. The order of the elements (words) in the process data area is always the same.

PZD1	PZD2

PZD1 = 16 Bits PZD2 = 16 Bits

	PZD1	PZD2
Task frame (Master _ Slave)	Control word **(STW)**	Main setpoint **(HSW)**
Reply frame (Slave _ Master)	(Device) status word **(ZSW)**	Main actual value **(HIW)**

Table 5-9: Process Data Area

5.1.3.1 Control Word (STW)

The control word is identical to the definition in the PROFIBUS 'variable speed drives' profile |3|.

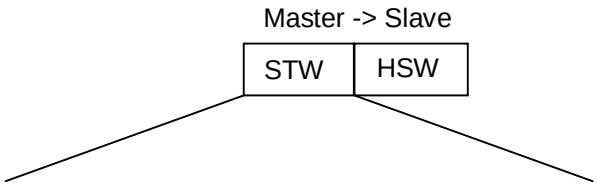

Bit No. **15 14 13 12 11 10 9 8 7 6 5 4 3 2 1 0**

Bit	Value	Meaning	Notes
0	1	ON	Switches converter to 'ready for operation' state. Direction of rotation must be defined in bit 14.
	0	OFF	Shutdown, deceleration ramp, pulse disable at f< f_{min}
1	1	Condition for operation	OFF2 command is cancelled.
	0	OFF2	Immediate pulse inhibit, drive coasts.
2	1	Condition for operation	OFF3 command is cancelled.
	0	OFF3	If programmed deceleration < 10 s (P003 < 10) at half the deceleration time, if P003 > 10 in 5 s.
3	1	Operation enabled	Control and inverter pulses are enabled.
	0	Operation disabled	Control and inverter pulses are disabled.
4	1	Condition for operation	Ramp generator is enabled.
	0	Ramp generator disabled	Output of ramp generator ramps down, inverter remains in ON state.
5	1	Ramp generator enabled	
	0	Stop ramp generator	Freezes the setpoint currently defined by the ramp generator.
6	1	Setpoint enabled	Selected value at the ramp generator input is activated.
	0	Setpoint disabled	Selected value at the ramp generator input is set to 0. Inverter remains in ON state.

© Siemens plc 2000 / 2001

7	1 0	Acknowledge No meaning	Fault message is acknowledged on positive edge, inverter subsequently switches to 'start disable'.
8	1 0	Jog clockwise No jog	CB15/CB155: Jog clockwise (only in conjunction with bit 0 = high. bit 3 = low).
9	1 0	Jog counter-clockwise No jog	CB15/CB155: Jog counter-clockwise (only in conjunction with bit 0 = high. bit 3 = low).
10	1 0	PZD valid PZD invalid	The process data transmitted by the master is valid. The process data transmitted by the master is invalid. All bits of the control word are ignored, except bits 1 and 2 (OFF2, OFF3)
11			free
12			free
13			free
14	1 0	Rotate clockwise Rotate counter-clockwise	On/clockwise On/counter-clockwise
15	1 0		free

Table 5-10: Bit Word Definition

Control Word Example:

Typical control word: 447E initialises the drive (status word 4331), 447F gives the ON command. Normal ramp stop (OFF1) when control word is changed to 447E.

Note:

The drive will not start unless bit 0 is changed from 0 to 1.

© Siemens plc 2000 / 2001

5.1.3.2 Status Word (ZSW)

The status word matches the definition in the PROFIBUS 'variable speed drives' profile.

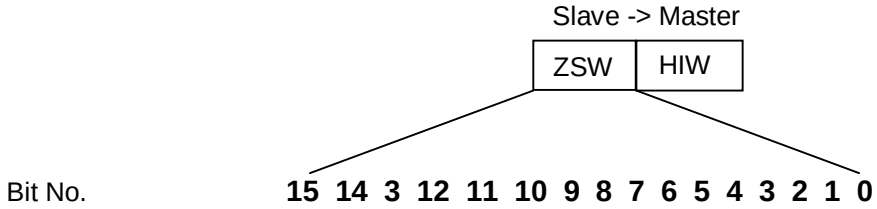

Bit	Value	Meaning	Notes
0	1 0	Ready to start Not ready to start	Power is on, electronics initialised, pulses disabled.
1	1 0	Ready to start Not ready to start	Inverter is on (ON command is active), there is no fault. Inverter can start up with 'operation enable'. Causes: ON command is not active, fault is active, OFF2 or OFF3 is active, start disable active.
2	1 0	Operation enabled Operation disabled	*See control Word, bit 3*
3	1 0	Fault No Fault	Drive malfunction and therefore not in operation, switches to start disable following acknowledgement and fault elimination. Error numbers in fault parameter.
4	1 0	No OFF2 OFF2 command active	
5	1 0	No OFF3 OFF3 command active	
6	1 0	Start disable No start disable	Start only through OFF1 and then ON.
7	1 0	Warning No warning	Drive still in operation, no acknowledgement required.
8	1	Not used	Value always transmitted with log 1.
9	1 0	Control request Local operation	The automation system is requested to take control. Control only possible on unit (locally).
10	1 0	f reached f not reached	Inverter output frequency matches setpoint. Inverter output frequency less than setpoint.
11			Not used
12			Not used
13			Not used
14	1 0	Clockwise rotation Counter-clockwise rotation	Inverter output voltage has clockwise rotation field. Inverter output voltage has counter- clockwise rotation field.
15			Not used

Table 5-11: Status Word Definition

© Siemens plc 2000 / 2001

5.1.3.3 Main Setpoint (HSW)

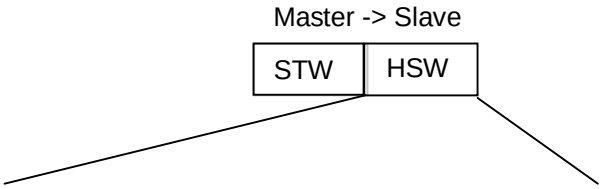

Bit No. **15 14 13 12 11 10 9 8 7 6 5 4 3 2 1 0**

The main setpoint is a 16-bit word in which the required frequency setpoint is transmitted to the inverter. The setpoint is transmitted as an unsigned whole number (0 to 32767). The value 16384 (4000 Hex) corresponds to 100%.

IMPORTANT NOTE

Due to the Two's complement method used to calculate the frequency reference in the USS protocol, speed reference transmitted value is 7FFF (hex).
Values above this will cause reverse rotation !

Parameter P094 is used to scale the 100% value to a plant frequency. The frequency value entered in this parameter corresponds to a setpoint of 100% on the serial interface.

The output frequency of the inverter is calculated as follows:
f = (HSW x P94)/16384

5.1.3.4 Main Actual Value (HIW)

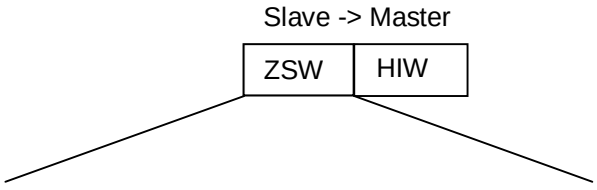

Bit No. **15 14 13 12 11 10 9 8 7 6 5 4 3 2 1 0**

The main actual value is a 16-bit word in which the actual frequency output of the inverter is transmitted. The scaling of the value is the same as the setpoint *(see section 5.1.3.3).*

5.1.4 Watchdog Timeout

When communication starts, the PROFIBUS-DP master transmits a value t_{WD} to the CB15/CB155 for the watchdog. The watchdog on the unit is activated or deactivated according to the transmitted value. When the watchdog is active, the CB15/CB155 monitors communication with the PROFIBUS-DP master. If the watchdog time expires and the inverter is being controlled over the PROFIBUS link, the inverter will trip with an error message (F030).

© Siemens plc 2000 / 2001

5.2 Settings on the PROFIBUS-DP Master

Use the device master file for configuring the PROFIBUS-DP system or use the type description file with suitable configuring software for the PROFIBUS-DP master (e.g. COM ET 200 V4.x). Both files are included on the floppy disc supplied with the CB15/CB155. The device master file (SIEM8046.GSD) and the description file (SI8046AX.200, SI8046TD.200) are ASCII files.

With Step 7 the CB15/CB155 can be called up from the Profibus hardware menu; there is no need to use the .GSD file.

5.2.1 Setting the PPO Type from the Master

Identification bytes are transmitted in the configuration frame of the PROFIBUS-DP master. These bytes define the PPO type of the user data frame. This is possible, for example, on the SIMATIC S5 with the IM308B/C PROFIBUS-DP module.

The CB15/CB155 only recognises PPO types 1 and 3. When the CB15/CB155 receives an unknown identification byte combination, it enables the 'configuration error' bit in the diagnostics frame to the PROFIBUS-DP master.

PPO	Identification byte 0			Identification byte 1			COM ET 200
Type	Dec	Hex	COM	Dec	Hex	COM	Version
1	243	F3	4AX	241	F1	2AX	V4 x/V5.x
3	0	0	0	241	F1	2AX	V4.x/V5.x
3	241	F1	2AX	0	0	0	V4.x/V5.x
3	241	F1	2AX				V4.x/V5.x

Table 5-12: Value Table for the Identification Bytes

Identification bytes 0 and 1 in decimal (dec) and hexadecimal (hex) notation apply generally for PROFIBUS-DP. The notation (COM) for the COM ET 200 configuring software is **specific to this softwar**e. The COM ET 200 configuring software is **exclusively** for the IM308B/C PROFIBUS-DP master module of the SIMATIC S5 system.

5.2.2 Setting the PPO Type on the CB15/CB155

On PROFIBUS-DP master systems where it is not possible to specify the PPO type in the identification bytes for the inverter (e.g. CP5431 for SIMATIC S5), valid PPO type is PPO type 1.

5.3 Initial Communication with the CB15/CB155

The following operations must be performed in order to establish correct communication between the CB15/CB155 and the PROFIBUS master:

- The bus cable must be connected correctly between the 2 devices.
- The PROFIBUS master must be configured correctly to allow communication with a DP Slave using PPO type 1 or PPO type 3 (only PPO type 1 if the PPO type cannot be configured remotely).
- The correct Type Description File must have been used in the case of COM ET 200 software for configuring an IM308B/C as bus master.
- The bus must be running (the switch on the front panel set to RUN in the case of a SIMATIC module).
- The bus baud rate must not exceed 12 MBd.
- The inverter must be switched on.
- The slave address for the CB15/CB155 (parameter P918) must be set to match the slave address configured at the PROFIBUS master and must be unique on the bus.
- All necessary EMC precautions (described in section 2) must have been taken.

© Siemens plc 2000 / 2001

6 PROFIBUS TROUBLESHOOTING

The error messages, fault causes and remedial measures required are described in section 5. If communication over the PROFIBUS link is not successful, check the causes listed for fault codes F030 and F033.

6.1 Diagnostic Parameters

The CB15/CB155 stores diagnostics information in a diagnostics buffer for installation and service purposes. The diagnostics information can be read out with the indexed parameter P880.i (diagnostics).

The diagnostics buffer assignment on the CB15/CB155 is as follows:

P880.i	Meaning
P880.0	Counter: error-free message frames received (in hex)
P880.1	P918 mirror (station address) (in hex).
P880.2	No. of identification bytes received by master
P880.3	No. of PKW bytes
P880.4	No. of PZD bytes
P880.5	PPO Type
P880.6	Counter: FREEZE
P880.7	Counter: CLEAR_DATA
P880.8	Counter: SYNC
P880.9	Group identifier
P880.10	Watchdog
P880.11	Counter: watchdog timeout
P880.12	Address of PROFIBUS master
P880.13	Slave status
P880.14	Baud rate
P880.15	Warning bits

Table 6-1: PROFIBUS Diagnostic Parameters

© Siemens plc 2000 / 2001

Meaning of the CB15/CB155 diagnosis:

P880.0 (Counter: error-free message frames received) Is incremented when a net data frame is received without an error.

P880.1 (P918 mirror)
Station address entered.

P880.2 (No. of identification bytes)
Must be 1 or 2 (or 25 when used with SIMATIC S5/S7), otherwise an F033 is triggered.

P880.3 (No. of PKW bytes)
No. of PKW bytes detected. Must be 0 or 8, otherwise an F033 is triggered.

P880.4 (No. of PZD bytes)
No. of PZD bytes detected. Must be 4, otherwise an F033 is triggered.

P880.5 (PPO type)
Detected PPO type. Must be 1 or 3, otherwise an F033 is triggered.

P880.6 (Counter: FREEZE)
Is incremented when a FREEZE frame is received.

P880.7 (Counter: CLEAR_DATA)
Is incremented when a CLEAR_DATA frame is received.

P880.8 (Counter: SYNC)
Is incremented when a SYNC frame is received.

P880.9 (Group identifier)
The group identifier of the parameter telegram is entered.

P880.10 (Watchdog)
The watchdog time of the parameter telegram is entered.

P880.11 (Counter: watchdog timeout)
Is incremented when the watchdog time expires.

P880.12 (Address of PROFIBUS master)
Address of the PROFIBUS master which has configured the CB15/CB155.

P880.13 (Slave status)
Mirror of the software status:

1. Software not yet initialised.
2. CB15/CB155 awaiting PROFIBUS parameterisation.
3. CB15/CB155 awaiting PROFIBUS configuration.
4. CB15/CB155 is in cycle mode.
5. Watchdog timeout.

P880.14 (Baud rate)
Only used for internal purposes. The detected baud rate is contained in parameter P963.

© Siemens plc 2000 / 2001

P880.15 (Warning bits):

15	14	13	12	11	10	9	8	7	6	5	4	3	2	1	0	Bit

No bits are enabled during normal operation.

Bit 0: Incorrect identification number received from master (F030 is triggered).
Bit 1: PROFIBUS software not initialised.
Bit 2: PROFIBUS software initialised but not yet enabled.
Bit 4: Incorrect number of identification bytes received by master (F033 is triggered).
Bit 5: Incorrect number of PKW or PZD bytes received by master (F033 is triggered).
Bit 8: Baud rate not detected.
Bit 9: CLEAR_DATA received.
Bit 10: CB15/CB155 in SYNC mode.
Bit 11: Watchdog timeout (F030 is triggered).
Bit 12: No connection to master (F030 is triggered).

6.2 Diagnostics with a Class 2 Master

A Class 2 master can be used for installation and diagnostic purposes.

An example of a Class 2 master is a PG Programmer or a PC fitted with a CP5412 communications processor and running the COM ET 200 software package. Note that for this to function correctly, the IM308B/C must be configured to allow a Class 2 master to be connected to the bus. Information on how to achieve this and on how to control a slave device from the COM ET 200 software are included in the COM ET 200 software manual.

Note that the Class 2 master may also be used without the IM308B/C being enabled on the bus. The Class 2 master may also be connected directly to the D-type connector on the CB15/CB155 if desired.



WARNING

When using a Class 2 master to control a slave device, the PROFIBUS watchdog is not enabled. This means that if no Class 1 master (e.g. a PLC) is enabled and the Class 2 master is disabled or the bus is disconnected while the inverter is running then the drive will continue to run.

In installation/test mode, the Class 2 master assumes the function of the Class 1 master for the selected station. The exchange of user data with the selected slave does not take place cyclically.

© Siemens plc 2000 / 2001