SIEMENS

Molded Case Circuit Breakers

IPS

JD & LD Frame Information and Instruction Guide



store.ips.us

Bulletin IPIM-0273D

Courtesy of store.ips.us

⚠ DANGER

Hazardous voltages are present inside the enclosures or panels in which the circuit breakers are installed. Death, serious injury, and/or equipment damage will result if circuit breakers are improperly applied or precaution is not used.

De-energize all incoming power prior to installation of circuit breakers or associated accessories.

Only qualified personnel should work on or around this equipment.

Position of circuit breaker handles shown in this booklet is for illustration purposes only. Circuit breakers are to be installed in OFF or TRIPPED position only.



Courtesy of store.ips.us

JD & LD- Frame Circuit Breakers 2 and 3-pole; 200-600 Amperes

Types JXD2(-A), JD6(-A), JXD6(-A), HJD6(-A), HJXD6(-A), HHJD6, HHJXD6, CJD6(-A), LD6(-A), LXD6(-A), HLD6(-A), HLXD6(-A), HHLD6, HHLXD6, CLD6(-A), JXD6-ETI, LXD6-ETI, CJD6-ETI, CLD6-ETI

Table of Contents

Important Notices 2

General Information 3-4

Dimensional Reference Drawings 5-6

Pressure Wire Connectors 7

Compression Connector 8

Handle Blocking Device 9

Padlocking Device 9

Trip Unit 10-11

Rear Connecting Studs 12-13

Plug-In Adapters 14-15

Mechanical Interlock 16-19

Operating Characteristics:
Time Current Curves 20-23
Let-Thru Curves 24-25

Accessories:
Shunt Trip, Undervoltage Trip, Auxiliary Switch and Bell Alarm Switch Installation 26-27
Accessory Combinations 27
Shunt Trip and Undervoltage Trip Electrical Check 28
Auxiliary Switch and Bell Alarm Switch Electrical Check 29
Rotary Handle Operator (D11CJU2) 30-31
Rotary Handle Operator (RHOJSD, RHOJVD) 32-33
TELEMAND® Electric Motor Operator 34-36
Max-Flex™ Flange-Mounted Handle Operator 37-40
Door Latch Mechanism 41-42
Enclosures 43-44
Connecting Straps 45

Ordering Information:
Circuit Breaker Catalog Numbers 46-50
Circuit Breaker Accessory Catalog Numbers 51-52

Miscellaneous:
UL Listings and File Numbers 53
Industry Specifications 53

store.ips.us

Courtesy of store.ips.us

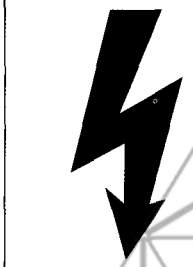

⚠ DANGER

Hazardous voltages are present in the equipment which will cause death or severe personal injury and product failure. Always de-energize and ground the equipment before maintenance. Maintenance should be performed only by qualified personnel. The use of unauthorized parts in the repair of the equipment or tampering by unqualified personnel will result in dangerous conditions which can cause severe personal injury or equipment damage. Follow all safety instructions contained herein.

IMPORTANT

The information contained herein is general in nature and is not intended for specific application purposes nor is it intended as a training manual for unqualified personnel. Refer to Note for definition of a **qualified person.*** It does not relieve the user of responsibility to use sound practices in application, installation, operation and maintenance of the equipment purchased or in personnel safety precautions. Should a conflict arise between the general information contained in this publication and the contents of drawings or supplementary material or both, the latter shall take precedence. Siemens Energy & Automation, Inc. reserves the right to make changes in specifications shown herein or add improvements at any time without notice or obligation.

store.ips.us

NOTE

***Authorized and qualified personnel–**

For the purpose of this manual a qualified person is one who is familiar with the installation, construction or operation of the equipment and the hazards involved. In addition, he has the following qualifications:

(a) **is trained and authorized** to de-energize, clear, ground, and tag circuits and equipment in accordance with established safety practices.

(b) **is trained** in the proper care and use of protective equipment such as rubber gloves, hard hat, safety glasses or face shields, flash clothing, etc., in accordance with established safety practices.

(c) **is trained** in rendering first aid.

SUMMARY

These instructions do not purport to cover all details or variations in equipment, nor to provide for every possible contingency to be met in connection with installation, operation, or maintenance. Should further information be desired or should particular problems arise which are not covered sufficiently for the purchaser's purposes, the matter should be referred to the local sales office, listed on back of this instruction guide.

The contents of this instruction manual should not become part of or modify any prior or existing agreement, commitment or relationship. The sales contract contains the entire obligation of Siemens Energy & Automation, Inc. The warranty contained in the contract between the parties is the sole warranty of Siemens Energy & Automation, Inc. Any statements contained herein do not create new warranties or modify the existing warranty.

Information and Instructions

General Information

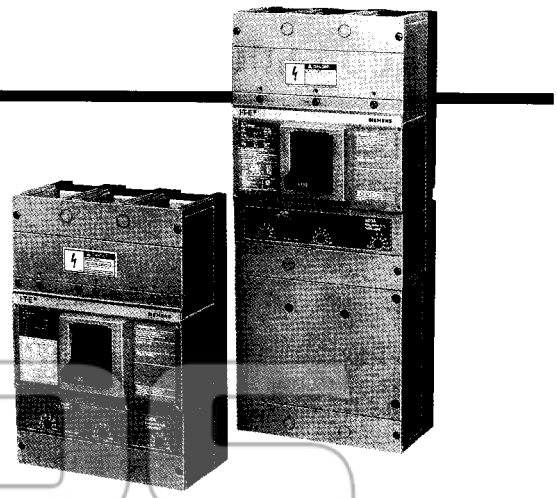

Breaker Ampere Rating	Nominal Instantaneous Values							
	Low	2	3	4	5	6	7	High
200-300	1250	1430	1610	1790	1960	2140	2320	2500
350-450	2000	2290	2570	2860	3140	3430	3710	4000
500-600	3000	3430	3860	4290	4710	5140	5570	6000

General

JD and LD-Frame Sentron™ Series Circuit breakers, as shown on pages 5 and 6, are for use in individual enclosures, switchboards and panelboards. They are available as thermal magnetic with interchangeable trip units (types JD6(-A), HJD6(-A), HHJD6, LD6(-A), HLD6(-A), HHLD6), thermal magnetic with non-interchangeable trip units (types JXD2(-A), JXD6(-A), HJXD6(-A), HHJXD6, LXD6(-A), HLXD6(-A), HHLXD6), current limiting with non-interchangeable trip units (types CJD6 and CLD6) instantaneous magnetic trip only (motor circuit protectors – types JXD6-ETI, LXD6-ETI, CJD6-ETI, CLD6-ETI) and molded case switches (types JXD2, JXD6, LXD6, CJD6, CLD6). For 100 percent applications see pages 46 thru 50.

CJD6 and CLD6 circuit breakers combine thermal magnetic construction for overload protection and an additional set of "blow-apart" contacts in conjunction with the Sentron Series standard "blow-apart" contacts. This arrangement provides for current limiting protection under high fault interrupting conditions as outlined in the National Electric Code, Article 240-11① and UL 489② standards. CJD6 and CLD6 circuit breakers are fuseless and therefore require no blown fuses to be located and replaced should a high current fault occur. The common trip feature of the circuit breaker is completely retained so that all poles of the circuit breaker open when caused to trip due to an overload or short circuit.

Pressure wire connectors, suitable for use with aluminum or copper wire, are available for all JD and LD-Frame circuit breakers. Rear connection studs or plug-in connector assemblies are also available (2 and 3-pole). The latter mounting arrangement permits removal of the circuit breaker from a circuit without removing wiring leads. Special features such as a shunt trip, auxiliary and alarm switches and undervoltage trip devices are available for field adaptation. The installation and removal of these devices is to be accomplished by qualified personnel only. These devices are mounted internally and Underwriters Laboratories listed, page 53. Information concerning these special devices is found on pages 26-29 and 51.

Thermal Magnetic

JXD2(-A), JD6(-A), JXD6(-A), HJD6(-A), HJXD6(-A), HHJD6, HHJXD6, CJD6, LD6(-A), LXD6(-A), HLD6(-A), HLXD6(-A), HHLD6, HHLXD6, CLD6 type circuit breakers provide complete overload and short circuit protection when applied within their design parameters. Overload and short circuit tripout is accomplished by time-delay thermal trip elements and instantaneous magnetic trip devices. Nominal instantaneous trip values are externally adjustable with eight trip points as shown at the top of the next column.

① National Electric Code (240-11)
"A current limiting overcurrent protective device, which, when interrupting currents in its current limiting range, will reduce the current flowing in the faulted circuit to a magnitude substantially less than that obtainable in the same circuit, if the device were replaced with a solid conductor having comparable impedance."

② Underwriters Laboratories (UL 489, Par. 2.5)
"A circuit breaker that does not employ a fusible element and that when operating within its current limiting range, limits the let-through I^2t to a value less than the I^2t of a 1/2 cycle wave of the symmetrical prospective current."

Circuit breakers are calibrated at the factory, under controlled temperature conditions for applications at 40°C (104°F) ambient to meet requirements as outlined in UL 489 Standard for molded case circuit breakers. The cover on the trip unit is sealed to prevent access to the trip elements. Alterations of the calibration of these elements should not be attempted. Removal of the special sealed line cover voids the Underwriters Laboratories, Inc. listing for that specific circuit breaker. Catalog information is located on pages 46-50.

Molded Case Switch

A molded case switch is available in the JXD2, JXD6, LXD6, CJD6, CLD6 type circuit breakers. This device employs the same operating mechanism as the thermal magnetic and magnetic only units. A preset instantaneous function is factory installed to allow the switch to trip and protect itself at a high fault condition. No overload or low fault current protection is provided. This protection must be supplied by separate overcurrent devices. Catalog information is located on pages 46-50.

store.ins.us

Interrupting Ratings–Symmetrical RMS Amperes (kA) Based on UL 489 Standards

The interrupting ratings of the JD and LD-Frame circuit breakers are based on circuits adjusted to the rated short circuit (at specified voltage) before the insertion of the circuit breaker.

Breaker Type	RMS Symmetrical Amperes (kA)											
	UL A.I.R. kA					IEC A.I.R. kA					
	Volts AC			Volts DC		Volts AC (50/60 Hz)					
	240	480	600	250	500	220/240		380/415		500	
						(Icu)	(Ics)	(Icu)	(Ics)	(Icu)	(Ics)
JXD2(-A)	65	–	–	30(2-P)	–	–	–	–	–	–	–
JD6(-A), JXD6(-A) LD6(-A), LXD6(-A)	65	35	25	30(2-P)	25(3-P)	65	33	40	20	30	15
HJD6(-A) HLD6(-A) HJXD6(-A) HLXD6(-A)	100	65	35	30(2-P)	35(3-P)	100	50	65	33	42	21
HHJD6, HHLD6	200	100	50	–	–	200	100	100	50	65	33
CJD6(-A)□ CLD6(-A)	200	150	100	30(2-P)	50(3-P)	200*		150*		–	

*Meets IEC 157-P1 Interruption levels

Operation and Maintenance

Instantaneous Trip

ETI motor circuit interrupters, types JXD6-ETI, LXD6-ETI, CJD6-ETI, CLD6-ETI (adjustable instantaneous magnetic trip only) are designed for use in welding circuits, motor circuits and combination starters where short circuit protection only is required. When used in combination starters, they serve in conjunction with motor protective relays to offer complete protection. The relays guard against motor overloads and the circuit breaker provides short circuit protection. Catalog information is located on page 50.

Instantaneous Trip Adjustments

Motor Full Load Amperes	ETI Trip Setting①		Ampere Rating
	Adjustment	Amperes	
95-110	Low	1250	
110-124	2	1430	400
124-138	3	1610	Low
138-151	4	1790	JXD62L400
151-165	5	1960	JXD63L400
165-178	6	2140	CJD62L400
178-192	7	2320	CJD63L400
192-227	High	2500	
154-176	Low	2000	
176-198	2	2290	400
198-220	3	2570	Standard
220-242	4	2860	JXD62H400
242-264	5	3140	JXD63H400
264-285	6	3430	CJD62H400
285-308	7	3710	CJD63H400
308-326	High	4000	
155-176	Low	2000	
176-198	2	2290	600
198-220	3	2570	Low
220-242	4	2860	LXD62L600
242-264	5	3140	LXD63L600
264-285	6	3430	CLD62L600
285-308	7	3710	CLD63L600
308-326	High	4000	
231-264	Low	3000	
264-292	2	3430	600
292-330	3	3800	Standard
330-362	4	4290	LXD62H600
362-395	5	4710	LXD63H600
395-428	6	5140	CLD62H600
428-462	7	5570	CLD63H600
462-490	High	6000	

① All values calibrated within guidelines of UL 489.

The instantaneous settings indicated are based on 11 times full load motor current – use of this table must take into consideration that any setting should be done in accordance with applicable sections of the NEC to assure proper short circuit protection as well as the ability to allow the motor to start without nuisance tripping.

Circuit Breaker Operation

With the mechanism latched and the contacts open, the operating handle will be in the OFF position. Moving the handle to the ON position closes the contacts and establishes a circuit through the breaker. Under overload or short circuit conditions sufficient to automatically trip or open the breaker, the operating handle moves to a position between ON and OFF. To relatch the circuit breaker after automatic operation, move the operating handle to the extreme OFF position. The circuit breaker is now ready for reclosing.

The overcenter toggle mechanism is trip free of the operating handle. The circuit breaker, therefore, cannot be held closed by means of the handle should a tripping condition exist. After automatic operation, the handle assumes an intermediate position between ON and OFF, displaying a clear indication of tripping.

Maintenance

Experience has shown that properly applied molded case circuit breakers normally do not require maintenance. However, some industrial users may choose to establish an inspection and maintenance procedure to be carried out on a regular basis. For detailed information, consult applicable NEMA publications or your local Siemens sales office.

store.ips.us

SPECIAL NOTE:

JXD2(-A), JXD6(-A), HJXD6(-A), LXD6(-A), HLXD6(-A), CJD6, CLD6 circuit breakers are not UL listed as interchangeable trips–DO NOT REMOVE TRIP UNIT and replace with another. Removal of trip unit voids UL listing.

JXD2(-A), JXD6(-A), HJXD6(-A), LXD6(-A), HLXD6(-A), type circuit breakers are UL listed for reverse connection applications.

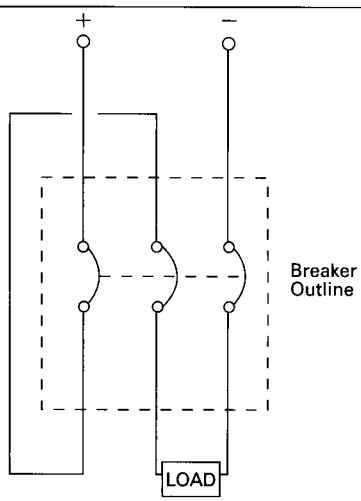

Wiring Diagram for 500V dc 3-Pole–Ungrounded Systems Only

Figure 1

Courtesy of store.ips.us

JD and LD-Frame Outline Drawings①–2 and 3 Pole②

Types JXD2(-A), JD6(-A), JXD6(-A), HJD6(-A), HJXD6(-A), HHJD6, HHJXD6, LD6(-A), LXD6(-A), HLD6(-A), HLXD6(-A), HHLD6, HHLXD6, JXD6-ETI, LXD6-ETI

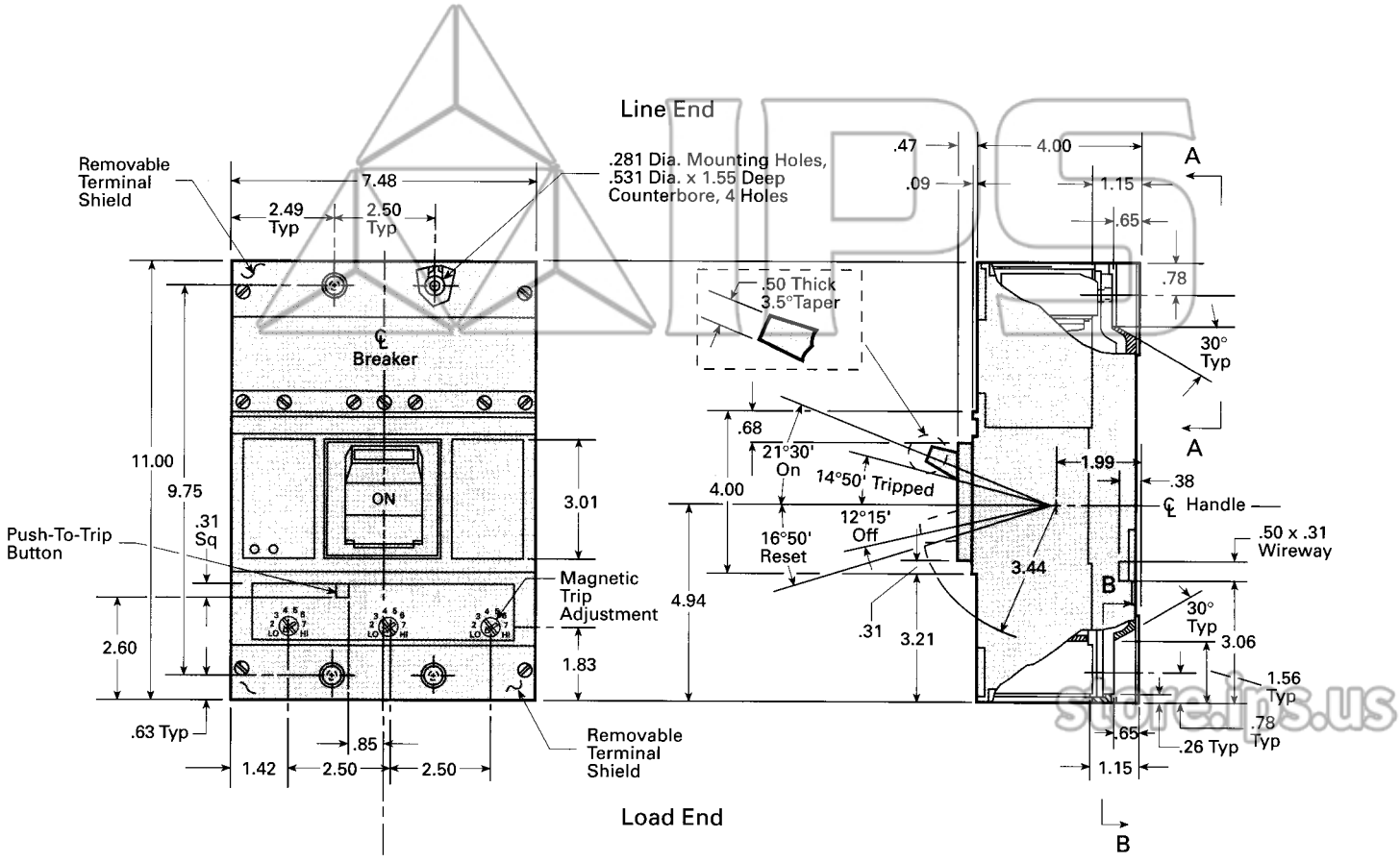

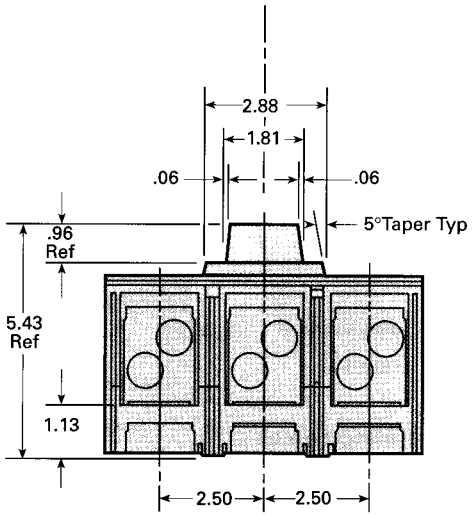

End View

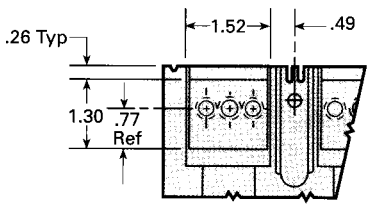

Detail A

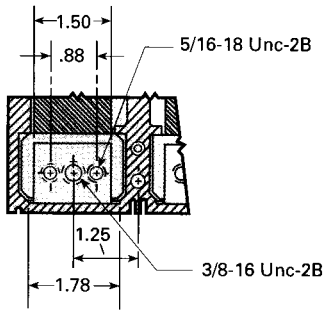

Detail B

Handle Operating Forces

Operation	JD-Frame (lb.)	LD-Frame (lb.)
OFF to ON	44	44
ON to OFF	50	44
TRIPPED to RESET	60	60

① All drawing dimensions are shown in inches.

② Two and 3-pole breakers are the same physical size. Current carrying parts are omitted from the center in 2-pole breakers.

Courtesy of store.ips.us

JD and LD-Frame Outline Drawings①–2 and 3 Pole②

Types CJD6(-A), CLD6(-A), CJD6-ETI, CLD6-ETI

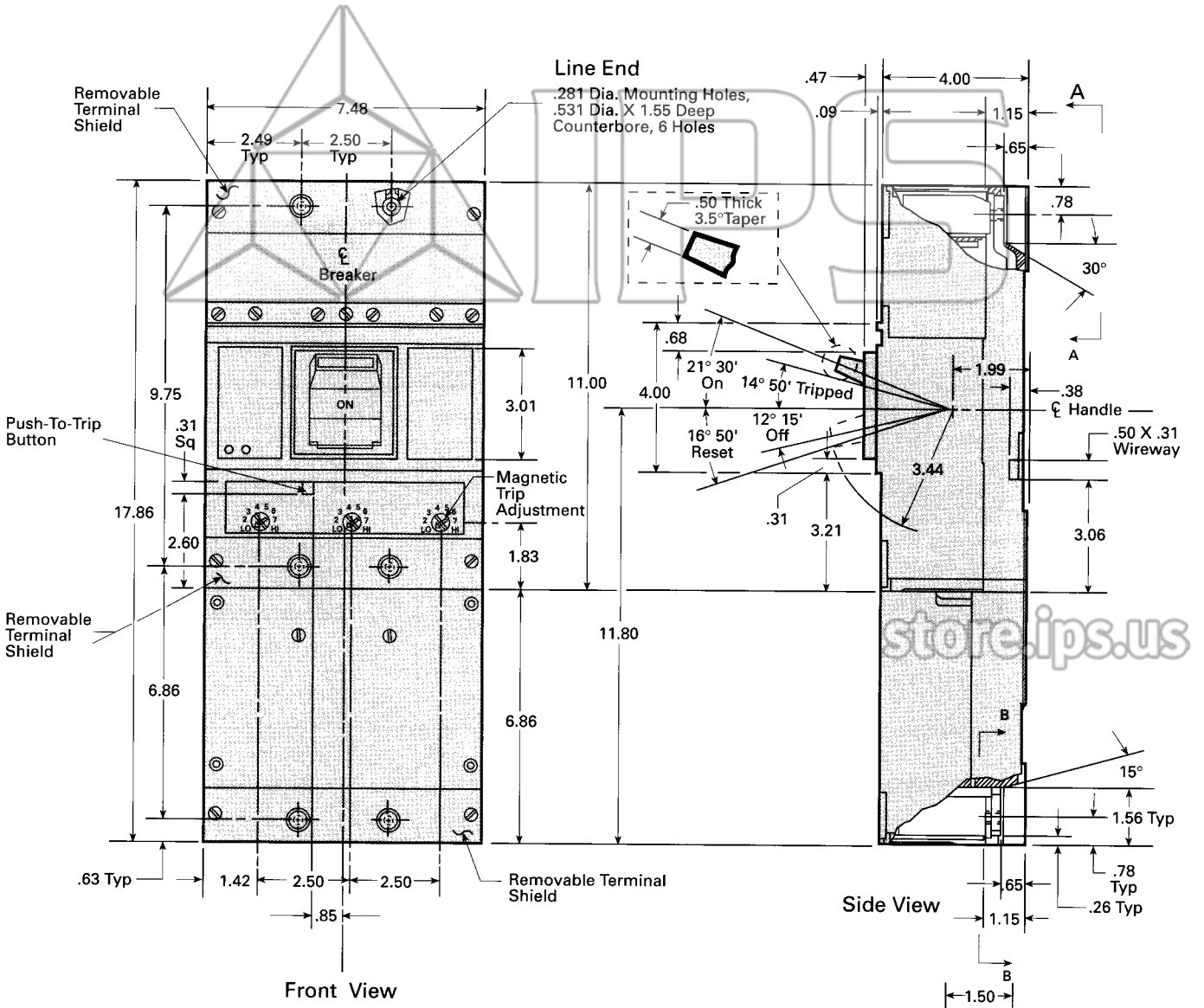

Handle Operating Forces

Operation	JD-Frame (lb.)	LD-Frame (lb.)
OFF to ON	44	44
ON to OFF	50	44
TRIPPED to RESET	60	60

① All drawing dimensions are shown in inches.

② Two and 3-pole breakers are the same physical size. Current carrying parts are omitted from the center in 2-pole breakers.

Courtesy of store.ips.us

Pressure Wire Connectors

⚠ DANGER

Hazardous Voltage.
Will cause death or severe injury.

Turn power off supplying switchboard or panel before installing.

⚠ Safety Instructions

General
Each connector kit contains a solderless connector and associated hardware for making one line or load connection.

Installation
NOTE: Trip unit must be installed in circuit breaker prior to mounting load end connector.

A. Tighten mounting screws **(1)** to securely attach connector. See table for torque values.

B. Tighten set screws **(2)** securely to prevent overheating of conductor and connector. See table for torque values.

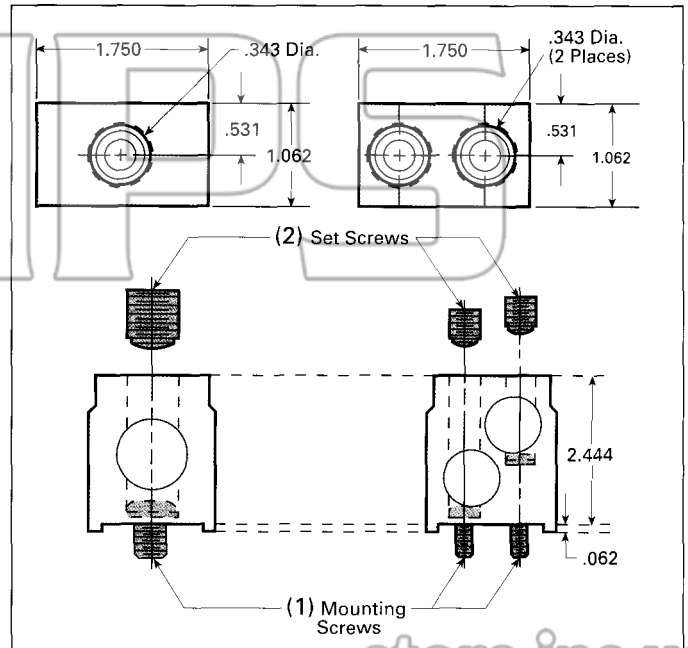

Figure 1

Connector Catalog Numbers	Circuit Breaker Ampere Rating	Connector Wire Range	Set Screw Torque (in-lbs.)	Mounting Screw Torque (in-lbs.)	For Use With Frames
 TA2J6500	200-600	(1-2) #3/0-500 kcmil (Cu) (1-2) #4/0-500 kcmil (Al)	300 300	132	JD-LD
 TA1L6750	250-600	(1) #500-750 kcmil (Al) (1) #500-600 kcmil (Cu)	500 500	228	JD-LD
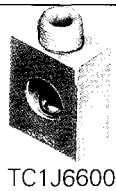 TC1J6600	200-600	(1) #3/0-600 kcmil (Cu)	500	228	JD-LD
 TC2J6500	200-600	(1-2) #3/0-500 kcmil (Cu)	300	132	JD-LD

⚠ DANGER

Hazardous Voltage.
Will cause death or severe injury.

Turn power off supplying switchboard or panel before installing.

⚠ Safety Instructions

General

NOTE: This instruction sheet outlines the recommended installation procedure. Use of these lugs in some installations may result in less wire bending space than is specified in the National Electric Code.

Installation of Compression Connector

A. Turn off power supplying device before installation of compression lugs.

B. Remove any existing wire connectors from circuit breaker.

C. Install circuit breaker.

D. Preform cables to final configuration and strip insulation back 1-1/16" on each conductor. Use an appropriate insulation stripping tool to avoid damaging the conductor. (See Figure 1.)

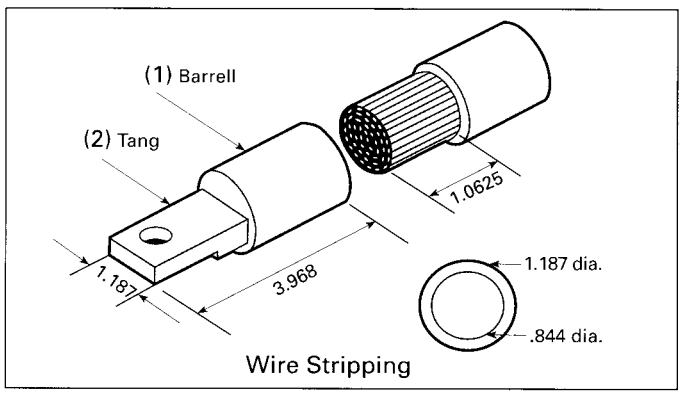

Wire Stripping

Figure 1

E. Clean aluminum conductor surfaces thoroughly with a wire brush or other suitable means, to remove oxides and other contaminants from the conductor.
NOTE: Copper wires and the compression connector should not be cleaned abrasively.

F. Remove cap from compression connector and insert cable fully into barrel **(1)** (Figure 1) of connector.

G. Insure that connector tang(s) **(2)** (Figure 1) are in their proper orientation prior to crimping. This helps avoid twisting of cables during installation.

H. Select an appropriate tool and die combination from Table 1 and make the required number of crimps within the boundaries stamped on the connector barrel. Refer to Figure 2 for sequence of multiple crimps.

Table 1–Compression Tool and Die Chart For Copper and Aluminum Conductors

Wire Size	Tool Mfgr.	Tool No.	Die No.	No. of Crimps
500 kcmil	Homac	UT-15	94, 96	2
500 kcmil	Burndy	Y 35	655, 321 316	3 3
500 kcmil	Kearny	WH-2	1-1/8-2 1-1/8-1	2 2
1/0-500 kcmil	Square D	VC-6	–	2

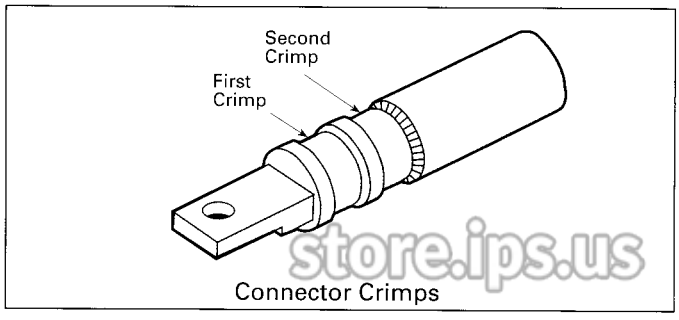

Connector Crimps

Figure 2

I. Remove any inhibitor compound expelled during the crimping operation from the connector body and the cable insulation.

J. Slip insulating cover over connector tang and then over connector barrel so that only the connector tang is exposed (Figure 3).

Warning: Short spacings will result if Step J is not followed.

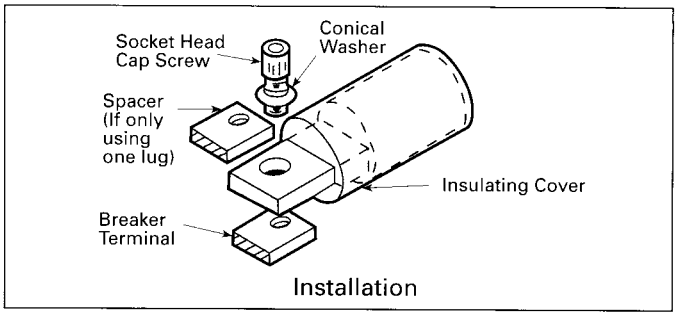

Installation

Figure 3

K. Position connector tang on top of the circuit breaker terminal pad and secure with 3/8-16 x 1-1/2" socket head cap screw and conical spring washer. Conical spring washer is to be installed with convex side of washer toward underside of screw head (Figure 3). Torque screw to 228 in-lbs.

NOTE: If only using one lug for proper ampacity, insert spacer supplied with kit between spring washer and compression lug.

Courtesy of store.ips.us

Handle Locking Devices

Attaching Handle Blocking Device (JD6HBL)

To Block Handle ON
Turn Breaker ON. Assemble blocking device to breaker by positioning over handle as shown, with handle opening of blocking device toward the line end. Insert tab **A** into slot **A1**. Push toward handle and downward in area shown (Figure 1) until tab **B** drops into slot **B1** (Figure 2).

To Block Handle OFF
Turn Breaker OFF. Reverse handle blocking device so that handle opening of blocking device is toward the load end. Insert tab **A** into slot **B1**. Push toward handle and downward in area shown until tab **B** seats in slot **A1** (Figure 3).

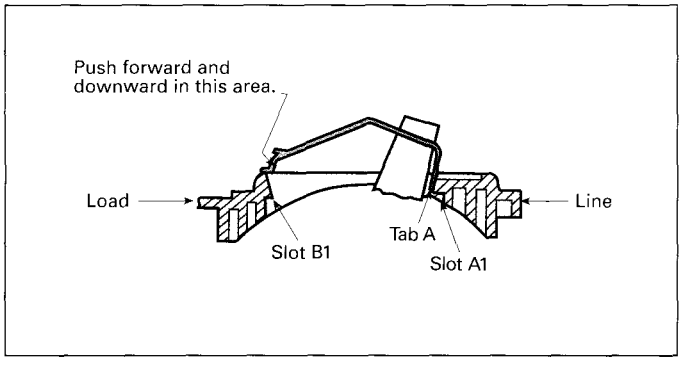

Figure 1

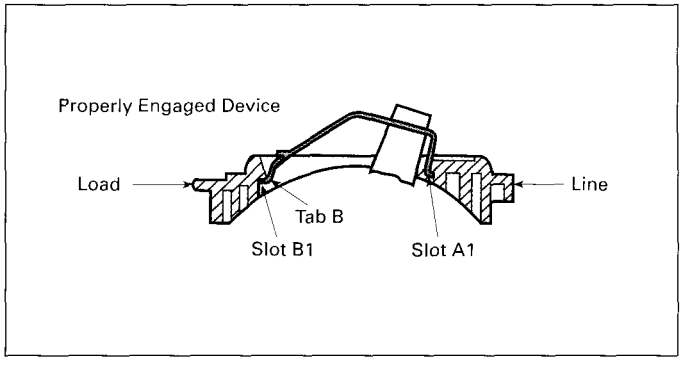

Figure 2

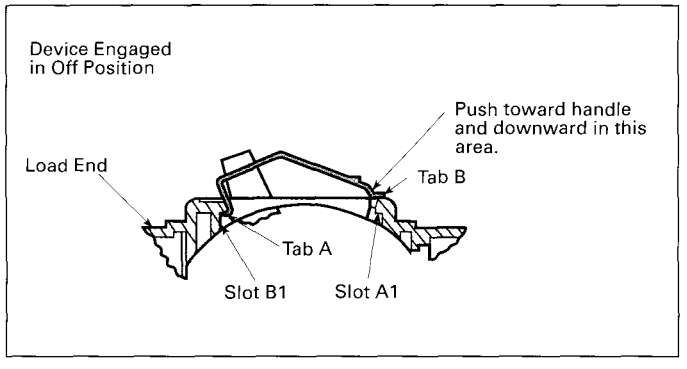

Figure 3

Attaching Padlocking Device (JD6HPL)

With breaker in TRIPPED position, assemble padlocking device to breaker by positioning over handle as shown. Insert tab **A** into slot **A1**. Pivot tab **B** into slot **B1** until surface **D** is resting on surface **C** (Figure 4). Install #6-32 x .188 non-removable screws (2 places).

To Lock Handle OFF
To padlock handle in OFF position, move breaker handle to OFF and move slider to the right until .375" dia. holes line up, allowing padlock to be installed (Figure 5).

To Lock Handle ON
To padlock circuit breaker in ON position, enlarge 12" dia. hole of slider to .375" dia. before assembly to breaker. File away burrs after drilling. Assemble padlocking device to breaker as explained above, then turn breaker ON and install padlock.

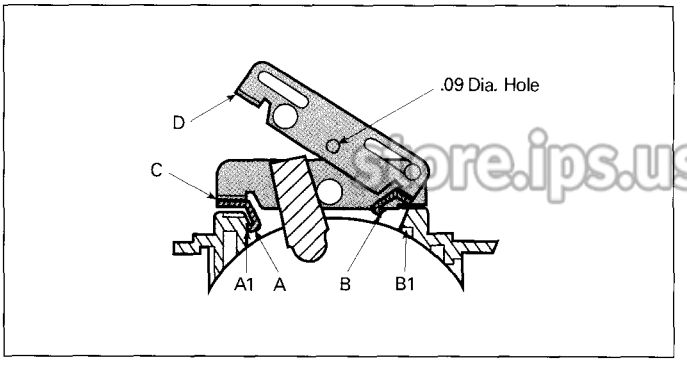

Figure 4

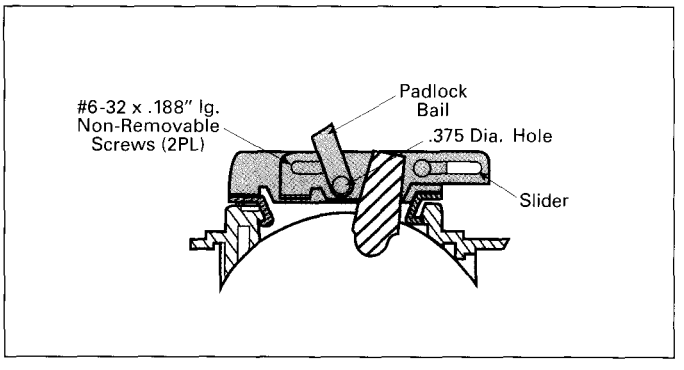

Figure 5

store.ips.us

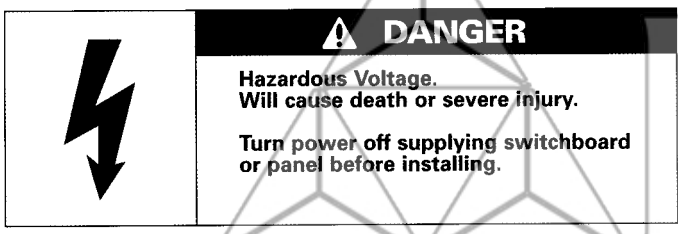

Safety Instructions

General

The JD6 trip units are available in 200, 225, 250, 300, 350 and 400 ampere ratings. The LD6 trip units are available in 450, 500 and 600 ampere ratings.

These devices have adjustable magnetic trip settings. The 200 through 300 ampere trip units have a magnetic adjustment range from 1250 to 2500 amperes. The 350 through 450 ampere trip units have a magnetic adjustment range from 2000 to 4000 amperes. The 500 and 600 ampere trip units have a range from 3000 to 6000 amperes. Ranges for dc operation are 15 percent higher.

See breaker frame label or consult Siemens Energy and Automation, Inc. sales office for complete catalog number information. Trip unit catalog number information is also located on pages 47.

Add Trip Unit to Breaker Frame

A. Remove terminal screws **(1)** and terminal shield **(2)** from load side of breaker frame.

B. Remove cover attachment screws **(3)** and access cover **(4)**. **NOTE: If breaker frame is mounted, load-end breaker mounting screws must also be removed before cover can be removed.**

C. Remove operating handle **(5)**.

D. Lower trip unit assembly **(6)** into base. Make sure trip unit latch pin engages slots in mechanism frame.

E. Tighten three trip unit captive screws **(7)**. (Recommended torque 140 in-lbs.)

F. Add the load lugs and fasten per instructions furnished with connector kits.

G. Apply rating label **(8)** supplied with trip unit, to recessed area on top of operating handle **(3)**. **NOTE: Make sure rating label agrees with amperage rating of trip unit installed.**

H. Replace operating handle **(5)**. Operating handle must be installed with word ON toward trip unit. **NOTE: Make sure operating handle is seated squarely on metal handle arm.**

I. Replace access cover **(4)** and cover attachment screws **(3)**. (Recommended torque A 18-20 in-lbs., B 30-32 in-lbs.) Replace terminal shield **(2)** and terminal screws **(1)**. Replace load-side breaker mounting screws if applicable.

J. Move operating handle **(5)** to extreme OFF position (reset).

Replace Trip Unit in Breaker Frame

Caution: Circuit breaker must be in the TRIPPED position and breaker terminals must be disengaged from any source of power before removing cover.

A. Remove terminal screws **(1)** and terminal shield **(2)** from load side of breaker frame.

B. Remove cover attachment screws **(3)** and cover **(4)**. **NOTE: If circuit breaker is mounted, load-end breaker mounting screws must also be removed before cover can be removed.**

C. Remove operating handle **(5)**.

D. Remove three trip unit attachment screws **(7)**. **NOTE: Attachment screws will remain captive to trip unit assembly.**

E. Remove load-end cable connector mounting screws and connectors if applicable.

F. Lift trip unit assembly **(6)** from circuit breaker.

G. Add new trip unit as outlined under Steps D to J of "Add Trip Unit to Breaker Frame" instructions.

IPS
store.ips.us

Installation Diagram

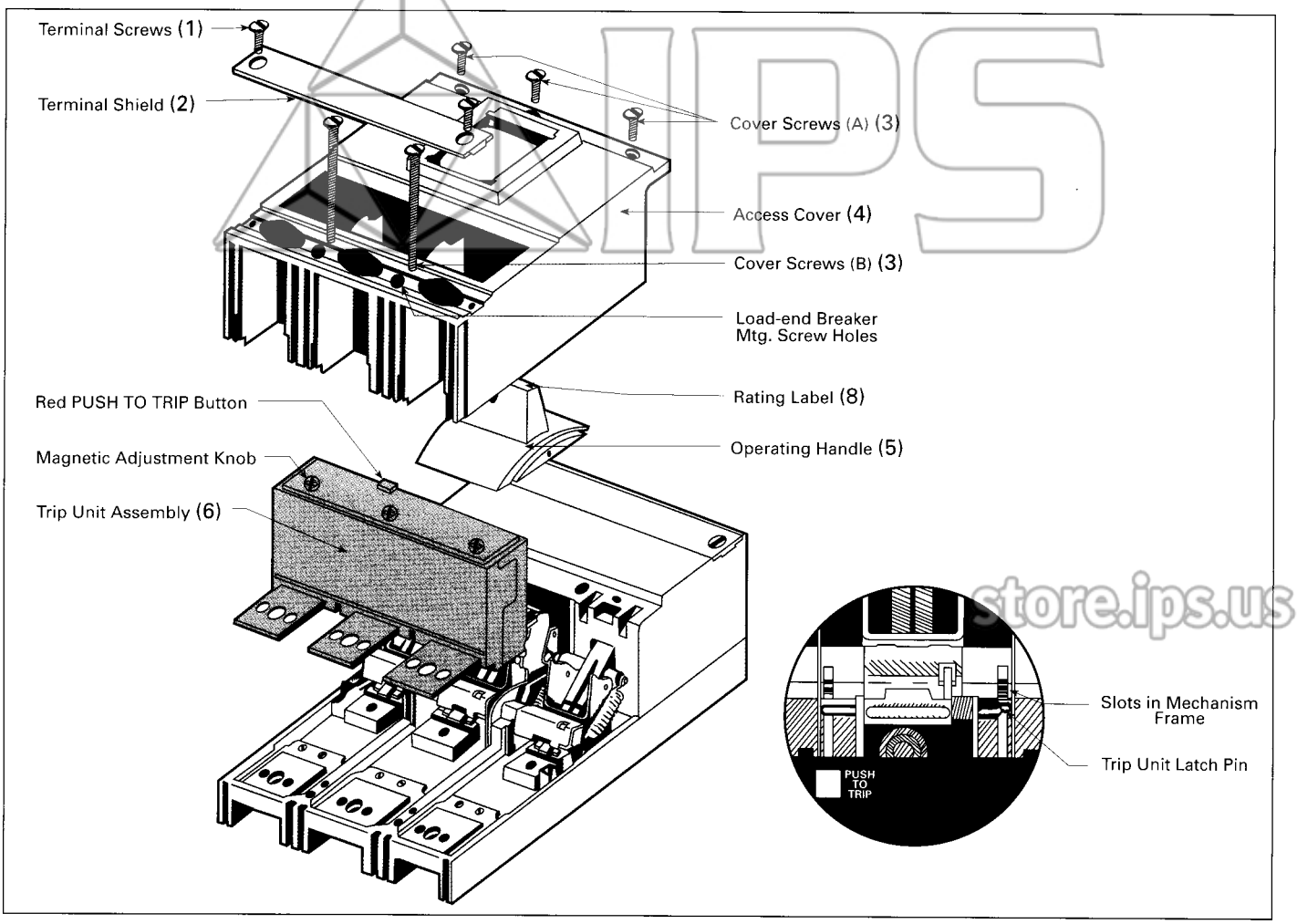

Figure 1

store.ips.us

Rear Connecting Studs

⚠ DANGER

Hazardous Voltage.
Will cause death or severe injury.

Turn power off supplying switchboard or panel before installing.

⚠ Safety Instructions

General Description

One complete rear stud assembly requires the following:
1 1-12 threaded stud
1 Molded stand-off insulator
1 Insulator bushing
1 Insulator (req'd for metallic mtg. panels only)
1 "T" Connector
2 Brass locknuts
1 5/16-18 x 1" mtg. bolt
1 5/16" Belleville washer

Application Information

Ampere Rating	Poles	Quantity Per Breaker
400	2	4 of RS-5774
	3	4 of RS-5774 plus 2 of RS-5773
600	2	4 of RS-5784
	3	4 of RS-5784 plus 2 RS-5783

Mounting Preparation (Figure 1)

A. Drilling locations are shown in Figure 1. The 5/8" wide cutout between holes is required when mounting the breaker with stud assemblies to a metallic panel.

Breaker Preparation (Figure 2)

A. Remove wire connectors from breaker if present.

B. Attach long and short studs **(1)**, **(2)** to circuit breaker for three poles devices, short studs **(1)** only for two pole devices. Attach with the 5/16-18 x 1" hex head bolt and the 5/16" serrated cone lockwasher **(4)**. Tighten finger tight only.

C. Slide one stand-off insulator **(5)** onto each stud until the stand-off insulator fully covers the square end of the studs. Tighten hex head bolt **(3)** to 132 in-lbs. and install insulator **(10)** over studs only if using a metallic mounting panel.

Final Assembly (Figure 3)

A. Install circuit breaker so that all studs extend through mounting panel and the stand-off insulators **(5)** are seated against the mounting panel.

B. Install insulator bushings **(6** and **7)** over studs where required and tighten them securely in place against the mounting panel with the locknut **(8)**.

C. Thread the second locknut **(8)** and the "T" connector (9) over the studs as far as possible where required. Position "T" connector as desired by loosening (one full turn max.) and lock in place with the second locknut at 132 in-lbs.

Important User Note

Assemblies are designed with adequate 600 volt electrical clearance between components. User installation must maintain these clearances through spacing or proper insulation.

A. Insert the upper end shields **(11)** into the slots provided at the line and load ends of the breaker (Figure 2), one for each stud position.

B. Affix the label Pc. No. 60229 to breaker cover (Figure 2).

C. Make desired bus bar connections with 5/16" bolts and washer to "T" connectors. (See Figure 3 for hole pattern of "T" connector).

Installation Diagrams

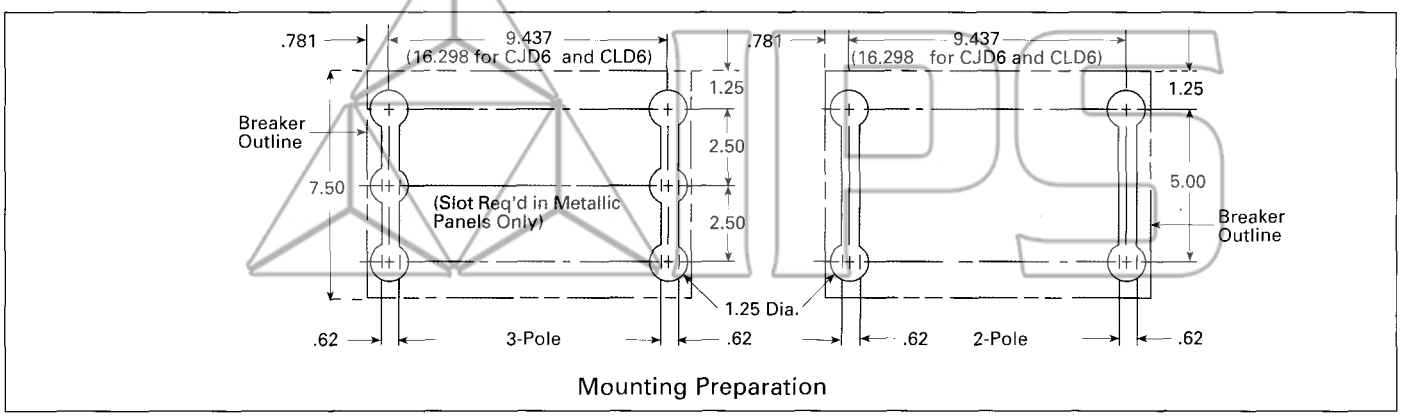

Mounting Preparation

Figure 1

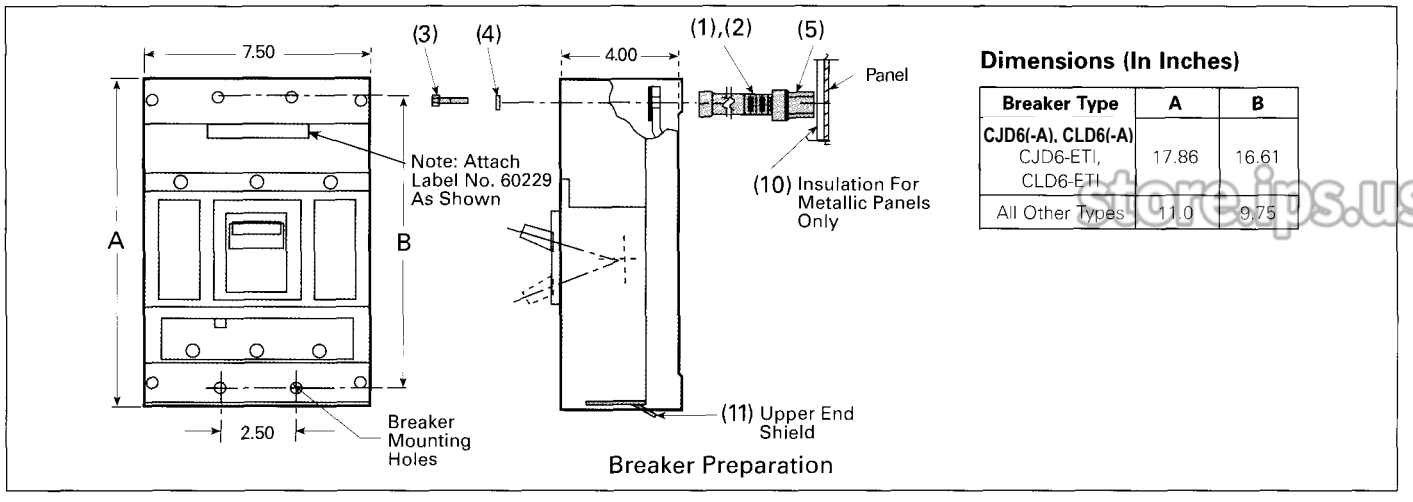

Breaker Preparation

Dimensions (In Inches)

Breaker Type	A	B
CJD6(-A), CLD6(-A) CJD6-ETI, CLD6-ETI	17.86	16.61
All Other Types	11.0	9.75

store.ips.us

Figure 2

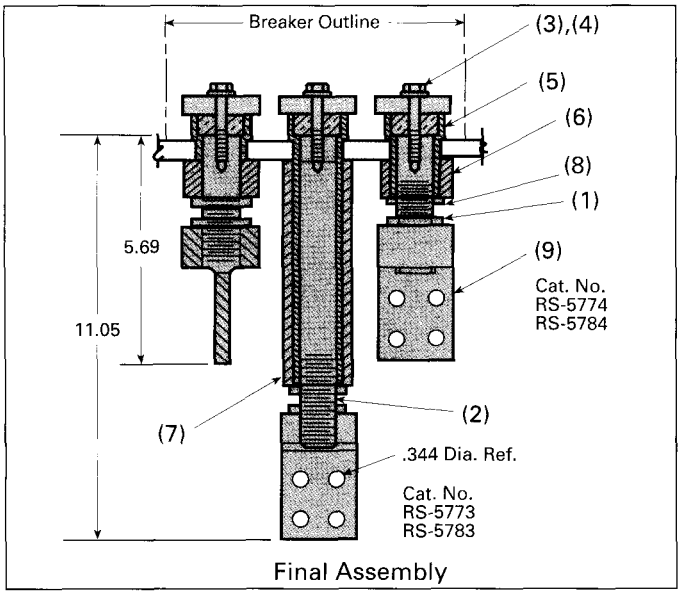

Final Assembly

Figure 3

Plug-In Adapters

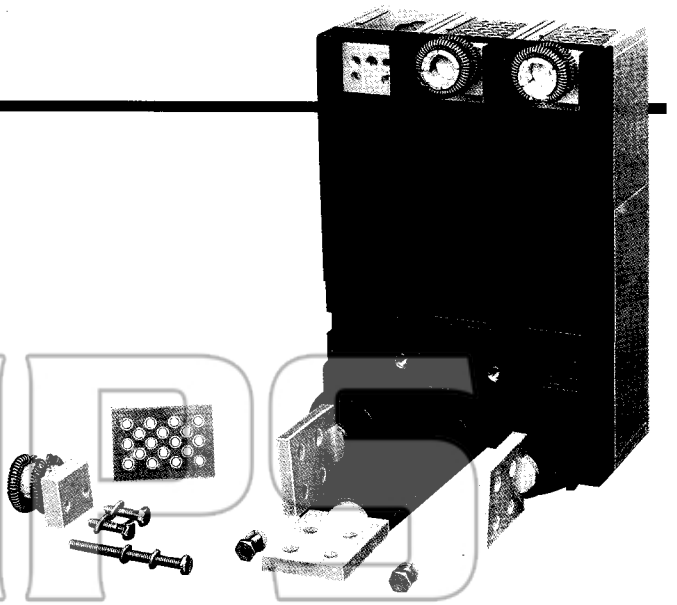

⚠ DANGER

Hazardous Voltage.
Will cause death or severe injury.

Turn power off supplying switchboard or panel before installing.

⚠ Safety Instructions

General

A complete plug-in installation requires one line end adapter assembly (consisting of a mounting block, tulip connectors and associated hardware), one load end adapter assembly and one switchboard mounting plate. The switchboard mounting plate is optional and can be replaced by other mounting means to suit customer's requirements.

Application Information

Breaker Type	No. of Poles	Line End Adapter Cat. No.	Load End Adapter Cat. No.	Switchboard Mtg. Plate Cat. No.
JXD2(-A), JXD6,(-A), HHJD6, HHJXD6, JD6(-A), HJD6(-A), HJXD6(-A)	2 3	PC5777 PC5778	PC5777 PC5778	PL5796 PL5796
LXD6(-A), LD6(-A), HLD6(-A), HLXD6(-A), HHLXD6, HHLD6	2 3	PC5660 PC5661	PC5660 PC5661	PL5796 PL5796
CJD6(-A), CJD6-ETI	2 3	PC5777 PC5778	PC5777 PC5778	PL5797 PL5797
CLD6(-A), CLD6-ETI	2 3	PC5660 PC5661	PC5660 PC5661	PL5797 PL5797

Mounting Preparation (Figures 1 and 2)

A. If the switchboard mounting plate (PL5796, PL5297) **(1)** is to be used, provide drilling as shown in Figure 1.

B. If other mounting means are to be used, provide the cutouts and drilling required to mount the adapter blocks as shown in Figure 2.

Switchboard Mounting Plate, if used (Figure 3)

A. Place switchboard mounting plate **(1)** in position at location previously prepared in Step A above. Secure in place with 5/16". Lockwashers **(3)** and 5/16" bolts **(4)** furnished.

Mounting Block (Figure 3)

A. Align mounting block **(2)** with cutouts in switchboard mounting plate (or customer's mounting means as previously prepared in Step B above) and secure in place with 5/16" lockwashers **(3)** and 5/16" bolts **(4)** furnished.

Breaker Preparation (Figure 4)

A. Remove pressure wire connectors from breaker if present. Place tulip clip assembly **(5)** on back of breaker in recess provided in base molding. Secure in place with 1/4" belleville washers **(6)** and 1/4"-20 x 1 hex head bolts **(7)** furnished. Recommended tightening torque for these bolts is 5-6 ft.-lbs. to assure a good electrical connection. Repeat this procedure for the remaining tulip clip assemblies.

B. Insert line end shields **(8)** into slots provided at line and load end of breaker. No lower end shields are required.

C. Affix accessory warning labels **(9)** to top of breaker as indicated in Figure 5.

Final Assembly (Figure 6)

A. Make bus connections to flat bar connectors at rear of mounting blocks with customer supplied 5/16" hardware (see Figure 6 for hole pattern).

Caution: Make certain that breaker operating handle is in the OFF position before proceeding with the next step.

B. Align breaker with mounting blocks and force female tulip clips over male studs in mounting blocks until breaker base bottoms against mounting block. Secure breaker in place with 1/4-20 x 3" mounting screws **(10)**, lockwashers **(11)** and flatwashers **(12)** furnished.

C. If installation requires use of front panel trim, provide cutout for breaker escutcheon (Figure 7).

Installation Diagrams

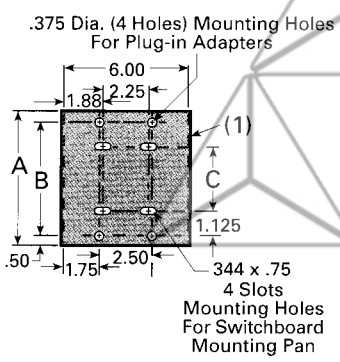

Drilling Switchboard Mounting Plate

Figure 1

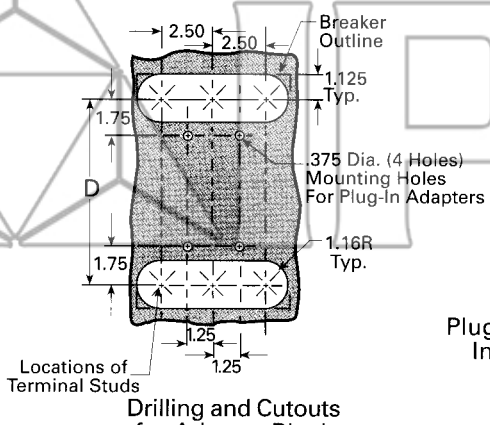

Drilling and Cutouts for Adapter Block

Figure 2

Dimensions (In Inches)

Breaker Type	A	B	C	D
CJD6(-A), CLD6(-A) CJD6-ETI, CLD6-ETI	13.11	12.11	9.86	15.61
All Other Types	6.25	5.25	3.00	8.75

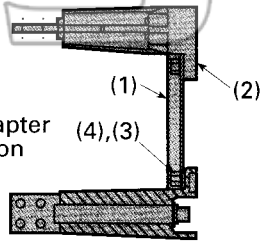

Plug-In Adapter Installation

Figure 3

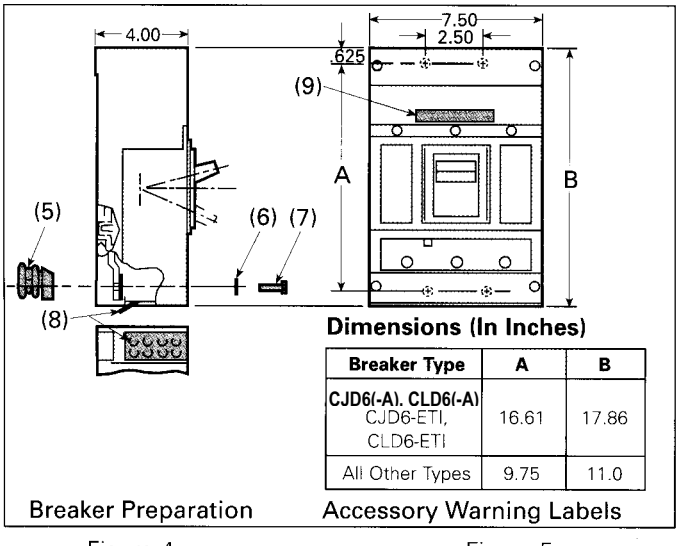

Breaker Preparation

Figure 4

Dimensions (In Inches)

Breaker Type	A	B
CJD6(-A), CLD6(-A) CJD6-ETI, CLD6-ETI	16.61	17.86
All Other Types	9.75	11.0

Accessory Warning Labels

Figure 5

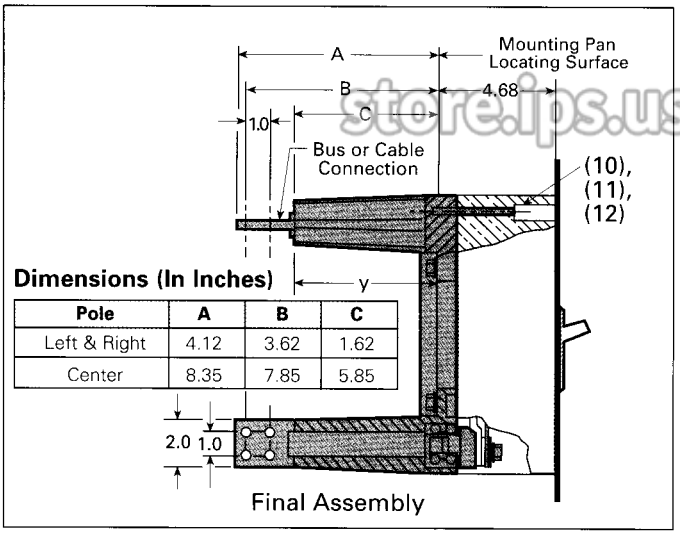

Dimensions (In Inches)

Pole	A	B	C
Left & Right	4.12	3.62	1.62
Center	8.35	7.85	5.85

Final Assembly

Figure 6

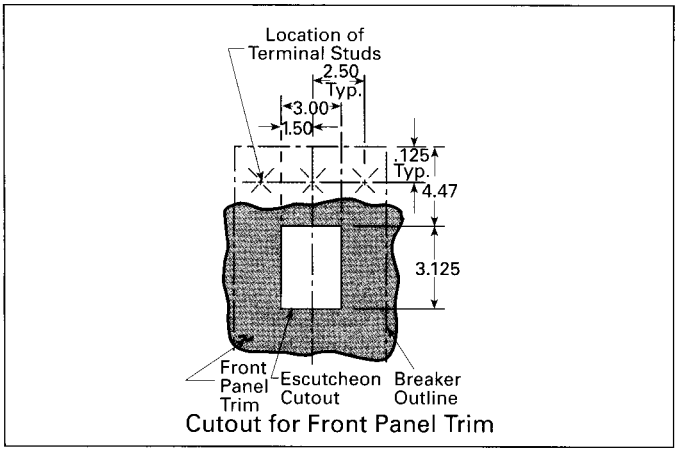

Cutout for Front Panel Trim

Figure 7

store.ips.us

Walking Beam Type Interlock

Panel Mounted Circuit Breakers (MI5413)

⚠ DANGER

Hazardous Voltage.
Will cause death or severe injury.

Turn power off supplying switchboard or panel before installing.

⚠ Safety Instructions

Circuit Breaker Preparation (Figure 1)
NOTE: The term circuit breaker, as used in these instructions, includes motor circuit interrupters and molded case switches.

A. Turn OFF and lock out all power supplying circuit breaker or frame before removing cover and while cover is removed.

B. Remove terminal shied **(1)** from load side of breaker frame. Two #8-32 x 3/8 screws.

NOTE: All dimensions are in inches.

C. Remove load cover from breaker frame. Three #8-32 x 3/8 screws and two #10-32 x 2-1/4 screws.

Installing the Trip Unit (Figure 1)

A. Remove from the *right pole only* of the trip unit, the socket head cap screw and the belleville spring washer, and discard.

B. Lower the trip unit into place as shown in Figure 1. The latch pin on the trip unit must seat into frame slots on both sides. The circuit breaker handle may be removed to ease assembly.

C. Secure trip unit to frame. Tighten the two 5/16-18 socket head cap screws on left and center poles to 140 in-lbs.

Installation of Mechanical Interlock (Figure 2)
NOTE: Installation of the Mechanical Interlock prevents use of internal accessories in the right pole of the circuit breakers.

Caution: If the Mechanical Interlock is not installed per these instructions, personal injury could result.

A. Press both contacts downward to CLOSE circuit breaker. Insert wide end of plastic safety block into the line cover slot on the left pole, as shown in photo. This secures the contact in the CLOSED position.

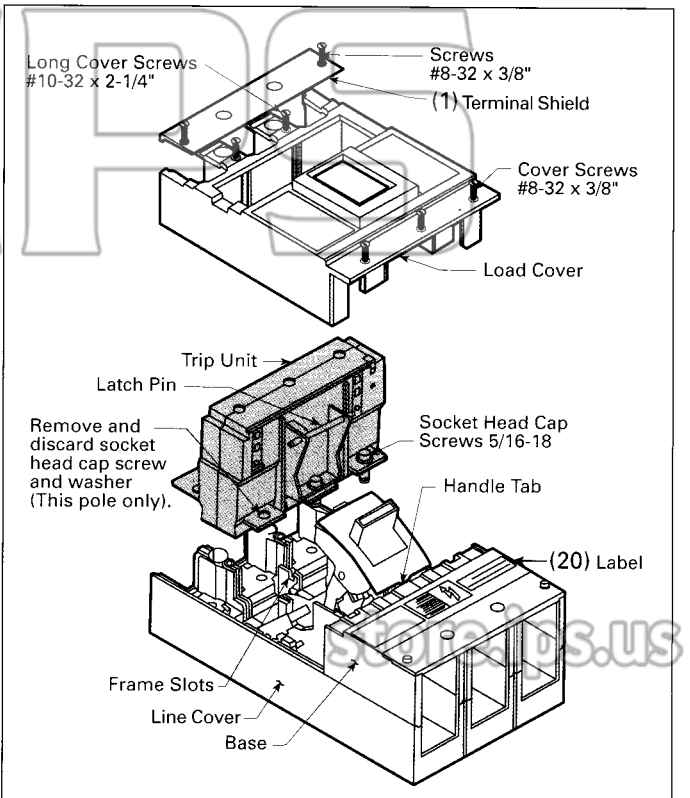

Installing Trip Unit

Figure 1

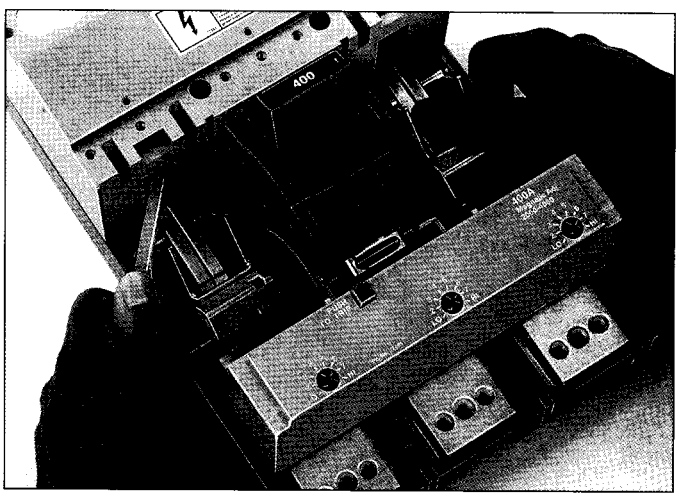

Restraining circuit breaker contacts by using safety block.

NOTE: For circuit breaker types HHJD6, CJD6, HHLD6 and CLD6, insert narrow end of safety block into the slot.

Caution: Slowly release the contacts and confirm that the contacts are held in the CLOSED position.

B. Attach the clamp assembly and plunger. See Figure 2 and photo illustrations.

1. Screw the captive socket head cap screw **(1)** into the support threads **(2)** until it is flush with bottom of clamp assembly, as shown in Figure 2.
2. Hold clamp assembly at an angle, with front edge of clamp **(3)** over the right hand corner of the cam. Slide the clamp downward to align with the tie-bar, and rotate the clamp assembly over the tie-bar. Slide the clamp assembly approx. 1/2" to the left.
3. Insert the plunger **(4)** into the access hole in the base of the circuit breaker.
4. Slide the clamp assembly to the right, and insert the pin **(5)** into the plunger hole.
5. Secure the assembly in place using the cap screw **(1)**. Tighten to 140 in-lbs.

C. Press the contacts downward and carefully remove the safety block.

Caution: Release the contacts carefully to prevent personal injury.

D. Replace the circuit breaker handle if removed. Be sure tab on front of handle is toward the line end.

E. Replace the load cover and secure it in place with three #8-32 screws on the line end, and two #10-32 screws on the load end. Tighten to 25 in-lbs.

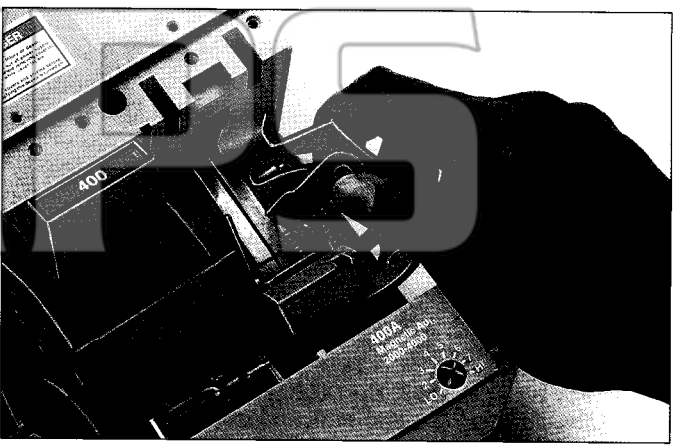

Position Clamp Assembly at an angle.

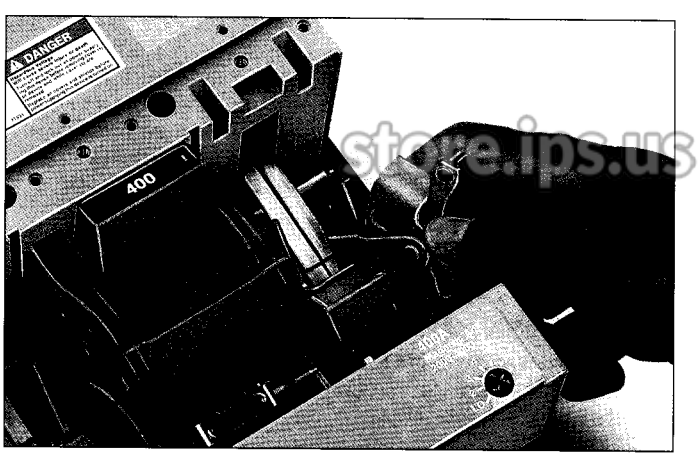

Rotate Clamp Assembly over tie bar.

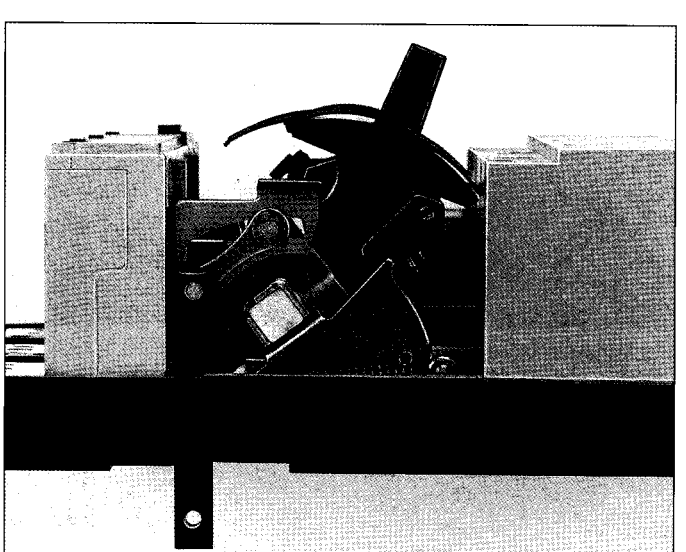

Side view of installed Mechanical Interlock.

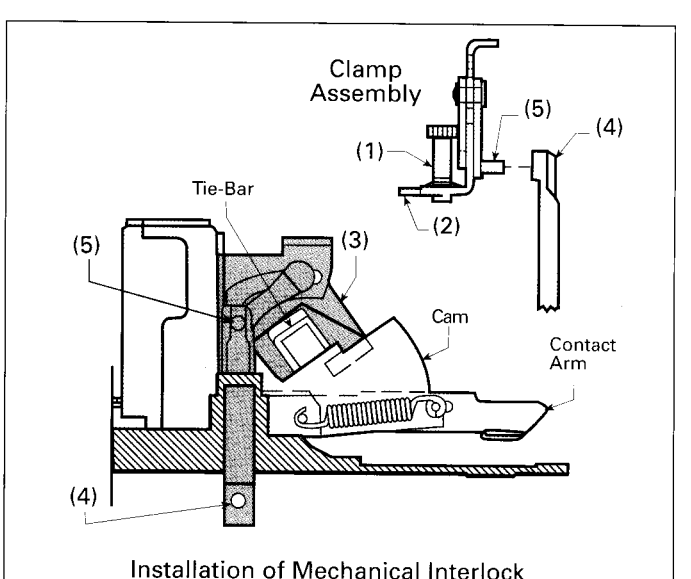

Installation of Mechanical Interlock

Figure 2

Walking Beam Type Interlock

Panel Mounted Circuit Breakers (MI5413)

Mounting the Circuit Breaker (Figures 3 and 4)
A. Drill holes in mounting panel as shown in Figure 3.

NOTE: The circuit breakers and the bracket are mounted on one single 0.135" thick (10 GA) steel panel. A cross-brace is recommended to prevent flexing of the mounting panel.

Caution: Malfunction of the Mechanical Interlock could occur if the dimensions shown in Figure 3 are not maintained. This could result in equipment damage.

B. Attach the bracket **(6)** to the rear of the mounting panel using two #10-32 x 1/2 flathead screws **(7)**, lockwashers **(8)** and nuts **(9)**.

NOTE: For types HHJD6, HHJXD6, CJD6, HHLD6, HHLXD6 and CLD6, add two 0.104 in. thick rectangular shims (10) between the bracket and mounting panel. Attach using #10-32 x 3/4" screws. Secure with lockwashers (8) and nuts (9). Tighten nuts to 32 in-lbs.

C. To mount circuit breakers, position over the 1.00" diameter hole, being careful to prevent damage to the protruding plunger. Use Cat. No. MSJ6 mounting screw kit to fasten circuit breakers to the mounting panel. Tighten the 1/4-20 mounting screws to 75 in-lbs. Replace the terminal shields and tighten the two #8-32 screws to 25 in-lbs.

Rocker Arm Assembly (Figure 4)
A. Attach plunger connectors **(11)** to end of plungers **(4)** using 0.188 x 0.74 pins **(12)**. Insert cotter pin **(13)** into hole of pin **(12)** and spread ends.

B. Attach rocker arms **(14)** to bracket **(6)** using 0.188 x 1.38 pin **(15)**. Insert cotter pin **(13)** into hole of pin **(15)** and spread ends.

C. Attach rocker arms **(14)** to plunger connectors **(11)** using 0.188 x 1.09 pins **(16)**. Insert cotter pin **(13)** into hole of pin **(16)** and spread ends.

D. Attach springs **(17)** to the bracket **(6)** and secure to rocker arm **(14)** using spring adapters **(18)** and 1/8 x 1-1/2 cotter pins **(19)** and spread ends.

E. Peel oft protective backing from adhesive labels **(20)** and attach labels to front of each circuit breaker as shown in Figure 1.

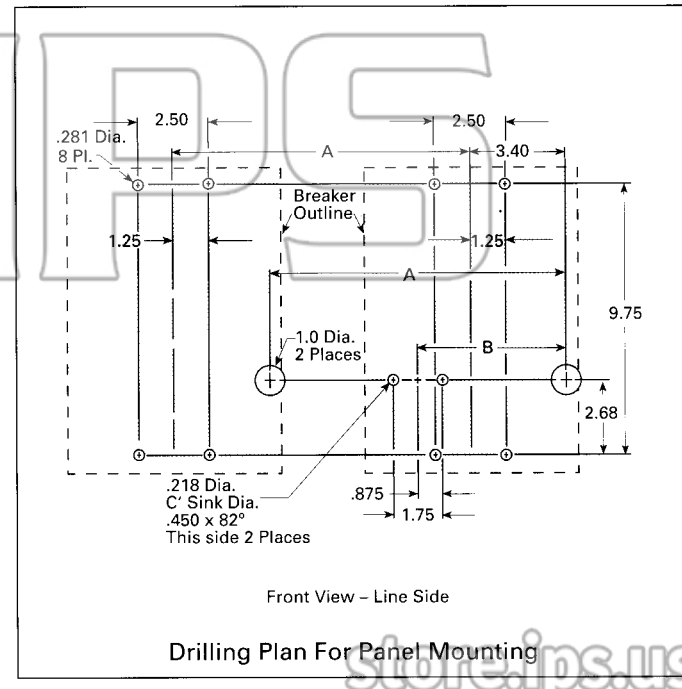

Figure 3

	A	B
7.5" Center	7.50	3.75
10.5" Center	10.50	5.25

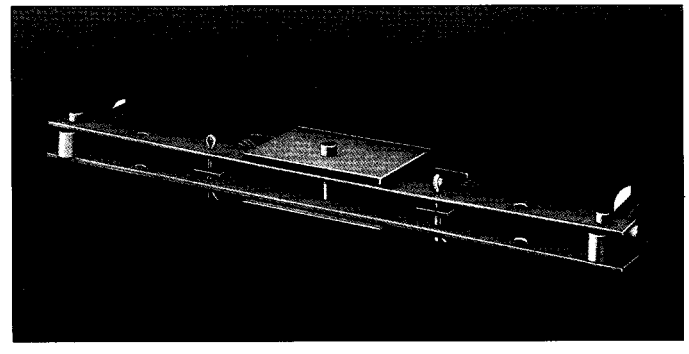

Rocker Arm Assembly

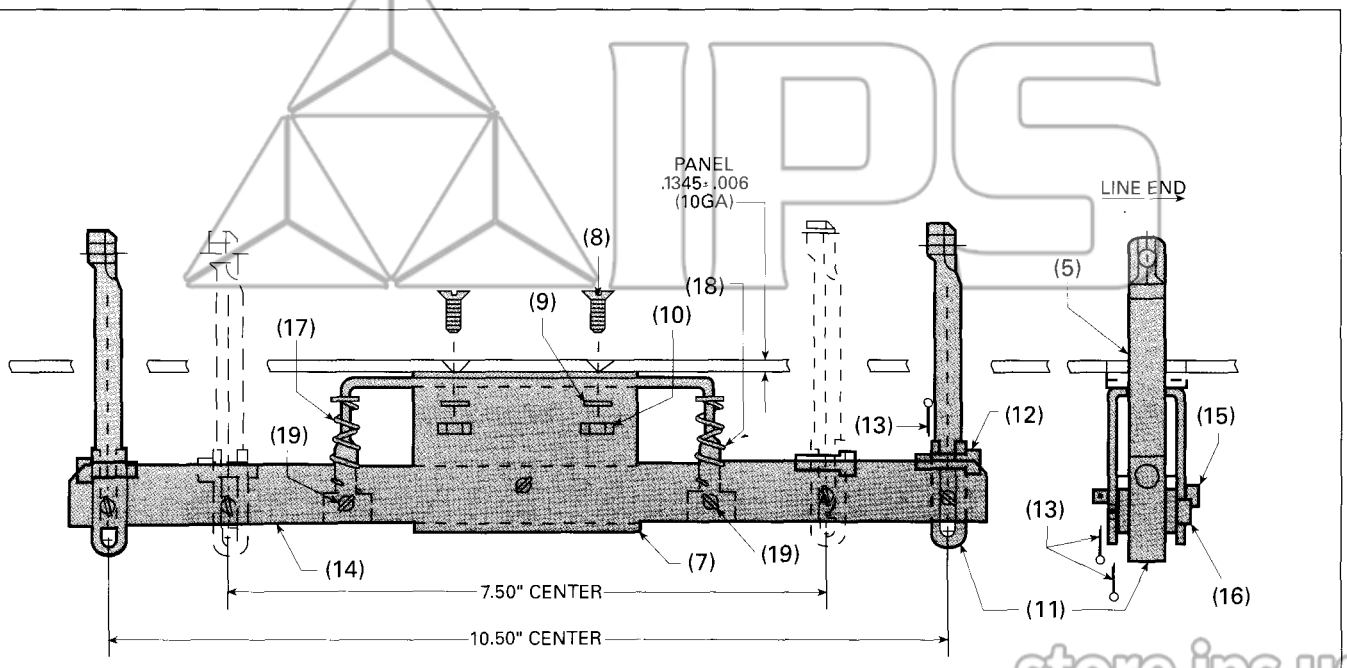

Rocker Arm Assembly

Figure 4

Check Operation

A. Check ON-OFF functions of each circuit breaker. Confirm that each circuit breaker cannot be turned ON if the other circuit breaker is ON.

B. The Interlock Mechanism will prevent closing of one or both of the circuit breakers if they are simultaneously driven to the ON position. Check this function by manually synchronizing TURN ON of both circuit breaker handles.

Caution: Avoid unnecessary simultaneous TURN ON operations. They cause high mechanical loading of the circuit breaker and interlock components.

NOTE: If both circuit breakers can be turned ON simultaneously, check for flexing of the mounting panel.

store.ips.us

JD-Frame Time Current Curve

Types JXD2(-A), JD6(-A), JXD6(-A), HJD6(-A), HJXD6(-A), HHJD6, HHJXD6

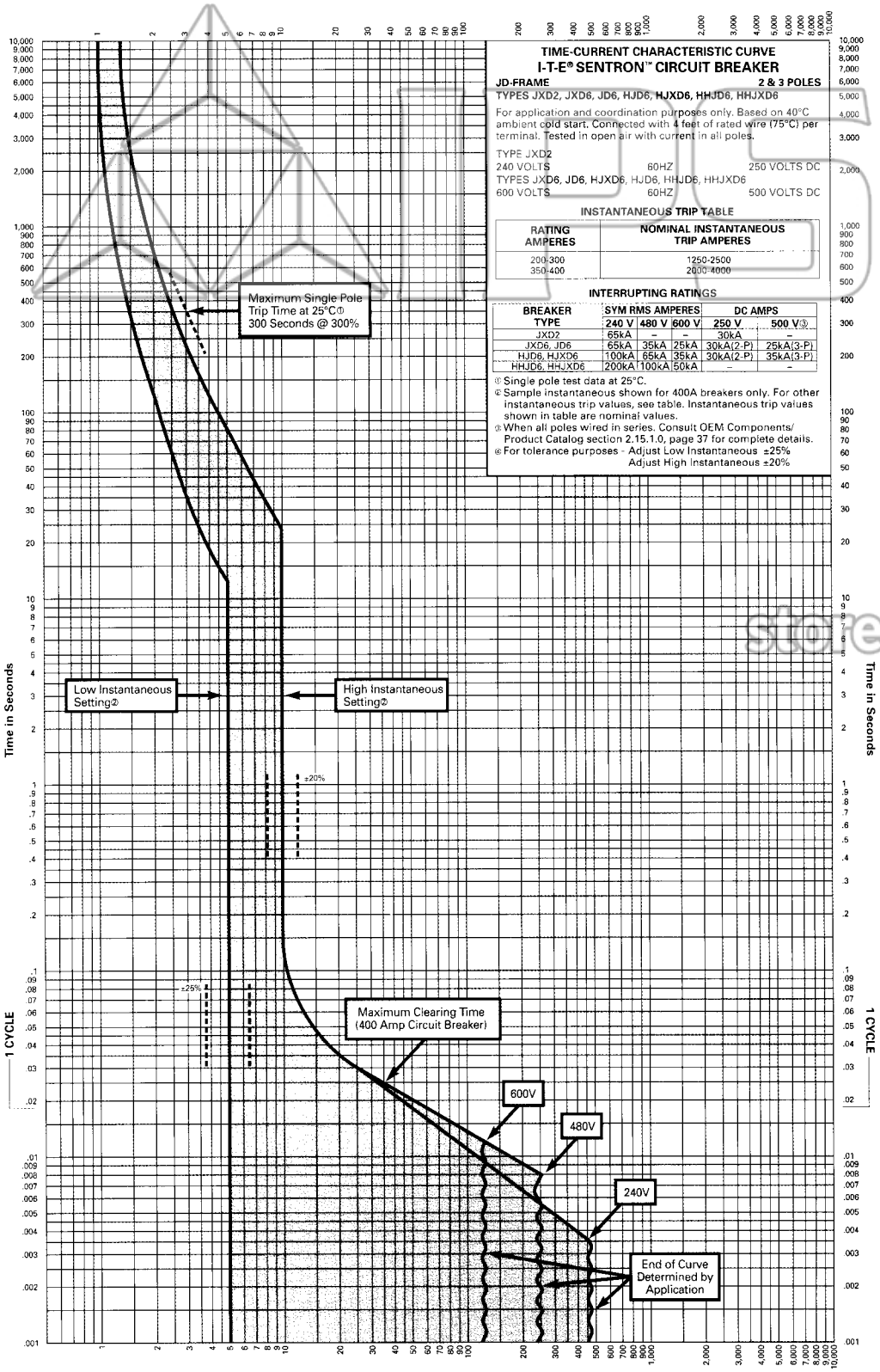

TD-7104

Courtesy of store.ips.us

LD-Frame Time Current Curve

Types LXD6(-A), LD6(-A), HLXD6(-A), HLD6(-A), HHLD6, HHLXD6

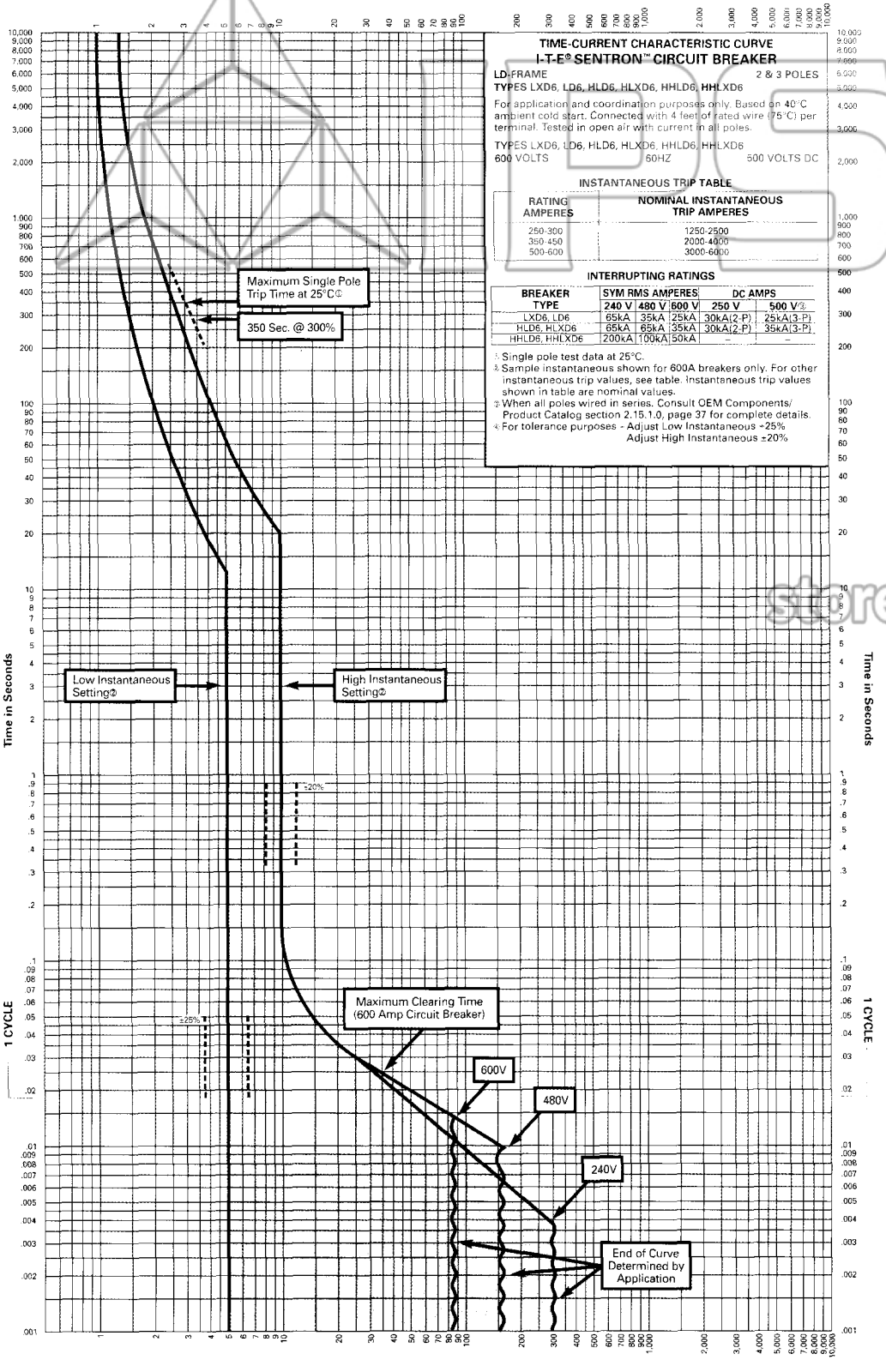

TD-7106

store.ips.us

JD-Frame Time Current Curve

TYPE CJD6(-A)

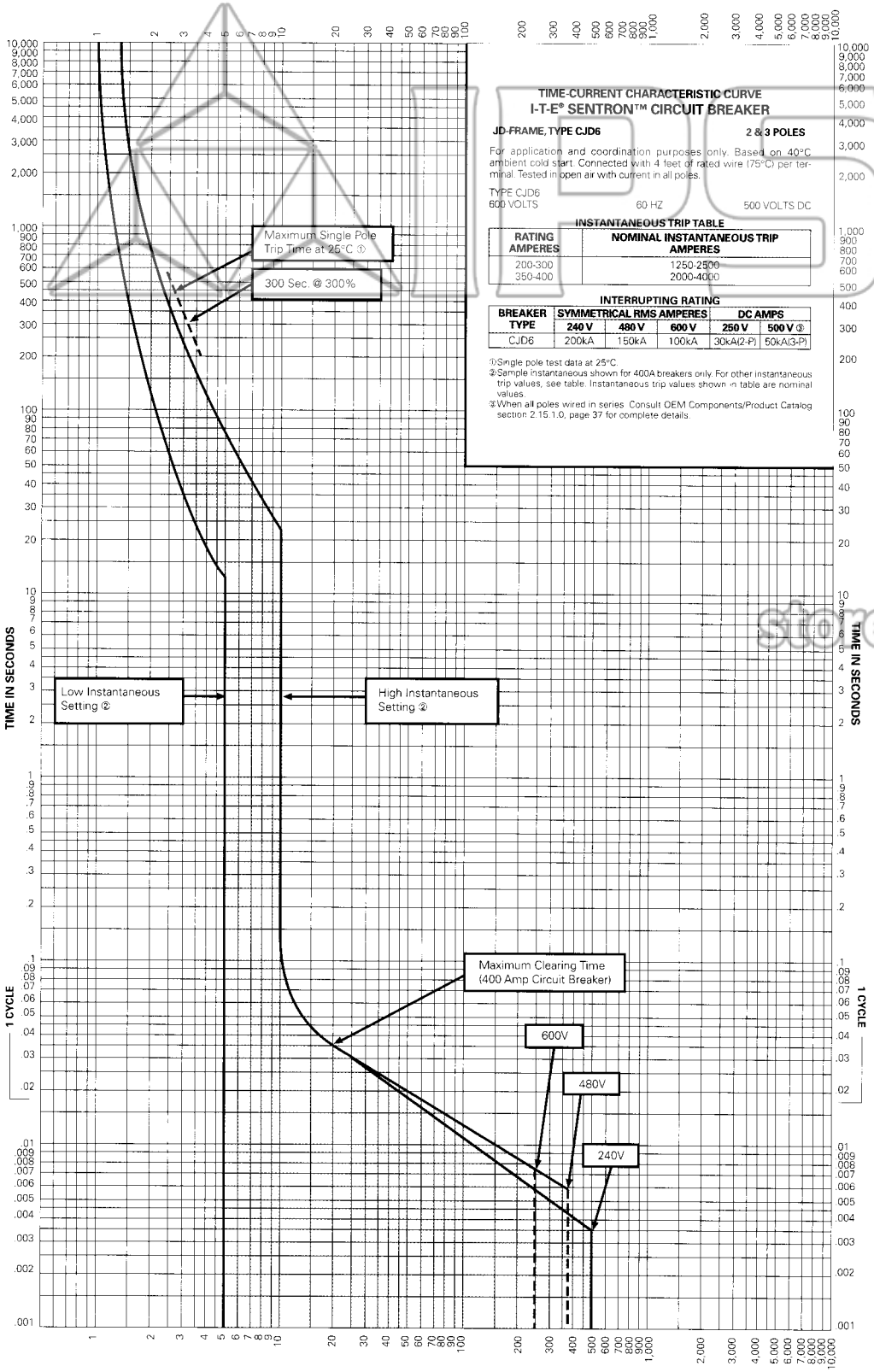

TD-7105

Courtesy of store.ips.us

LD-Frame Time Current Curve

TYPE CLD6(-A)

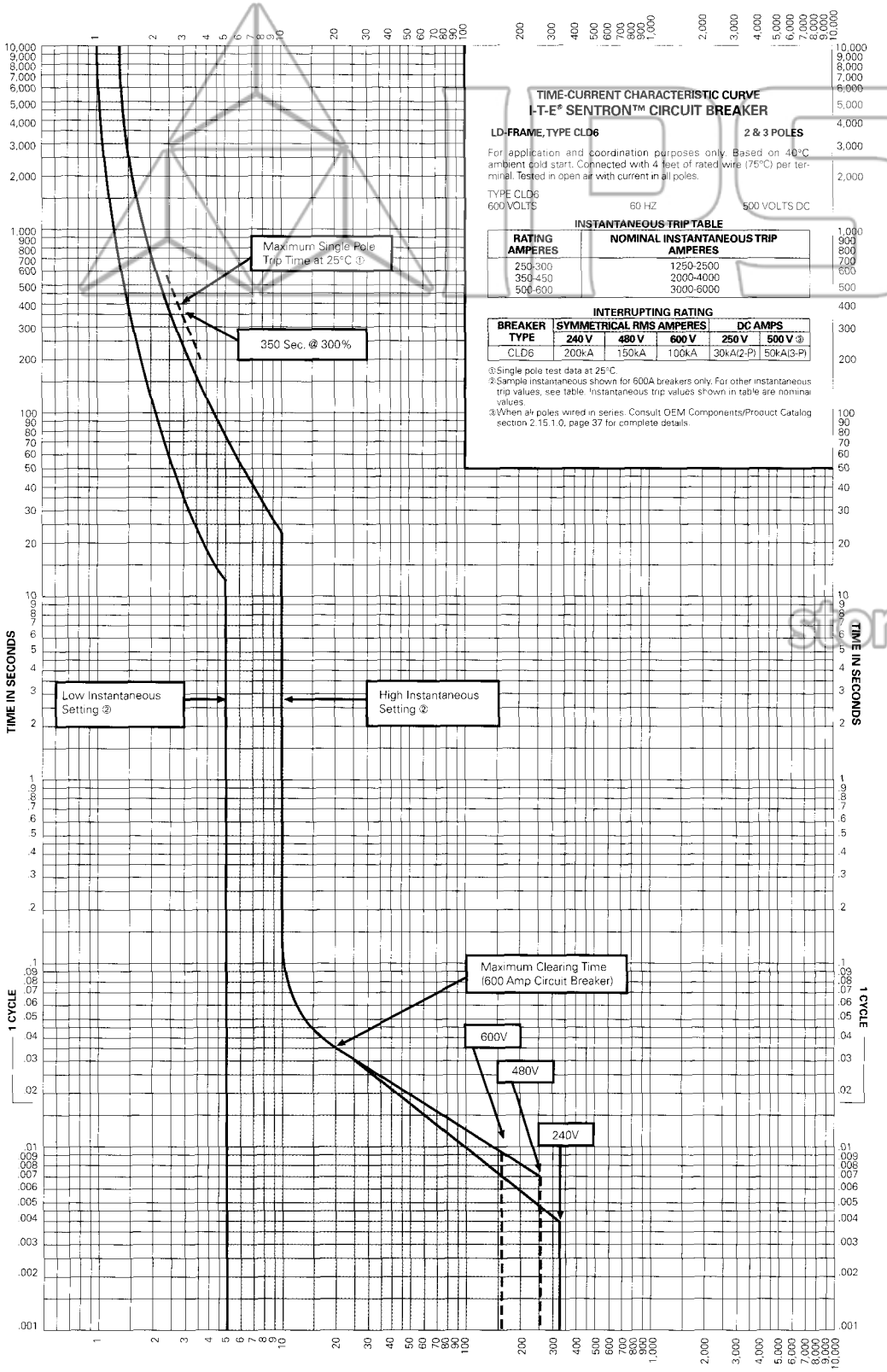

TD-7107

store.ips.us

JD and LD-Frame Peak Let-Thru Current (I_p) Curves

Type CJD6(-A), CLD6(-A)

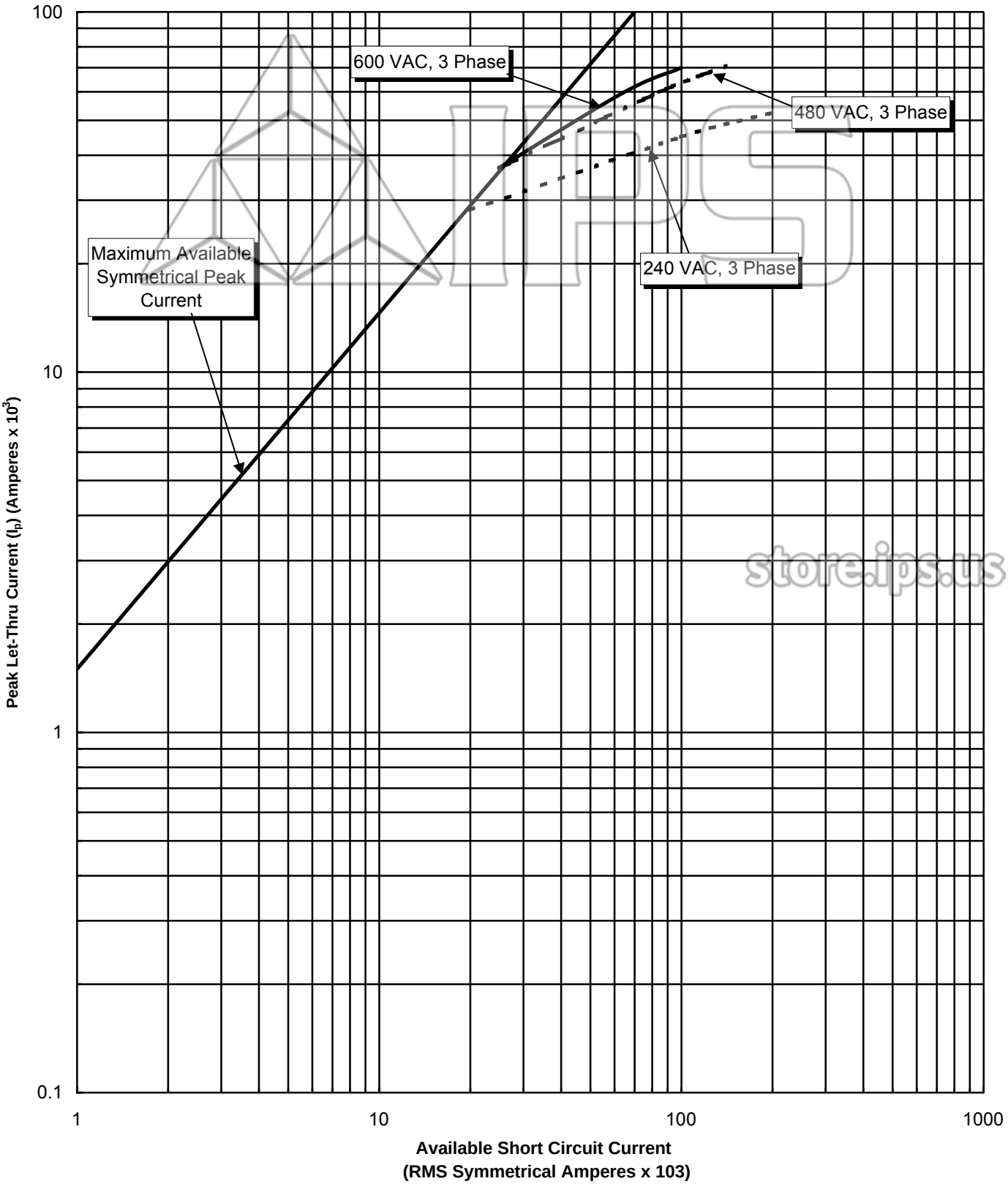

store.ips.us

Courtesy of store.ips.us

JD and LD-Frame Let-Thru I^2t Curve

Types CJD6(-A), CLD6(-A)

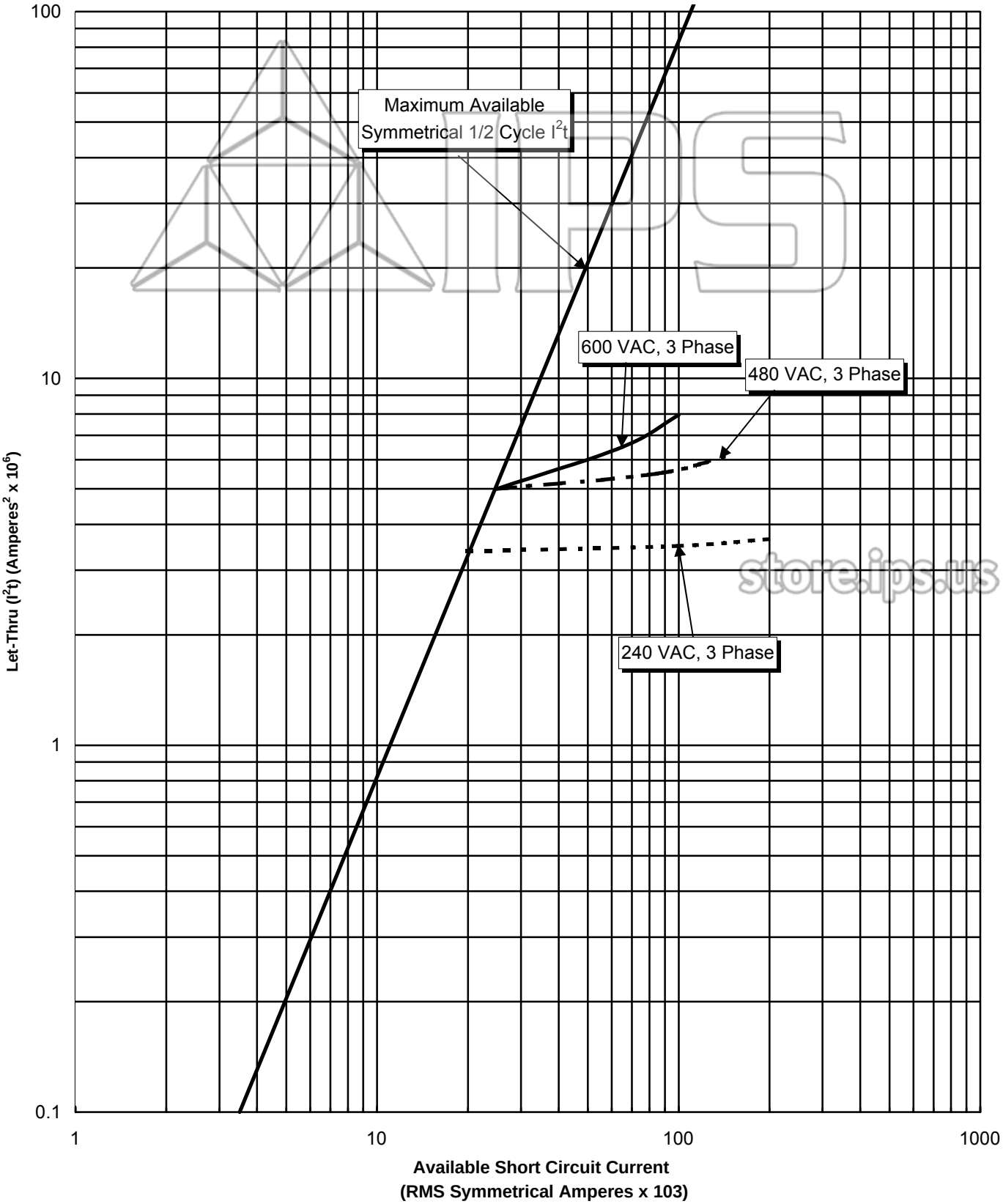

TD-7105-B-Rev.2 (CJD6-A)
TD-7107-B-Rev.2 (CLD6-A)

Courtesy of store.ips.us

⚠ DANGER

Hazardous Voltage.
Will cause death or severe injury.

Turn power off supplying switchboard or panel before installing.

⚠ Safety Instructions

Circuit Breaker Preparation

A. Depress trip button (Figure 1) to trip circuit breaker prior to removing cover. Before attaching accessory unit, circuit breaker must be in tripped position.

B. Remove two terminal shield screws on load end cover **(1)**, load end cover screws (5 or 9) **(2)** and, if breaker is mounted, also remove mounting screws (not shown). Remove load end cover only **(3)**. Accessory units can be mounted in either right or left poles of the circuit breaker, except types with an "FP" prefix or an "S" suffix, which can only be mounted in the right pole.

Accessory Mounting Instructions

A. Feed accessory leads down and through 5/16 x 1/2" elongated opening **(4)** to bring leads out of bottom of circuit breaker (Figure 3). **NOTE: Leads must be brought out in the same order as they exit wire retainer of accessory case.**

B. Accessory is located in circuit breaker by groove **(5)**, bottom side of accessory. Remove protective label from top of trip unit and guide actuator **(9)** into opening **(10)**.

NOTE: On shunt trip, undervoltage trip and auxiliary switch accessories, transfer link is in top opening and transfer link slides into top opening of trip unit. Transfer link is in bottom opening of Bell Alarm switch and slides into bottom opening of the trip unit.

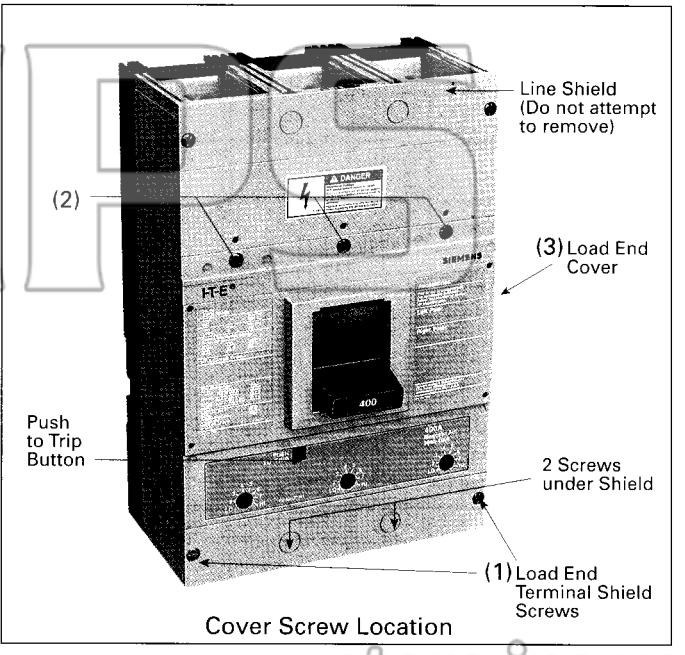

Figure 1

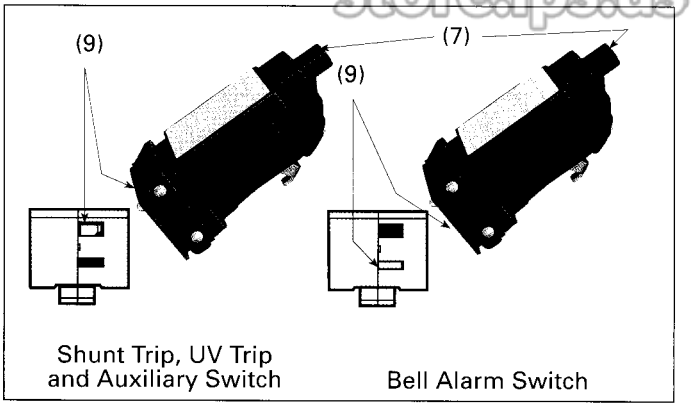

Figure 2

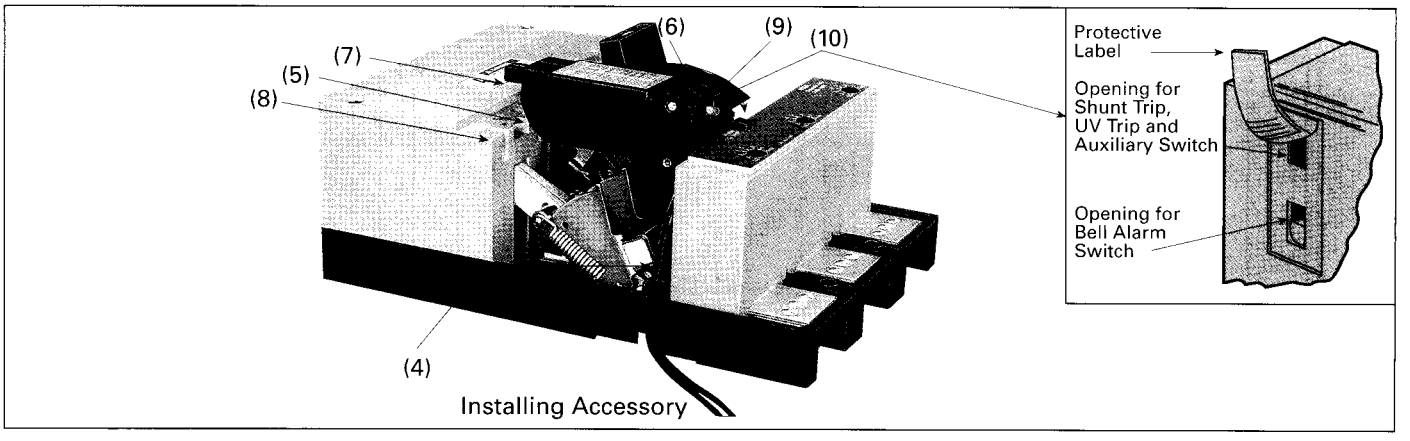

Figure 3

Courtesy of store.ips.us

Recommended Combinations

C. Slide accessory down to reset on pad **(6)** trip unit. When accessory is installed correctly, front of accessory **(7)** will rest on pad **(8)** of line cover. Pull gently and evenly on accessory wire leads (2 to 6 wires) while lowering accessory into base. Make sure *all the slack* is removed from leads inside breaker.

D. Replace load end cover **(3)** cover screws **(2)** and four mounting screws if mounted. Replace terminal shield with screws **(1)**.

E. Add two labels to circuit breaker. Attach identification label **(11)** to appropriate space in label on top of circuit breaker on right hand side. Attach accessory information label **(12)** on side of circuit breaker base (Figure 5).

F. Refer to Electrical Check, page 22 and 23.

Maximum Installable Accessory Combinations ②

Shunt Trip①	Undervoltage Trip	Auxiliary Switch	Bell Alarm Switch
1	1	3	0
1	0	3	0
1	0	3	1
0	1	4	0
0	1	4	1
0	0	4	1
0	0	4	0

① Shunt trip units include a coil clearing switch.

② When mechanical interlock M15413 is employed accessories are limited to left pole only.

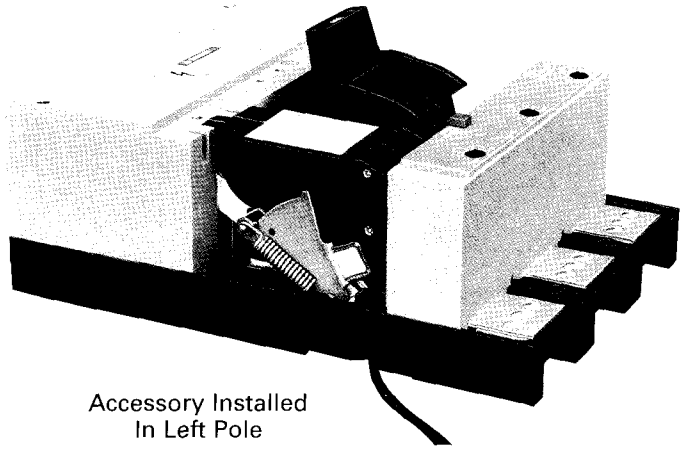

Accessory Installed
In Left Pole

Figure 4

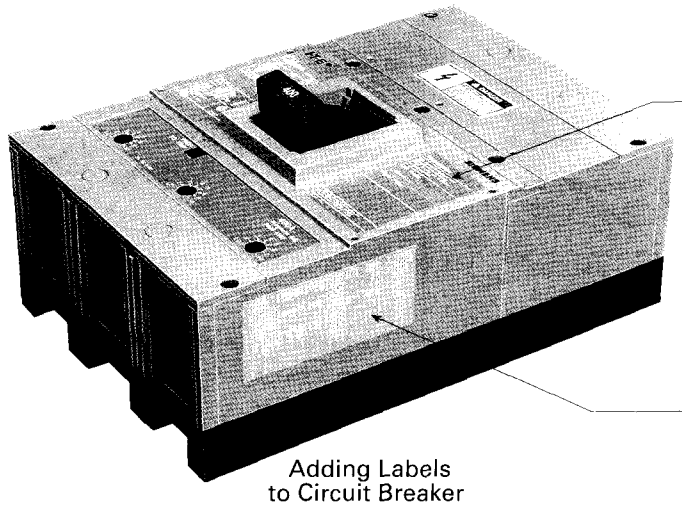

Adding Labels
to Circuit Breaker

Figure 5

store.ips.us

Shunt Trip and Undervoltage Trip

Electrical Check

Shunt Trip

A. Reset and turn circuit breaker ON.

B. Attach test circuit to accessory leads. When the test voltage reaches 55 percent or more of the rated coil voltage, the circuit breaker should trip.

C. With breaker TRIPPED or OFF, check to make sure coil circuit has opened.

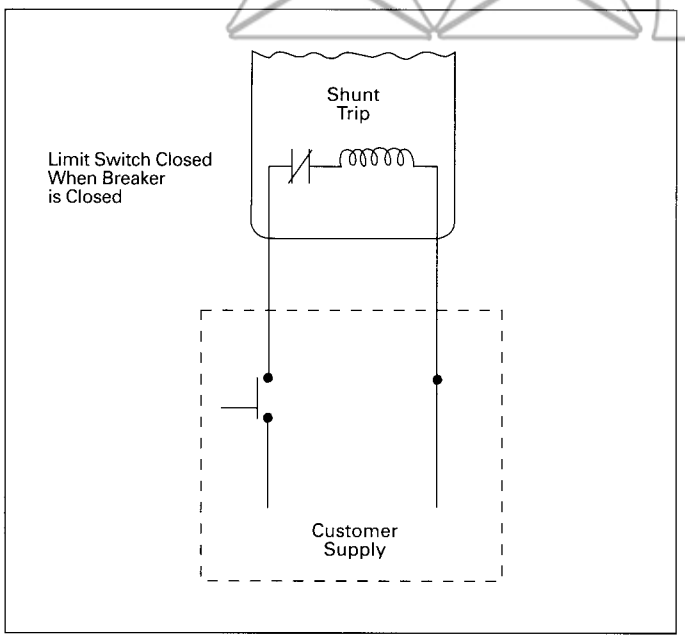

Undervoltage Trip

A. With breaker in TRIPPED position, connect test circuit to accessory leads. Energize undervoltage trip device at 85 percent of the marked rated voltage of the coil. Reset and turn breaker handle ON.

B. Reduce voltage to 35 percent of rated coil voltage. Circuit breaker must trip.

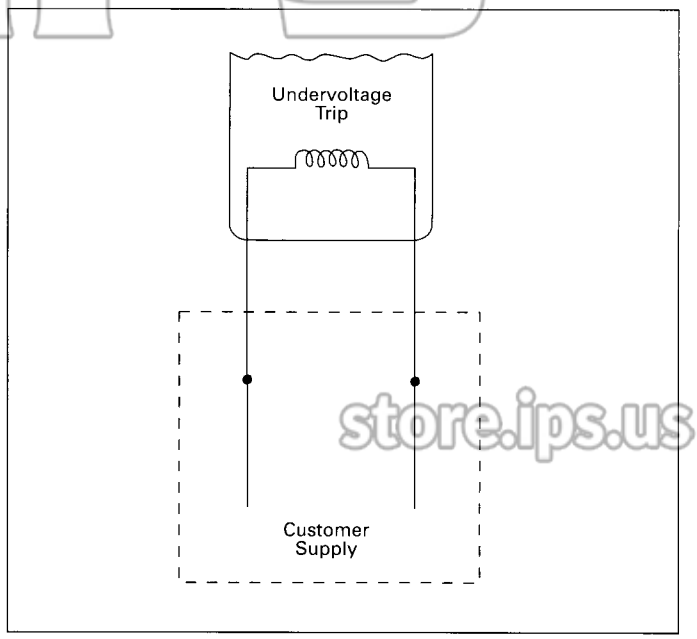

store.ips.us

Electrical Data For Shunt Trip

Coil Voltage	Inrush Current At Rated Voltage (Amperes)	Catalog Number
60 Cycles AC		
12	Consult Sales Office	S19JLD6
24		S17JLD6
48		S18JLD6
120		S01JLD6
208		S02JLD6
240		S03JLD6
277		S15JLD6
480		S04JLD6
600		S06JLD6
DC		
12	Consult Sales Office	S16JLD6
24		S07JLD6
48		S09JLD6
125		S11JLD6
250		S13JLD6

Electrical Data For Undervoltage (UV) Trip① ②

Coil Voltage	Sealed-In Current At Rated Voltage (Amperes)	Catalog Number	
		1 UV Trip Plus 1 Aux. Sw.	1 UV Trip Only
60 Cycles AC			
120	Consult Sales Office	U01JLD62A	U01JLD6
208		U02JLD62A	U02JLD6
240		U03JLD62A	U03JLD6
277		U16JLD64A	U16JLD6
480		U06JLD64A	U06JLD6
600③		N/A	U08JLD6
DC			
24	Consult Sales Office	U13JLD62A	U13JLD6
48		U14JLD62A	U14JLD6
125		U10JLD62A	U10JLD6
250④		U12JLD62A	U12JLD6

① Resistor to be mounted externally of circuit breaker and connected by installer.

② All auxiliary switch ratings are the same as auxiliary switch kit A01FD64.

③ Kit includes a 30k ohm, 25 watt resistor (Clarostat Cat. No. VP-25-K or equivalent).

④ Kit includes a 2.5k ohm, 25 watt resistor (Clarostat Cat. No. VP-25-K or equivalent).

Auxiliary Switch and Bell Alarm Switch

Electrical Check

Auxiliary Switch Kits

Catalog Number	Number of Switches	Ampere Rating of Switch				
		Volts AC			Volts DC	
		120	240	480	125	250
A01JLD64	1	10	10	10	0.5	0.25
A02JLD64	2	10	10	10	0.5	0.25

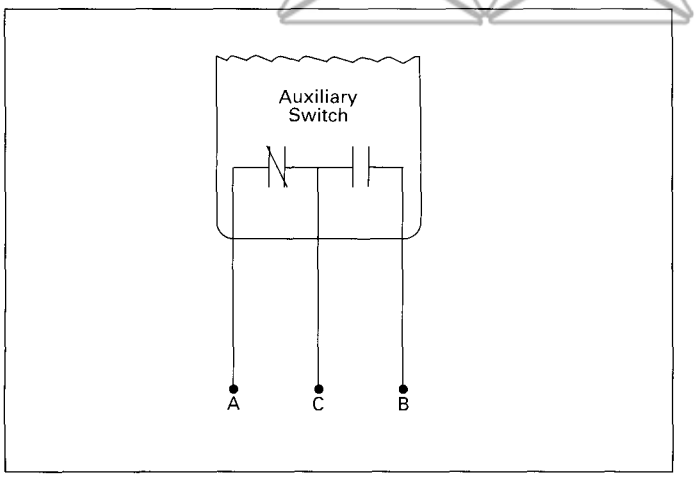

Bell Alarm Switch Kits

Catalog Number	Number of Auxiliary Switches	Ampere Rating of Switch				
		Volts AC			Volts DC	
		125	240	480	125	250
B01JLD64	0	10	10	10	.5	.25
A01JLD64B	1	10	10	10	.5	.25
A02JLD64B	2	10	10	10	.5	.25

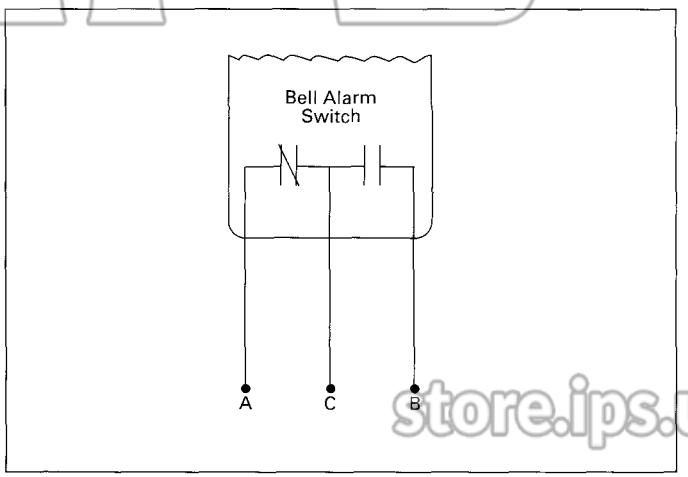

store.ips.us

Switch Identification (All With Three Leads)

Wire Markings	Wire Color	Switch Terminals or Contacts
C or C1	White	C - Common terminal
A or A1	Black	N.O. - Contact open when breaker is open, closed when breaker is closed.
B or B1	Red	N.C. - Contact closed when breaker is open, open when breaker is closed.

Accessory units that employ a combination will have the same wiring colors or identifiers. A double auxiliary switch combination will use wiring markings A-A1, B-B1 and C-C1.

Bell Alarm Identification (All With Three Leads)

Wire Markings	Wire Color	Switch Terminals or Contacts
C	White	C - Common terminal
A	Yellow	N.C. - Normally closed contact (Closed when circuit breaker is tripped.)
B	Brown	N.O. - Normally open contact (Open when circuit breaker is tripped.)

Auxiliary Switch ①

A. Use a buzzer or light indicator attached to switch leads A and C. With breaker in ON position, a light or buzzing noise should be observed.

B. Move handle to OFF position. Indicator light or buzzer should turn off.

C. Attach test to leads B and C. Light or buzzer should turn on.

D. Repeat Steps A through C using leads A1, B1 and C1.

E. Move handle to ON position. Indicator light or buzzer should turn off.

Bell Alarm Switch ①

A. Use a buzzer or light indicator attached to switch leads A and C. With breaker in ON position, trip breaker by depressing red trip button. Indicator light or buzzer should operate.

B. Reset breaker to OFF. Indicator light or buzzer should turn off.

C. Move breaker handle to ON. Indicator light or buzzer should remain off.

① Should the indicator not function properly during "check" procedure, check for incorrect installation or wiring.

Rotary Handle Enclosure Mechanism

Types 1, 12

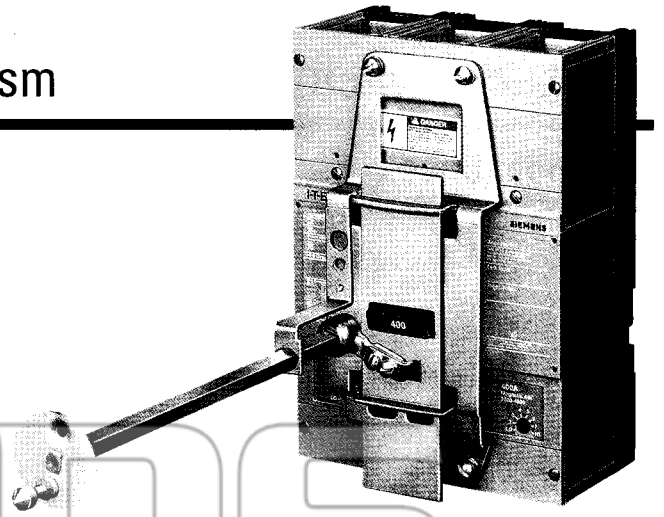

⚠ DANGER

Hazardous Voltage.
Will cause death or severe injury.

Turn power off supplying switchboard or panel before installing.

⚠ Safety Instructions

Variable Depth (D11CJU2)

General
Handle with permit locking the disconnect device in the OFF position using up to three locks having shackles up to 3/8" in dia. Provision for locking in ON position is provided, but the handle plate must have the material covering the locking notch removed. This can be done with a hacksaw or file. The handle has a voidable interlock. Voiding the interlock requires inserting a small screwdriver into the rectangular opening in the handle plate, which will release the handle.

A. Measure distance **F** from breaker mounting surface to top surface of cover. If distance **F** is less than 8" then remove shaft guide bracket.

B. Find length **G** by subtracting 5.50" from **F** dimension. Mark length **G** from underside of operating plate on shaft and cut shaft squarely at mark.

NOTE: Breaker must be "tripped" during installation. Push red button marked PUSH TO TRIP (1).

C. Loosen the two 8-32 screws **(2)** that secure both terminal shields to the breaker, remove the two .28" dia. knockouts **(3)** and fasten circuit breaker with four 3.56 total length fastening members **(4)**. Wire circuit breaker and *replace terminal shields*. Using 1/4-20 x 1-1/2" R.H. screws together with lockwasher and washer supplied with kit, attach mechanism plate assembly on breaker as shown.

D. Insert end of operating shaft into square socket in cast operating arm so that top of shaft has proper relationship to handle as illustrated in photograph on front of instruction sheet. (Breaker or handle may be rotated in 90° increments so long as relationship of handle and top of operating shaft is held.) Tighten set screw in side of cast operating arm (recommended torque—75 in-lbs.).

Handle Mounting
Holes in cover to be as shown in Figure 2. Mount handle with cork gasket on cover and handle mounting plate on inside of cover. Fasten together loosely through cover with the two short screws provided. The two .31" dia. mounting holes must be rotated in the same 90° increments to maintain the handle and operating shaft relationship. Close cover, adjust handle with actuator to be free of binding. Tighten handle mounting screws and operate handle ON and OFF to see that circuit breaker operates satisfactorily.

Courtesy of store.ips.us

Installation Diagrams

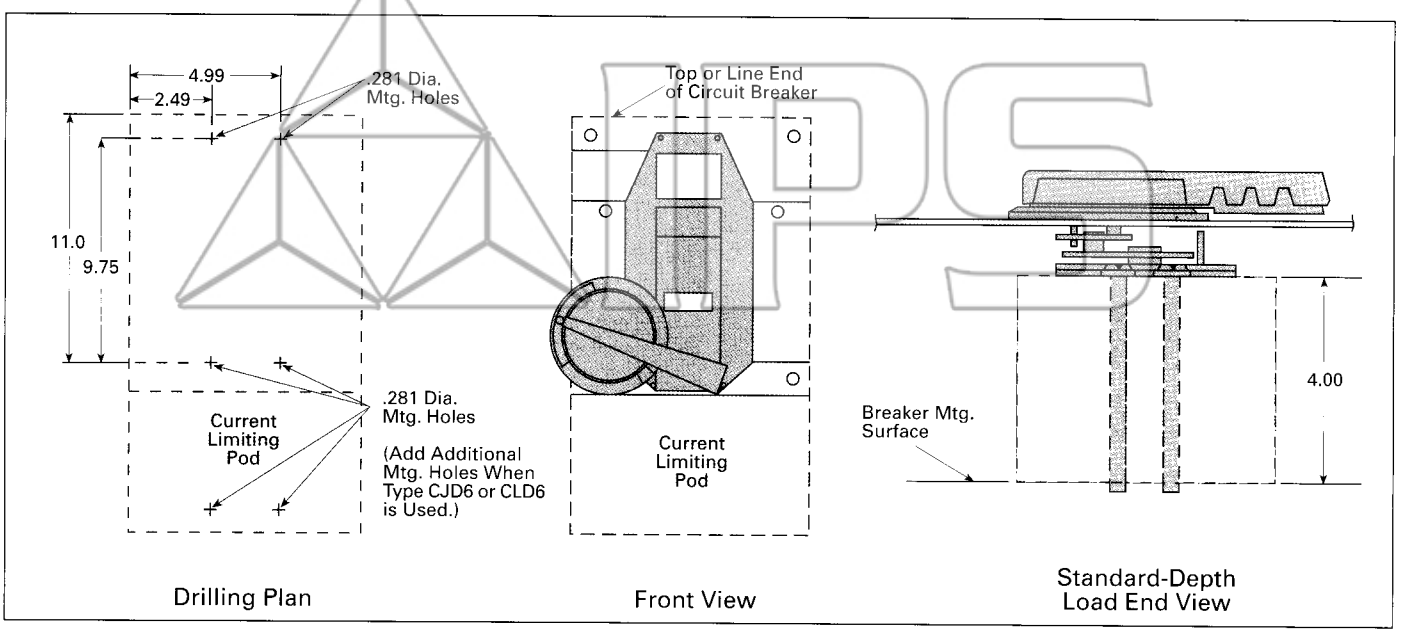

Figure 1

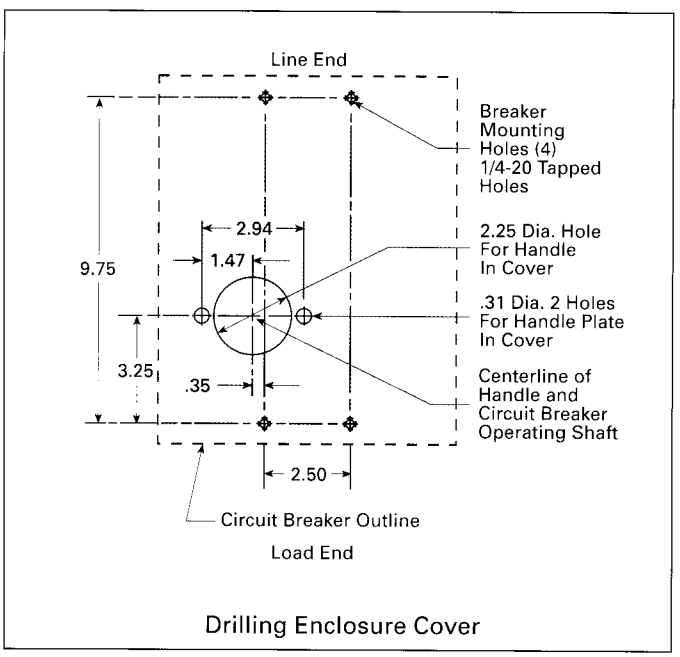

Figure 2

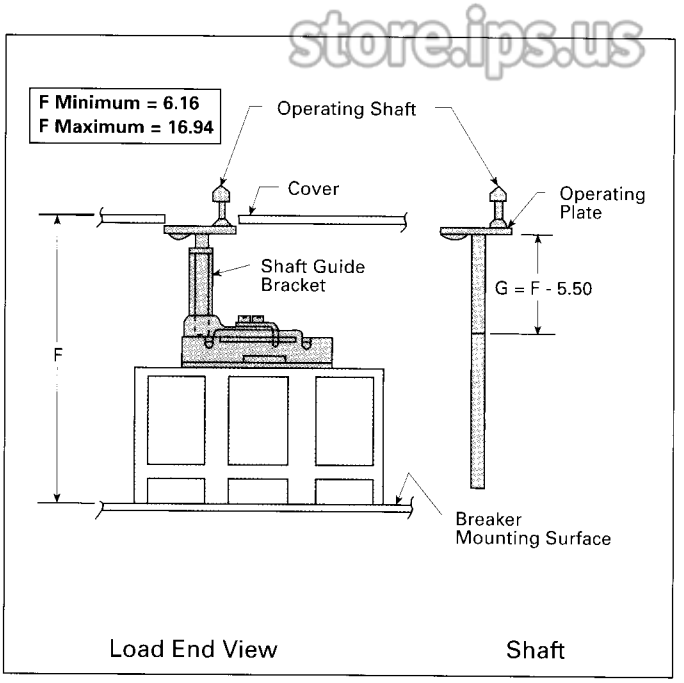

Figure 3

store.ips.us

Courtesy of store.ips.us

Rotary Handle Enclosure Mechanism

Types 1, 3, 3R, 4, 4X, 12

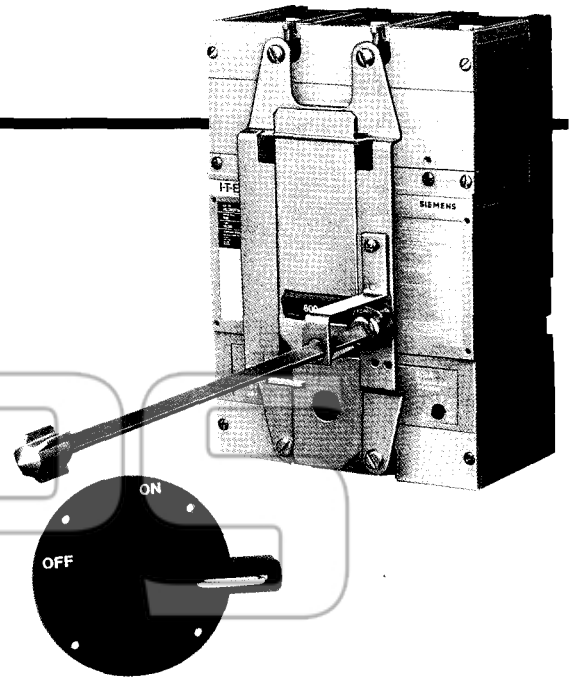

⚠ DANGER

Hazardous Voltage.
Will cause death or severe injury.

Turn power off supplying switchboard or panel before installing.

⚠ Safety Instructions

Standard Depth (CRHOJSD)
Variable Depth (CRHOJVD)

General Information
When properly installed, the rotary handle operator provides single point latching of the enclosure door. For maximum protection against unauthorized entry into the enclosure, additional latching means should be provided. The handle can be padlocked in the OFF position with up to three 5/16" in. padlocks. The breaker operator can also be padlocked in the OFF position.

Drilling of Enclosure

A. Catalog number RHOSSD standard depth shafts are used for minimum depth enclosures. Refer to minimum dimension **K** in Figure 2.
Catalog Number RHOSVD variable depth shafts are used for all other enclosure depths. Shafts are cut to length **L** as shown in Figure 4.

B. Drill and tap circuit breaker mounting holes in breaker mounting surface **(1)** and handle mounting holes in enclosure door **(2)** as shown in Figure 1.

Installation of Breaker and Breaker Operator (RHOJBO)

A. Remove the two terminal shields **(3)** from the circuit breaker and punch or drill out the two .53" dia. knockouts.

NOTE: Cut slots in terminal shields as shown to allow access to terminal lugs after installation of breaker operator without prior removal of mechanism.

Caution: Replace the terminal shields.

B. Mount circuit breaker to enclosure panel using the four breaker mounting screws **(4)** as shown. Tighten to 75 in-lbs.

C. Insert spacers **(5)** into the four circuit breaker mounting holes and attach the breaker operator **(6)** using the four 1/4-20 x 1-3/4" mounting screws **(7)** and 1/4" lockwashers **(8)** as shown. Tighten to 75 in-lbs.

Installation of Shaft (RHOSSD, RHOSVD)

A. Shaft length for Variable Depth Operators **L** = **K** – 3.94". Attach the shaft **(9)** to the operating arm **(10)** of the breaker operator and tighten the set screw to 70 in-lbs. min.

NOTE: The proper orientation of the "wings" (11) (shown in off position) at the end of the shaft when the breaker is in the OFF position (Figure 4).

NOTE: It is recommended that the shaft support bracket (12) be installed if the enclosure depth exceeds 10". Attach as shown in Figure 3. Tighten to 45 in-lbs.

Installation of Handle (CRHOH)

A. Attach the handle **(13)** and gasket **(14)** to the enclosure door **(15)** and secure with four bolts, flatwashers, lockwashers and nuts supplied **(16)**. Tighten nuts to 76 in-lbs. (Figure 5).

B. When the enclosure door is closed, check if the handle interlocks with the shaft in all handle positions except RESET/OPEN. To open the enclosure door when the breaker is in the ON position rotate the screw slot on the handle plate counter-clockwise. This procedure will defeat the interlock.

C. To lock handle in OFF position, pull the lockplate **(17)** from the handle and insert up to three 5/16" padlocks.

NOTE: RHOSSD Shaft is 2.93" long.
RHOSVD Shaft is 13.25" long.

Installation Diagrams

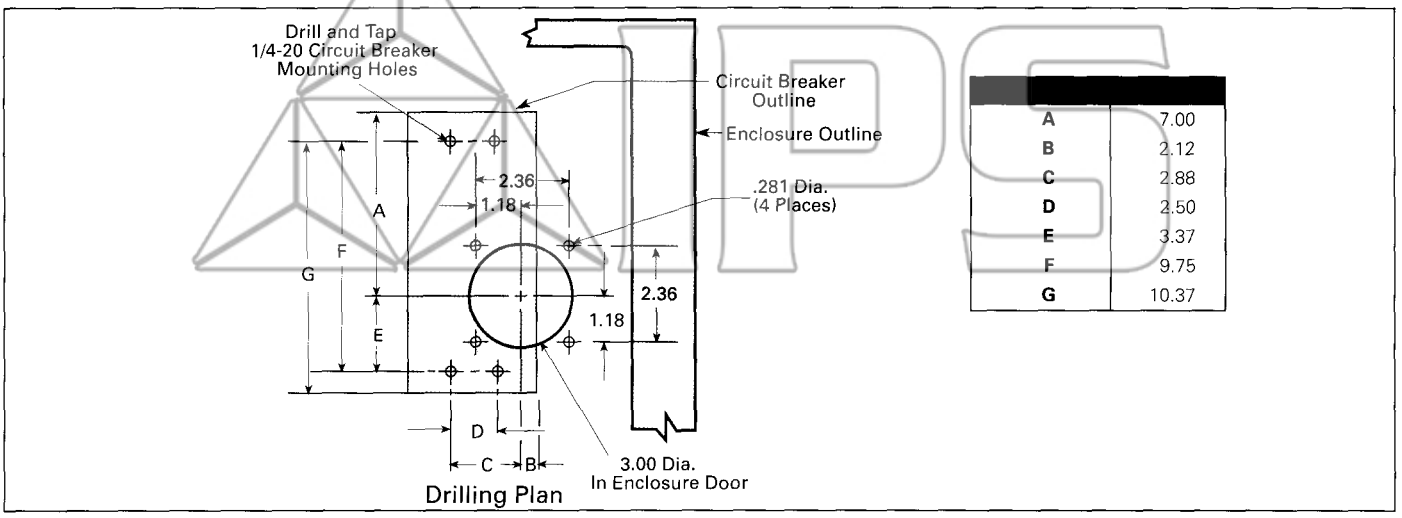

Figure 1

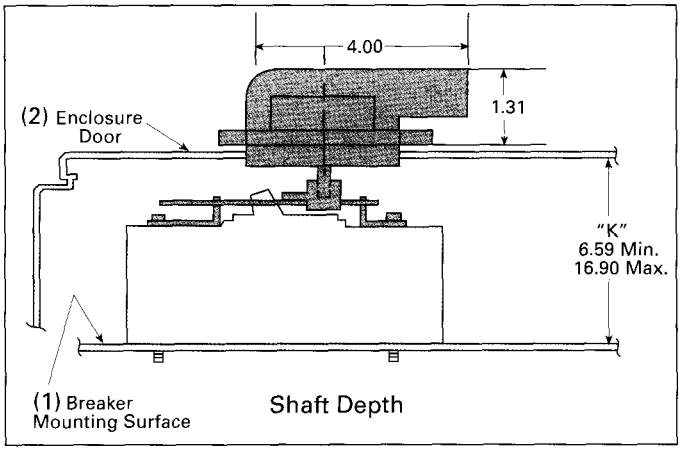

Figure 2

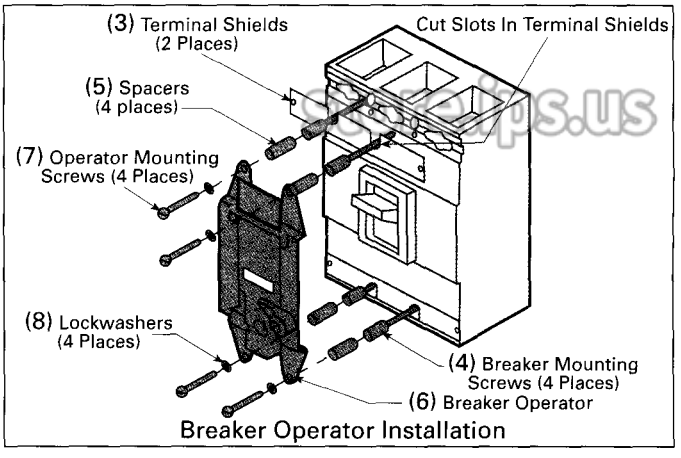

Figure 3

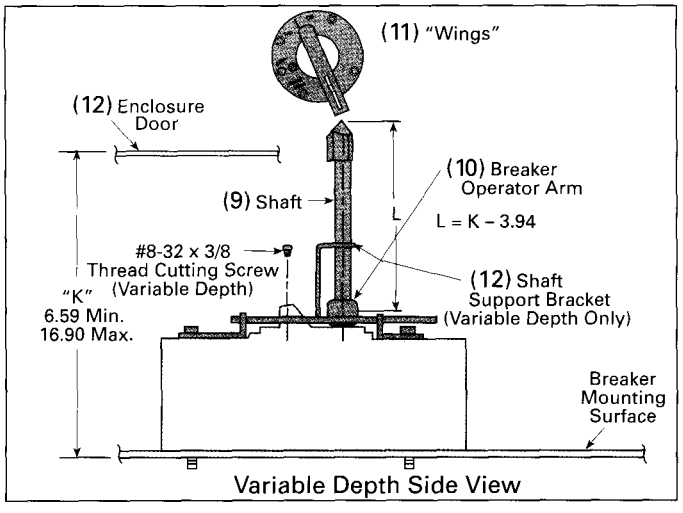

Figure 4

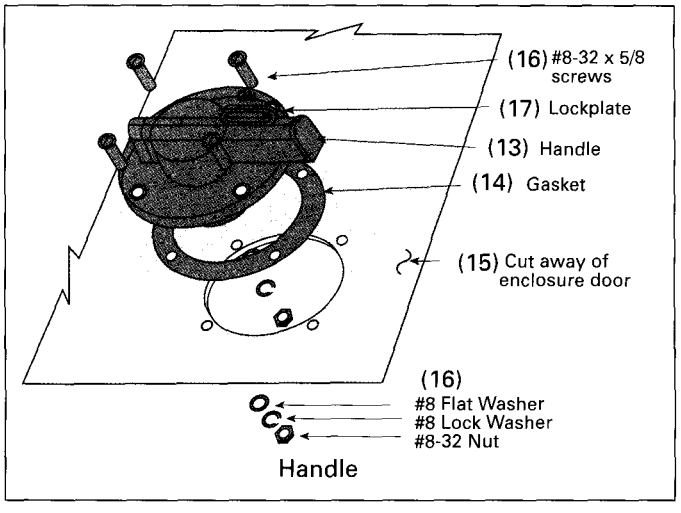

Figure 5

⚠ DANGER

Hazardous Voltage.
Will cause death or severe injury.

Turn power off supplying switchboard or panel before installing.

⚠ Safety Instructions

General

The motor operated mechanism is designed to open, close and reset a circuit breaker or switch by remote control. The customer must supply the circuit breaker or switch, normally ON and OFF momentary type push-buttons, external wiring, a control power source, and all control logic. Consult the wiring diagram (Figure 3, page 29) for a typical control connection.

The motor operator is hinged for opening to the left or right dependent on catalog number designation. The "L" suffix means the motor operator is hinged to the left. A motor operator hinged to the right uses no suffix.

NOTE: For automatic reset operation a separate auxiliary contact must be provided by the customer. See page 28 for more details.

Operator Selection

Motor Operator*	Frame	For Use With I-T-E Circuit Breakers and Switch Types
MOJ6120 MOJ6120L, MOJ6240, MOJ6240L	JD, LD	JXD2(-A), JD6(-A), JXD6(-A), HJD6(-A), HJXD6(-A), HHJD6, HHJXD6, LD6(-A), LXD6(-A), HLD6(-A), HLXD6(-A), HHLD6, HHLXD6, CJD6, CJD6-ETI, CLD6, CLD6-ETI

*All motor operator types are compatible to all circuit breaker types

Installation

A. Turn off and lock out all power supplying circuit breaker and motor operator before installing or servicing.

B. Attach the circuit breaker to its mounting surface using the mounting hardware **(1)** supplied with the motor operator (Figure 2).

C. Remove the four shield screws **(2)** and two lug shields **(3)** (Figure 1).

D. Replace the shields with those provided with the motor operator and discard the shields which were removed.

E. Open the motor operator cover and attach the motor operator to the circuit breaker using the spacers **(4)** and screws **(5)** provided (Figure 2).

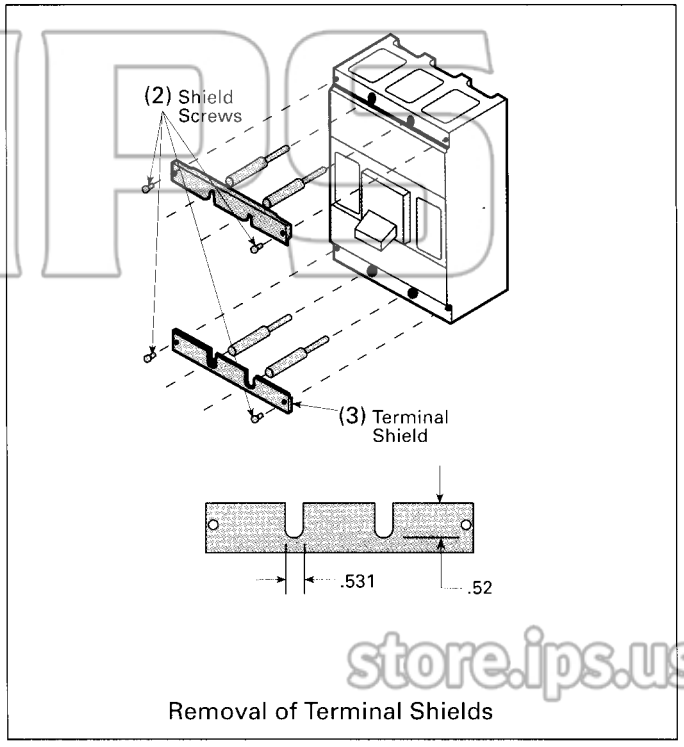

Removal of Terminal Shields

Figure 1

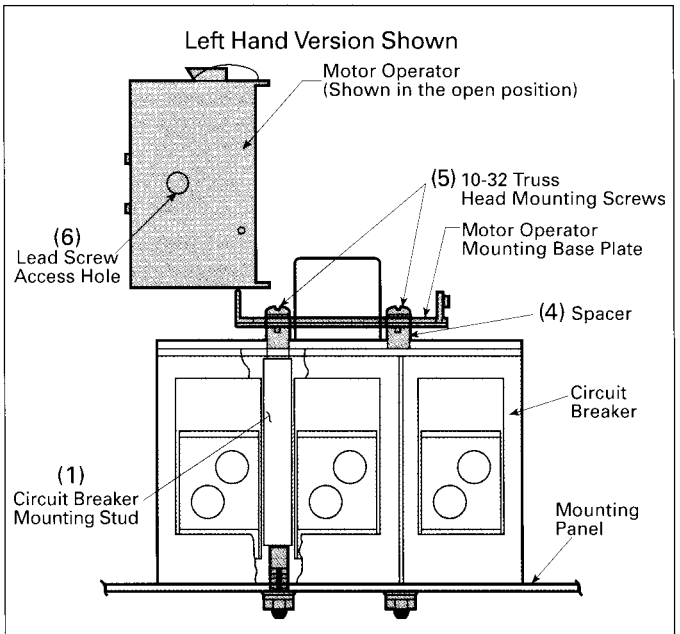

Breaker and Motor Operator

Figure 2

Courtesy of store.ips.us

F. With the circuit breaker handle in the OFF position, align the motor operator mechanism rollers (indicator to be in OFF position) and the circuit breaker handle by rotating the lead screw **(6)** with a screwdriver. The lead screw access hole is at the bottom of the motor operator (Figure 2).

G. Close and latch the mechanism cover.

H. Complete the desired control connections and electrically test the motor operator system before reenergizing the breaker power terminals in accordance with the electrical operation.

Electrical Characteristics

Catalog Numbers	Volts AC	Amperes
MOJ6120 MOJ6120L	120	10.0 Amperes Inrush 6.0 Amperes Running
MOJ6240 MOJ6240L	240	5.8 Amperes Inrush 2.8 Amperes Running

Electrical Operation

With the breaker and the operating mechanism in the OFF position, press the ON button to energize the motor. The action will close the breaker. When the breaker handle reaches the ON position, the motor circuit is disconnected by an internal limit switch.

With the breaker and the operating mechanism in the ON position, press the OFF button to energize the motor. The action will open the breaker. When the breaker handle reaches the OFF position, the motor circuit is disconnected by an internal limit switch.

When the circuit breaker trips automatically, there is no external indication that the breaker has tripped unless a separate Bell Alarm accessory (contact Siemens for appropriate catalog number) is provided to energize a customer furnished warning device. After the circuit breaker trips automatically, it is necessary to press the OFF button to move the breaker handle to the reset position.

Automatic Reset

For automatic reset, an auxiliary switch (contact Siemens for appropriate catalog number) is used to return the breaker to the OFF/RESET position after it has been tripped. This auxiliary switch is mounted inside the breaker and wired in parallel with the OFF button. When the breaker trips, the auxiliary switch closes, energizing the motor circuit which moves the breaker to the OFF/RESET position.

After the motor operated mechanism has reset the breaker, the motor operator internal limit switch opens the circuit. To provide automatic reset, the ON push button must be a single pole, double throw device and it must be wired per Figure 3.

Manual Operation

Operate the two cover latches and swing the hinged motor operator cover away from the breaker to expose the breaker handle. To return to electrical operation, follow the installation instructions on page 34 deleting Steps B through E. After operation checks are complete, restore to normal operation.

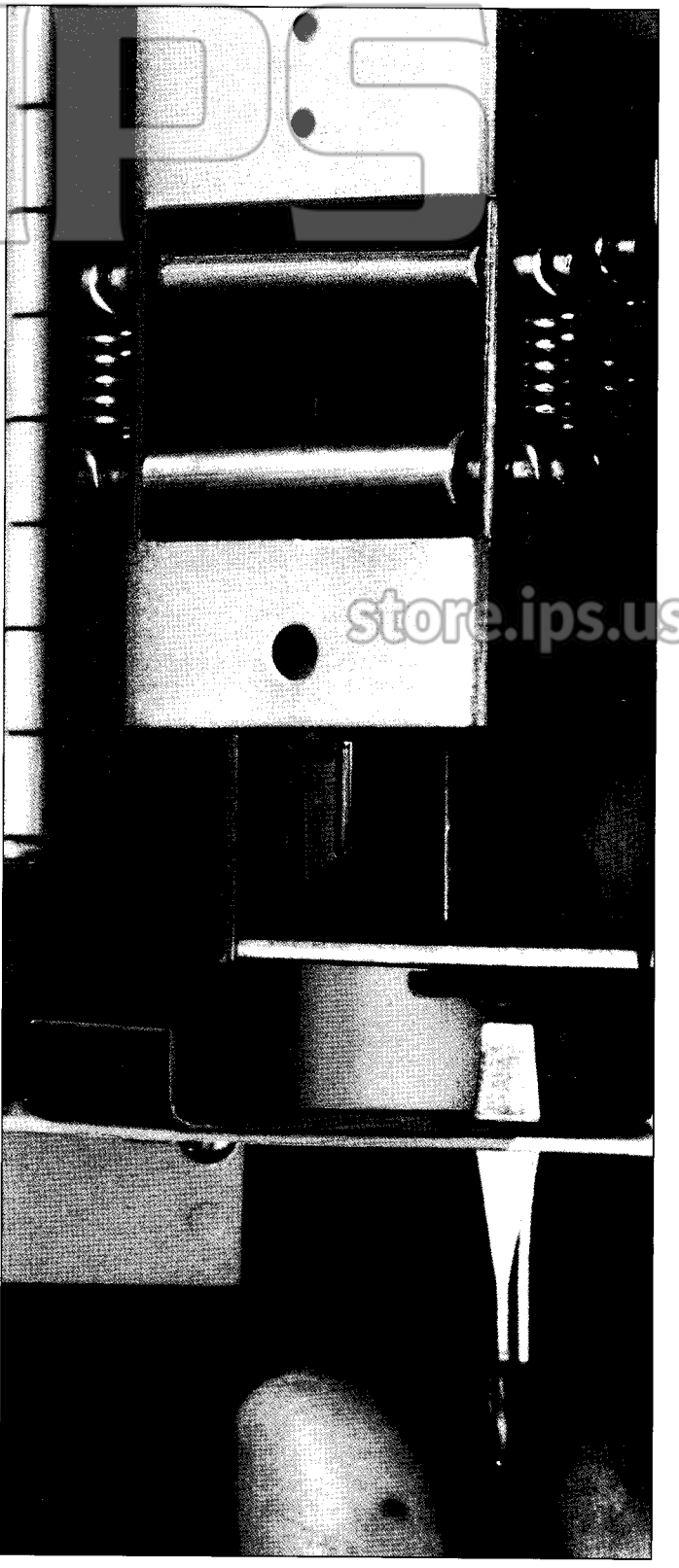

Align Rollers and Handle

store.ips.us

Installation Diagrams

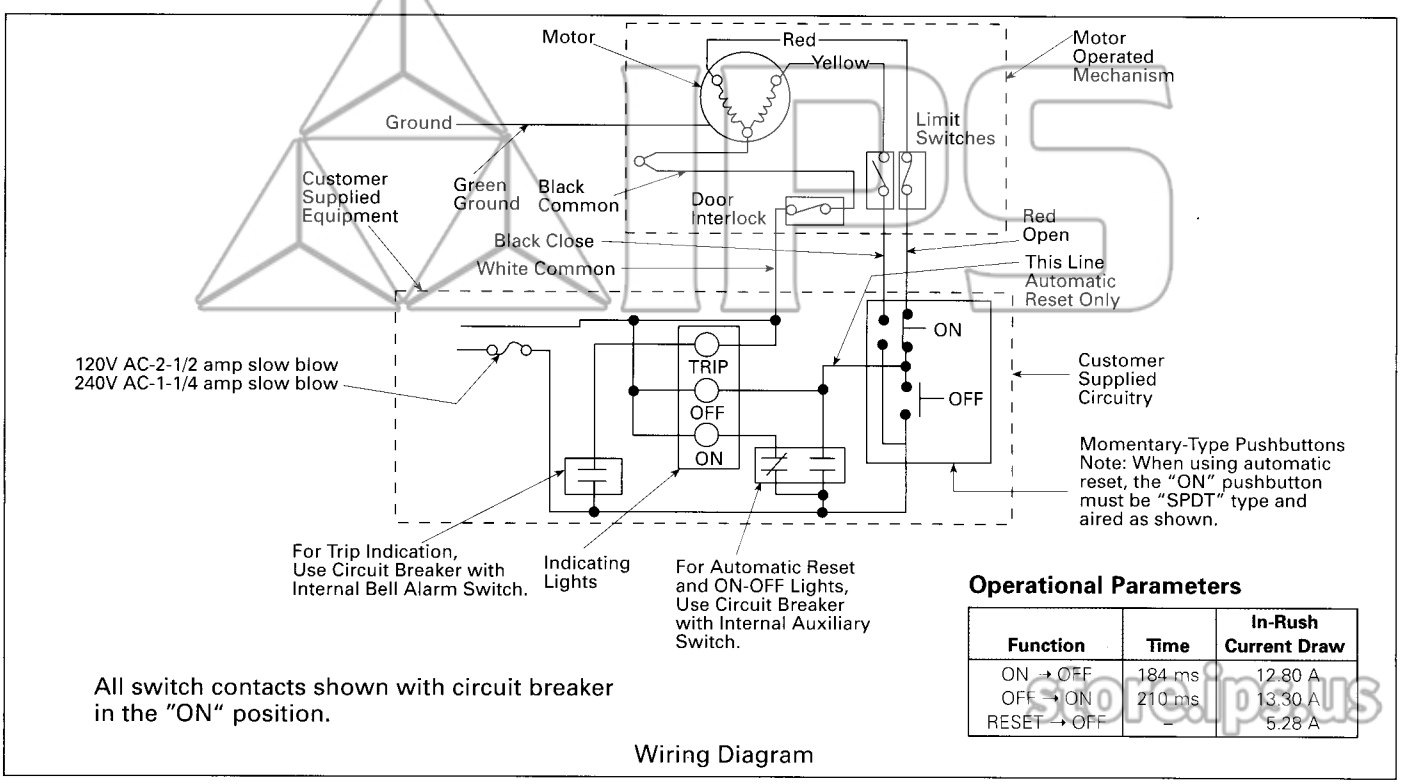

Operational Parameters

Function	Time	In-Rush Current Draw
ON → OFF	184 ms	12.80 A
OFF → ON	210 ms	13.30 A
RESET → OFF	–	5.28 A

Wiring Diagram

Figure 3

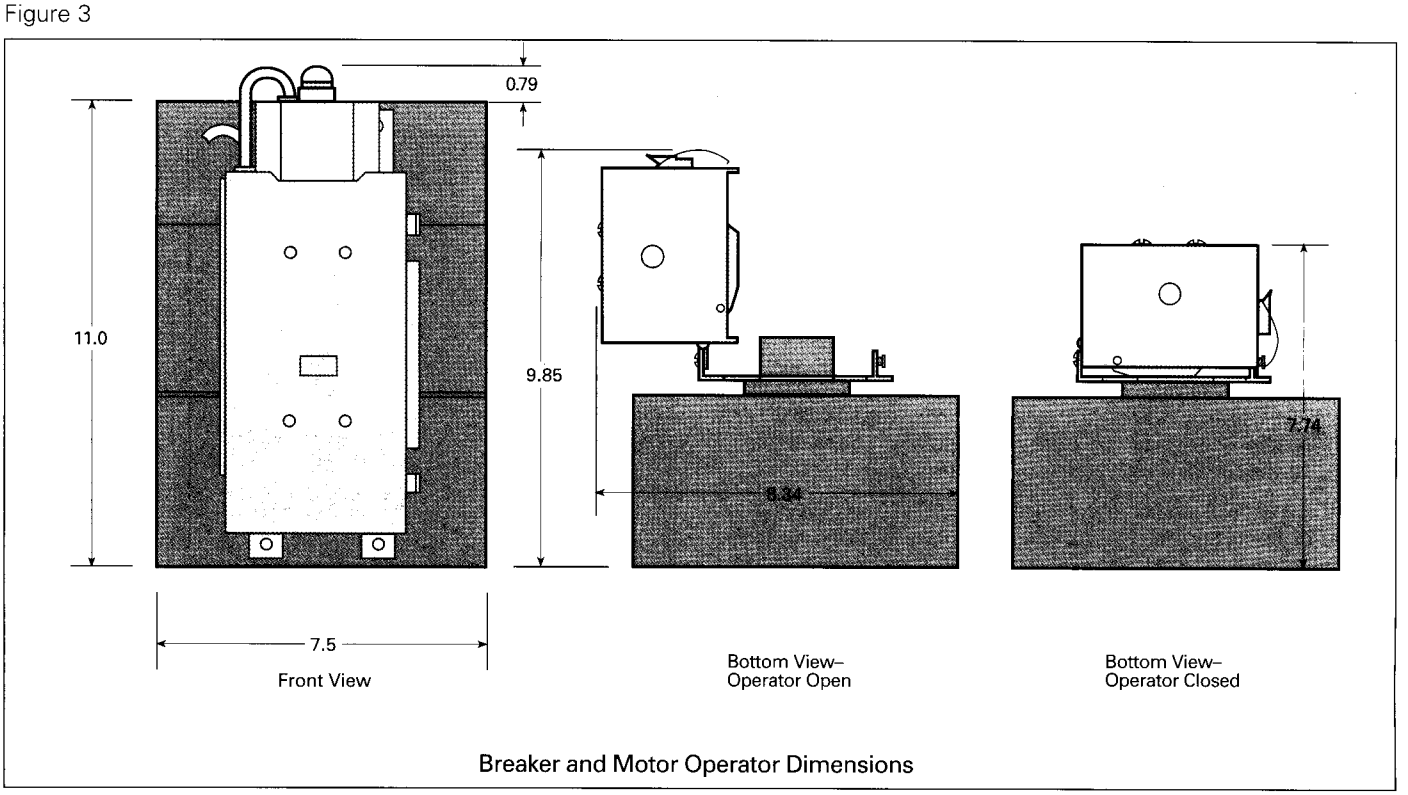

Breaker and Motor Operator Dimensions

Figure 4

Courtesy of store.ips.us

Max-Flex™ Flange-Mount Handle Operator

Types 1, 3, 3R, 4, 4X, 12

⚠ DANGER

Hazardous Voltage.
Will cause death or severe injury.

Turn power off supplying switchboard or panel before installing.

⚠ Safety Instructions

General Information

Description
The Max-Flex™ Flange-Mount Handle Operator is a flexible cable control device used for the remote switching of a circuit breaker within an enclosure. The flexible cable is connected directly to the breaker switch handle at one end and a factory installed switch handle operator at the other end. The remote operator handle, located on the enclosure flange, is used to perform mechanical open/close switching operations. This is accomplished through the cable's sliding center race enclosed within the cable.

Function
The advanced design concept of the Max-Flex Handle Operator provides for greater flexibility when locating a circuit breaker within an enclosure. The circuit breaker can be mounted almost anywhere, at any angle and on almost any convenient surface. The same flexibility applies when locating the switch handle operator on the flange section of the enclosure.

Application
The Max-Flex Operator is designed to work with circuit breakers having current ratings through 600A. The Max-Flex unit meets all the industrial criteria such as UL and Automotive Industry Standards.

Design
The new Max-Flex Handle Operator provides maximum flexibility in design and assembly of electrical equipment. Since there are no linkages to assemble, the Max-Flex system can save time during installation.

The cable design is flexible and rugged. It is similar to those cables used in aircraft control systems. The flexible cable comes in standard 3 or 4' lengths. However, specific lengths can be special ordered up to 20'.

Operation
When properly installed, the Max-Flex Handle Operator is used to perform remote switching operations from outside of the enclosure. Switching is accomplished by pushing the Max-Flex Handle Operator up for ON and down for OFF. The mechanical advantage gained with this device simplifies switching operations when compared with local switching at the breaker.

This unique design offers breaker trip indication as a standard feature. Interlocking provisions are included and described below. All switching functions are standard to accepted practices.

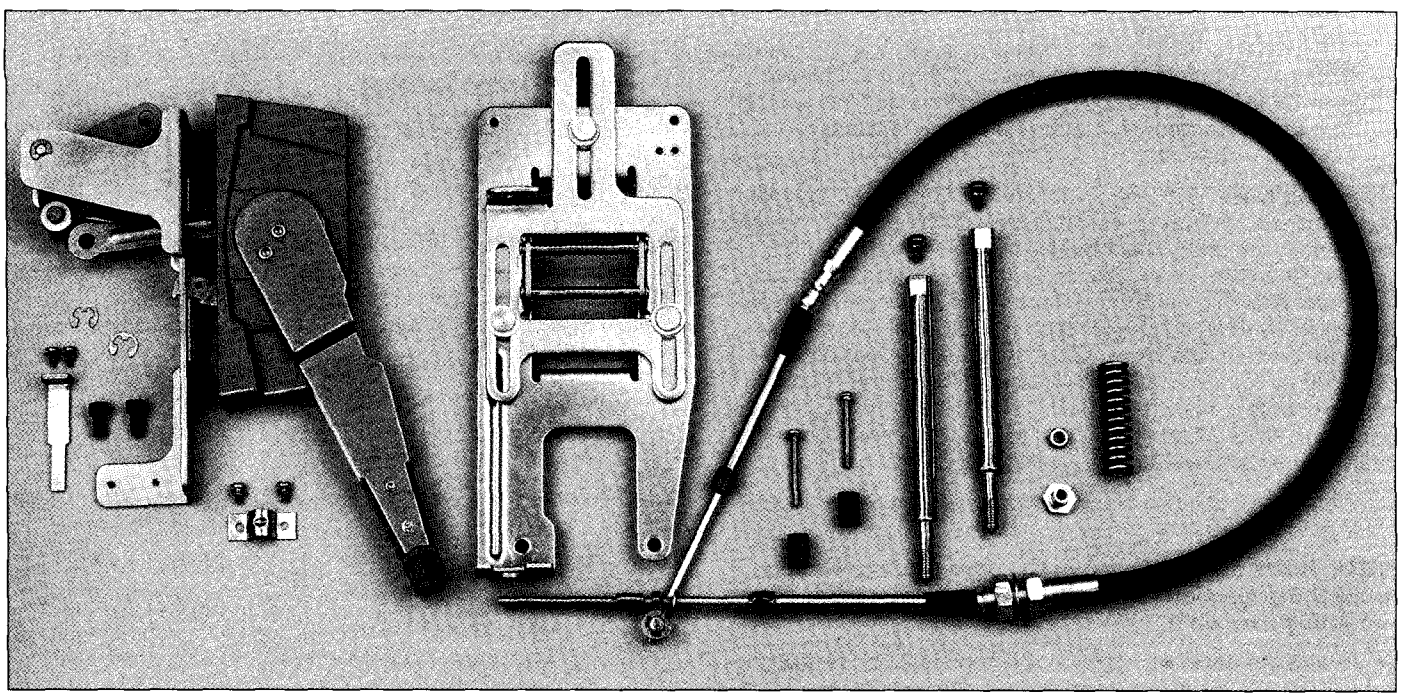

Unassembled Max-Flex™ Flange-Mount Handle Operator

Courtesy of store.ips.us

Max-Flex™ Flange-Mount Handle Operator

Types 1, 3, 3R, 4, 4X, 12

Installation

Mounting Max-Flex™ Handle Operator to Enclosure Frame Assembly

A. Drill the mounting holes in the enclosure flange and file all burrs (Figures 1 and 2). Note the maximum and minimum drill hole distances in Figure 2.

B. Push the rubber gasket **(1)** down in the groove of the handle assembly **(2)** (Figure 3).

C. The handle and the interlock mechanism are supplied pre-assembled from the factory.

NOTE: For ease of assembly, move the operating handle to the ON position. (up toward the top of the enclosure). Mount the frame (4) and handle assembly (2) to the enclosure flange (5) with two #1/4-20 x 3/4" socket head cap screws and lockwashers. Tighten cap screws from within the enclosure (Figure 3).

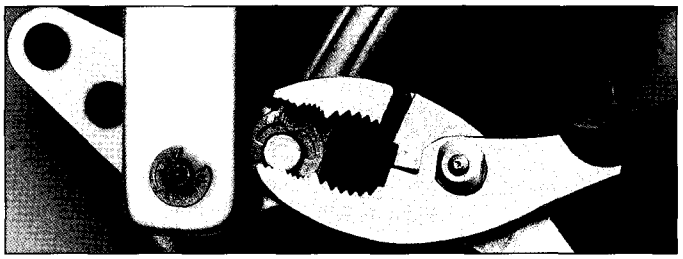

Secure E-Ring Connection

A. Rotate the bellcrank **(6)** clockwise to engage the return spring **(7)**. Hold the bellcrank in position and place the plastic washer **(8)** and connecting link **(9)** onto the bellcrank pin **(10)**. Using pliers, secure the connection with an E-ring **(11)** (Figure 3).

B. Mount the interlock lever extension **(12)** to the interlock lever **(3)** using #8-32 x 3/8" machine screw and lockwasher. Screw mounts through the threaded lever extension into the lever (Figure 3).

Operating Note: With the enclosure door open, the operating handle cannot be moved from the OFF to ON position without deliberately defeating the interlock mechanism. In the OFF position, the interlock can be defeated by pushing the interlock lever extension **(12)** downward while moving the handle to the ON position (Figure 2). With the enclosure door closed and the handle in the ON position, the interlock can be defeated by turning the defeater screw **(13)** on the operating handle counter-clockwise on left-hand side and clockwise on right-hand side. When the enclosure door is closed, the door latch mechanism now automatically defeats the interlock.

C. Weld the door catch bracket **(14)** to the enclosure door. (Figures 2 and 4).

NOTE: Holes may be drilled in the door catch bracket using the projections as centers. *User must provide the mounting hardware.*

D. Fasten the door catch **(15)** to the door catch bracket with two #8-32 x 5/16" pan head screws and external tooth lockwashers (Figure 2).

Installation Diagrams

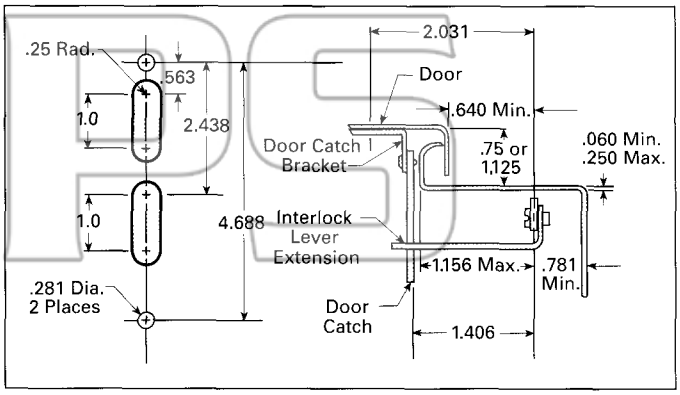

Figures 1 and 2

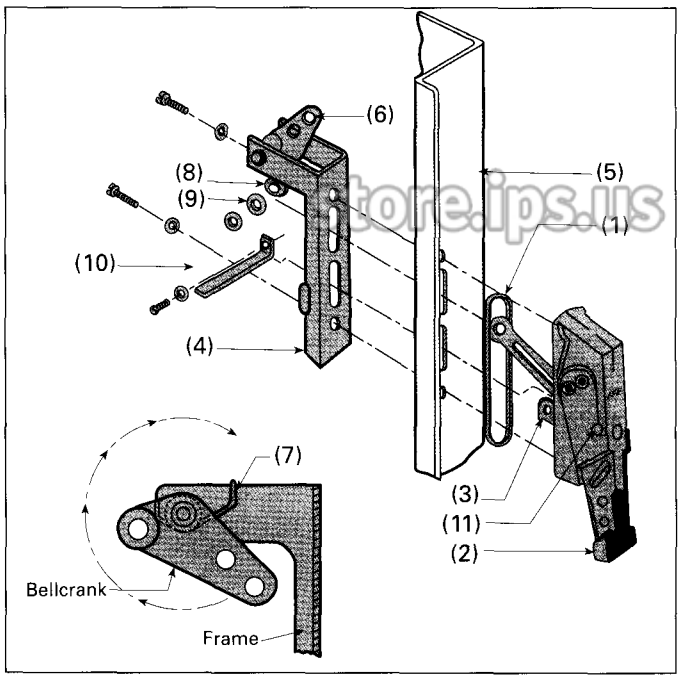

Figure 3

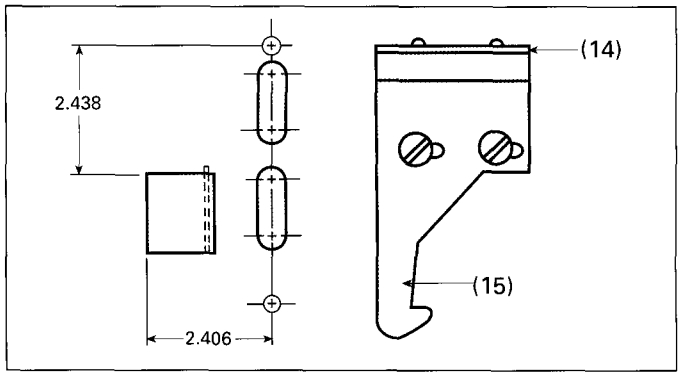

Figure 4

Courtesy of store.ips.us

Adjusting Door Catch Mechanism

A. Close the enclosure door and move the handle into the ON position. Adjust the door catch downward if the handle cannot be moved from the ON position.

B. With the handle in the ON position, try to open the enclosure door without turning the defeater screw in the handle. If the door opens, readjust the door catch and repeat Steps A and B.

Mounting Breaker Operator

The circuit breaker can be mounted remotely from the handle within a range that is limited by the length of the operating cable **(16)** (Figure 7) and the depth of the enclosure. Table 2 and Figure 5 show the horizontal range **E** of the circuit breaker in 8 to 30" enclosures.

Table 1 – Circuit Breaker Mounting Dimensions

Breaker Type	A	B	C	D	Tap Size
CJD6, CJD6-ETI, CLD6, CLD6-ETI	2.5	9.75	.625	17.23	1/4-20
All Other Types	2.5	9.75	.625	10.625	1/4-20

Table 2 – Maximum E Dimensions①

Cable	Enclosure Depth (Inches)							
	8"	10"	12"	16"	18"	20"	24"	30"
FHOJCO36 (36")	10.7	10.5	10.0	7.9	6.1	3.2	–	–
FHOJCO48 (48")	22.7	22.6	22.3	21.3	20.5	19.6	16.9	9.9

② Maximum E dimension only if F=4.6.

Table 3 – F Dimensions

Enclosure Depth	36" Cable		48" Cable	
	Min.	Max.	Min.	Max.
8	-4.2	15.5	-16.0	27.0
10	-5.2	15.0	-16.5	27.0
12	-6.0	14.7	-17.0	26.8
16	-4.5	14.2	-16.5	26.5
18	-3.4	12.8	-16.0	25.5
20	0.6	10.0	-15.5	24.5
24	–	–	-14.0	22.5
30	–	–	-8.7	17.4

NOTE: When installed, the cable bend radius should not be less than 3". This minimum wire bending requirement must be met to insure operating safety. The mounting procedure is as follows:

A. Determine the desired circuit breaker mounting location using Tables 1, 2 and Figure 5.

B. Drill and tap four mounting holes **(17)** in the enclosure back panel using dimensions **A** and **B** from Table 1.

C. Remove the four terminal shield screws **(18)** and two terminal shields **(19)**.

D. Punch or drill out the two .531" dia. knockouts in the terminal shields. REPLACE THE SHIELDS.

E. Fasten circuit breaker to prepared mounting surface using four breaker mounting screws **(20)**.

Installation Diagrams

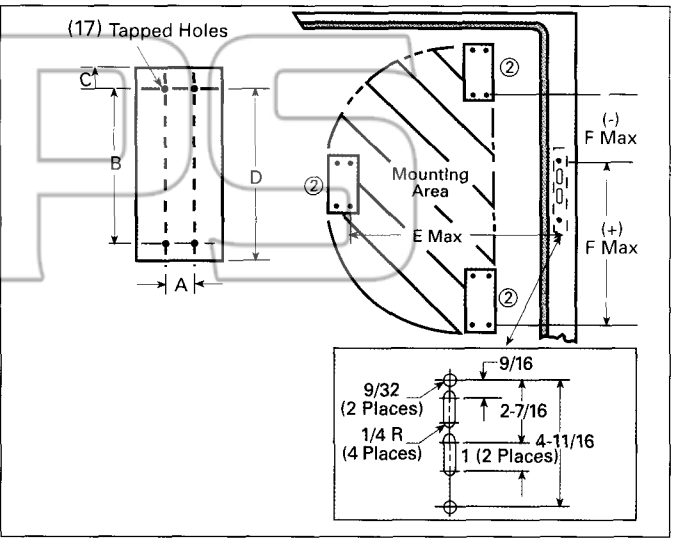

Figure 5

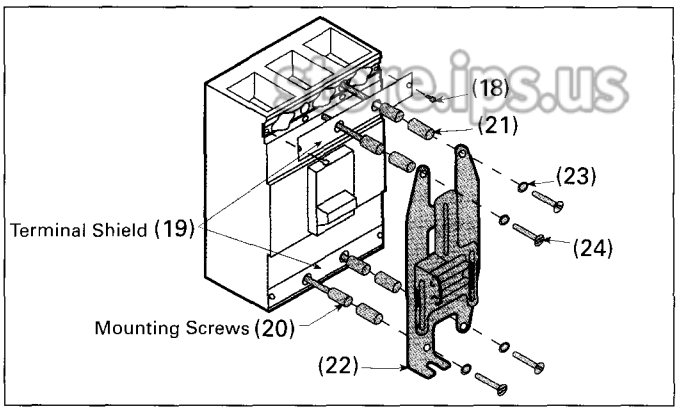

Figure 6

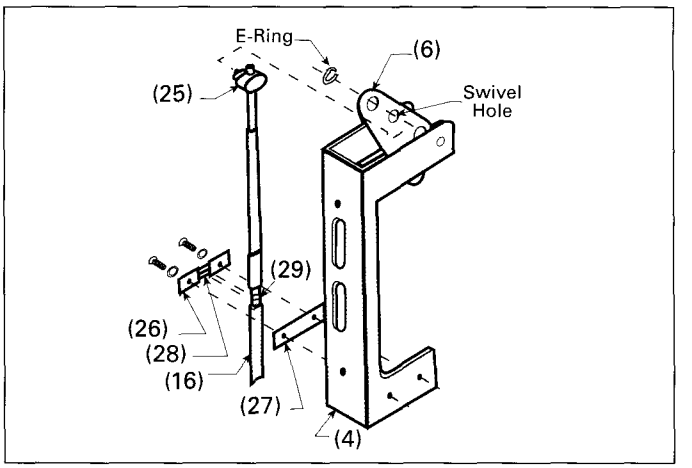

Figure 7

② Outlines represent breaker operator, not circuit breaker footprint.

Courtesy of store.ips.us

F. Place the four spacers **(21)** into the breaker mounting holes.

G. Fasten circuit breaker operating mechanism **(22)** onto circuit breaker with four lockwashers **(23)** and four 1/4-20 x 1-3/4" screws **(24)**.

Securing Operating Cable to Frame Assembly

A. To attach the operating cable **(16)** to the frame assembly **(4)**, move the operating handle **(2)** to the ON position and attach the cable swivel **(25)** to the outer hole of the bell-crank **(6)**. Secure the connection with an E Ring (Figure 7).



Tighten Detent Screws

B. Secure the cable **(16)** to the frame assembly **(4)** by placing it between the cable retainer clip **(26)** and the shim **(27)**, secure with two #10-32 x 3/8" screws and lockwashers.

NOTE: Detent (28) in cable retainer must align with the groove (29) in the cable's metal fitting (Figure 7).

Securing Operating Cable to Circuit Breaker

NOTE: Before attaching the cable to the circuit breaker, installers *must* confirm that the power from the supply source has been de-energized.

A. Move the circuit breaker handle to the ON position.

B. Remove the soft plastic cap from the end of the threaded cable rod **(30)** and slide the rod through the hole in the sliding plate tab **(31)** of the circuit breaker operating mechanism **(22)** (Figure 8).

C. Move the flange mount operating handle **(2)** to its maximum ON position and hold it in place.

D. Place the cable mounting threads **(30)** into the slot on the fixed plate tab **(32)** so that the two mounting nuts **(33)** are on both sides of the tab. Adjust the two mounting nuts so that the #10-32 nut on the cable rod just touches the sliding plate tab **(31)**. Tighten the mounting nuts **(33)** to secure the cable (Figure 8).

E. Continue holding the operating handle in the ON position and place the spring **(34)** over the end of the rod. Screw on the spring adjuster **(35)** and tighten until it begins to compress the spring. Do not overtighten.

Making Cable Adjustments

A. Check that circuit breaker turns OFF and ON by moving the operating handle **(2)** up for ON and down for OFF. If the breaker does not switch ON, loosen the cable mounting nuts **(29)** at the fixed plate tab **(28)**, hold the operating handle in the maximum ON position, and move the cable **(16)** toward the top of the breaker. Retighten the mounting nuts **(29)** to secure.

B. Trip the circuit breaker by pressing the PUSH TO TRIP button on the front of the circuit breaker.

C. Check that the circuit breaker resets by moving the operating handle **(2)** from ON to OFF and back to ON. If the breaker resets, tighten the spring adjuster **(31)** one additional turn. Attach the lockwasher and #10-32 locknut **(32)** to the end of the cable rod, and tighten the locknut.

D. If the circuit breaker does not reset after Step B, tighten the spring adjuster **(35)** one turn and repeat Step B. Continue this procedure until the breaker does reset, then tighten the adjuster spring one additional turn. Secure with the lockwasher and locknut **(36)**.

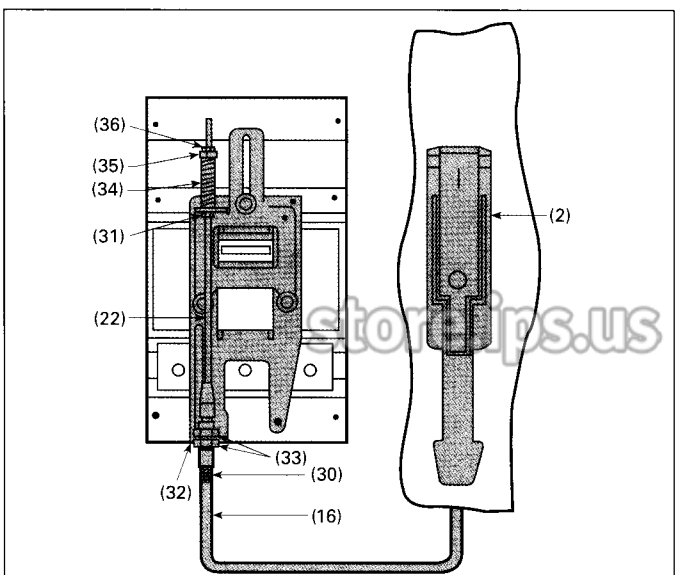

Max-Flex™ Handle Operator Assembled to Breaker

Figure 8

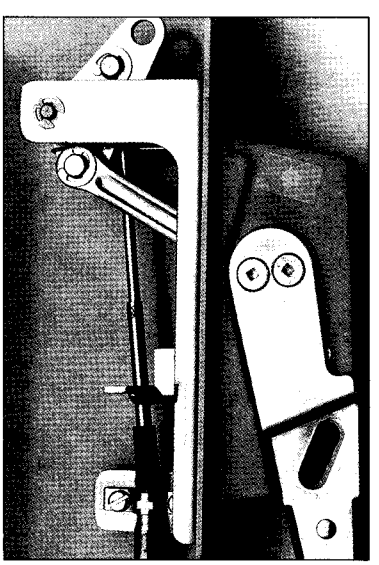

Side View of Max-Flex™ Handle Operator

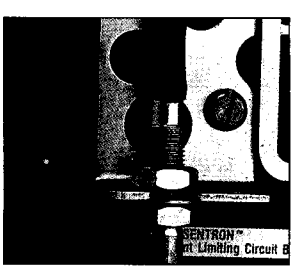

Fixed Plate Adjustment



Spring Adjustment

Courtesy of store.ips.us

Door Latch Mechanism (DKR2, DKR3, DKL2, DKL3)①

⚠ DANGER

Hazardous Voltage.
Will cause death or severe injury.

Turn power off supplying switchboard or panel before installing.

⚠ Safety Instructions

General Information
These door latch mechanisms are for use in standard or custom built enclosures. The door latch post assemblies and the door catch are supplied with the kits. *Users must supply their own 1/4" x 1/2" steel latch bar.* Enclosures with an overall height less than 40 in. require the two-point door latch mechanism. When the overall height is greater than 40", the three-point latch mechanism is used.

The door latch mechanism can be used with or without the type FHOH Flange Mount Handle Operator. These instructions apply when the door latch mechanism is mounted adjacent to and interlocks with the FHOH Handle Operator. The door handle can be padlocked to prevent unauthorized entry into the enclosure. Drawings in these installation instructions are oriented for right-hand flange installation. Left-hand flange installation drawings are mirror images of the right-hand versions. For left-hand flange installation, substitute "clock-wise" for "counterclockwise" and vice versa, whenever those words appear.

Installation of the Door Latch Mechanism

A. Drill mounting holes in the enclosure door observing the minimum dimensions shown in Figure 2. See FHOH Handle Operator instructions for flange drilling pattern.

NOTE: D and E dimensions are determined by the height of the enclosure.

Refer to Figure 1 for the following steps:

B. Place gasket **(1)** on handle plate **(2)** and attach handle plate to enclosure door with two thin wall hex nuts **(3)**. Tighten the nuts to 100 in-lbs.

C. Insert lockout screw **(4)** and handle **(5)** through holes in the handle plate.

D. Install latch bar post assembly **(6)** (screw, sealing washer, flat washer, and special hex nut **(7)**, if used.)

E. Attach top **(8)**, bottom **(9)** and latch plate rollers **(10)** to latch bar with retaining pins and E-rings.

NOTE: Two-point latch does not have bottom roller.

F. Fasten the top and bottom rollers to the enclosure door with locking type flange nuts. Tighten the nuts, then loosen them 1/8 turn to allow movement of the roller assemblies.

G. Place bottom spring **(11)** over the bottom thin wall hex nut inside the enclosure door.

H. Turn the handle 1/4 turn clockwise (looking from inside the enclosure door) and attach the latch plate roller to the handle shaft, while inserting the bent leg of the spring into the hole in the latch plate. Fasten with a locking-type flange nut. Tighten the nut, then loosen 1/8 turn to allow movement of the roller assemblies (Figure 1).

NOTE: Straight leg of spring must rest against pin (12) on handle plate. See inset on Figure 1.

I. Place top spring **(13)** over top thin wall hex nut. Attach lockout plate **(14)** to lockout screw using locking type flange nut. Tighten flange nut. Insert bent leg of spring into hole in lockout plate as shown in Figure 1 detail.

J. Attach the interlock defeater lever **(15)** to the latch bar **(16)** with two #10 lockwashers and #10-24 screws.

NOTE: The position of lever depends on enclosure depth (Figure 3).

K. Weld or rivet the door catch **(17)** to the enclosure door. User must supply the mounting hardware.

L. Attach the door latch label to the door handle on the enclosure door.

store.ips.us

Adjusting the Mechanism
If using in conjunction with the FHOH or FHOH4 Handle Operator, perform the following steps:

A. With the door in the open (unlatched) position, close the door, but do not turn the door handle. The lockout plate should latch the door partially closed.

B. Turn the handle clockwise to stop. This will engage the rollers against the enclosure flange, securing the door fully closed.

C. Check that the circuit breaker can be turned ON. If the breaker will not turn ON, adjust the interlock defeater lever downward to engage the lever on the handle operator.

D. To open the door, insert a screwdriver into the handle screw and turn the screw and handle counterclockwise. The door will only open partially if the operating handle is in the ON position. If the door fully opens with the handle in the ON position, adjust the interlock defeater lever upward and repeat Steps C and D.

NOTE: To open the door when the handle is in the ON position, turn the latch defeater screw located on the side of the operating handle.

Minimum Dimensions (In Inches)

C	1.922	**Q**	2.594
H	9.375	**R**	1.875
I	.50	**S**	1.625
J	2.688	**T**	.250
K	1.859	**U**	.688
L	1.797	**V**	.281 Dia.
M	.391 Dia.	**W**	.703 Dia.
N	2.297	**X**	2.484
P	.719	**Y**	.219 Dia.

① The last letter and number designate right- or left-hand, 2 or 3 point latches.

Courtesy of store.ips.us

Installation Diagrams

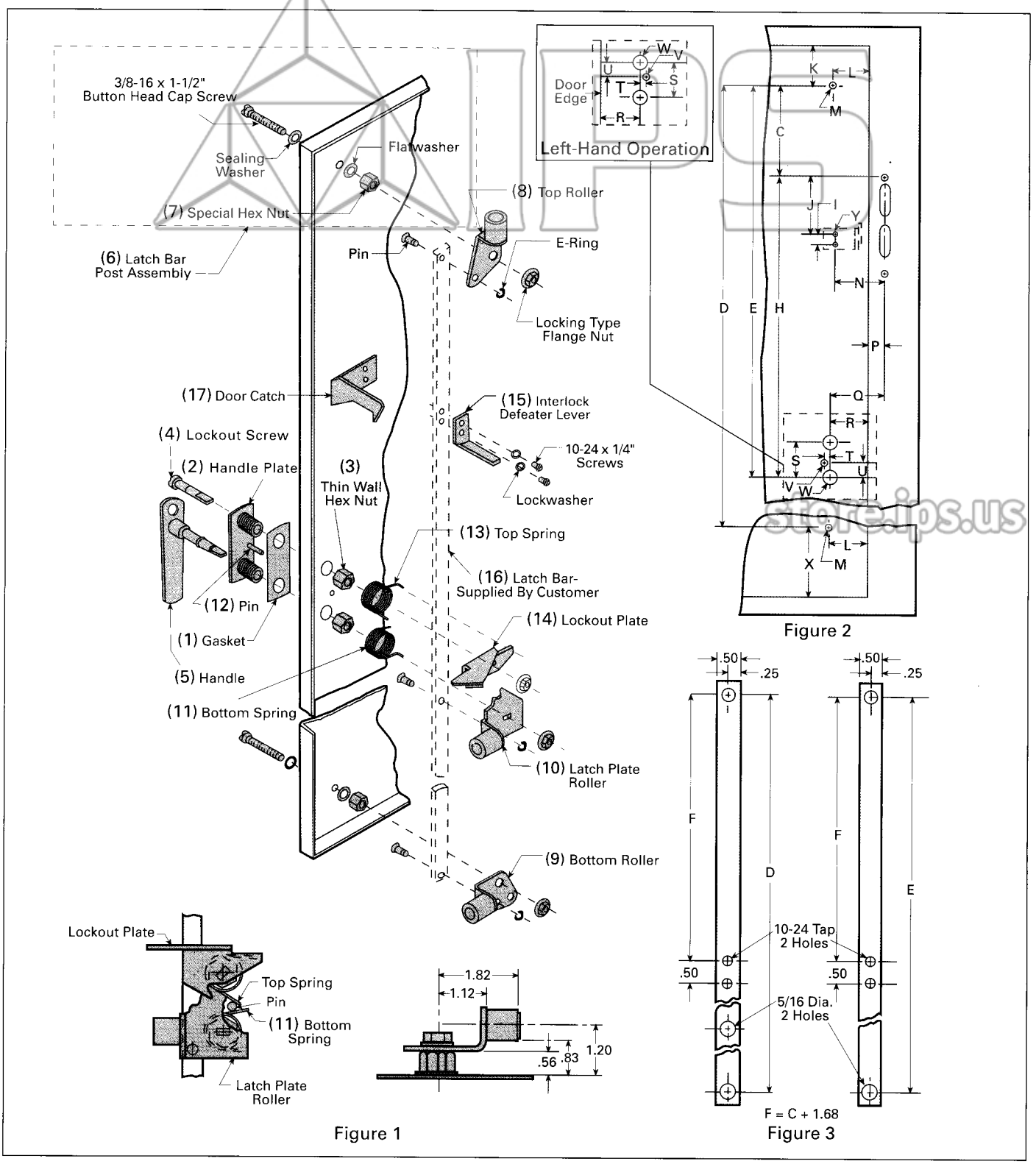

Figure 1

Figure 2

Figure 3

Courtesy of store.ips.us

Types 1, 3R

Type 1 – J6N1, LD6N1
General purpose indoor, sheet-steel enclosure for use in normal atmosphere, listed as service-entrance equipment.

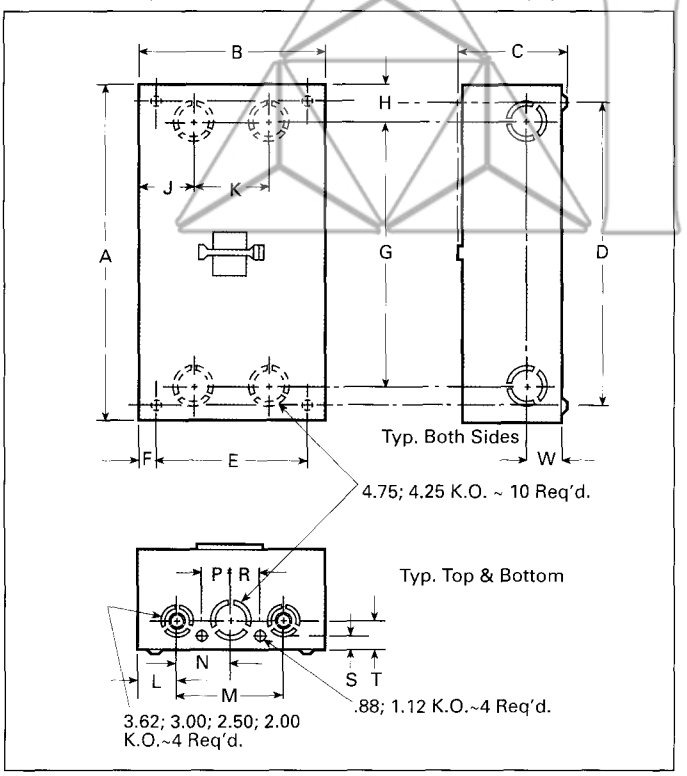

Type 3R – J6N3R, LD6N3R
An outdoor, sheet-steel enclosure providing protection against driving rain, sleet or snow. Listed as service-entrance equipment.

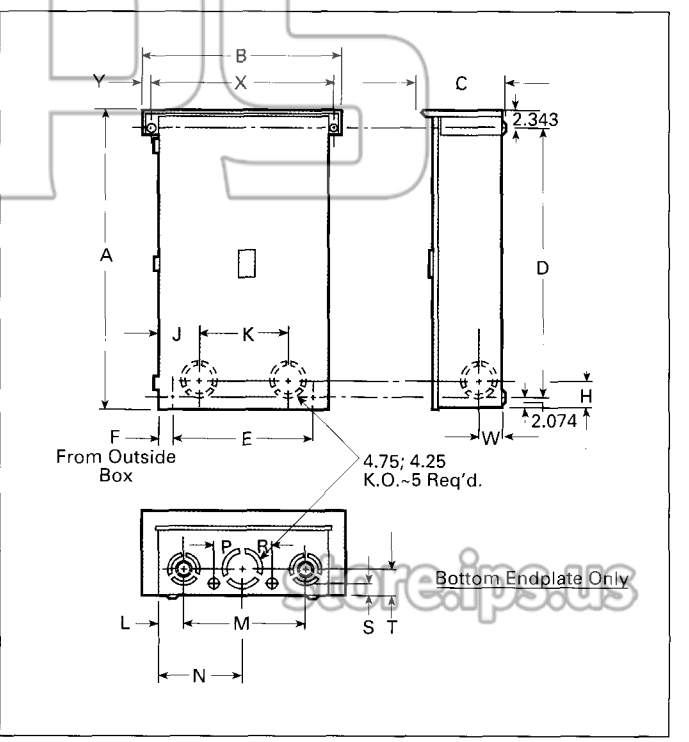

Dimensions (In Inches)

Catalog Number	Reference																			
	A	B	C	D	E	F	G	H	J	K	L	M	N	P	R	S	T	W	X	Y
J6N1	40.2	22.4	10.7	36.0	18.25	2.09	32.5	2.8	6.2	5.0	4.5	13.5	11.2	3.4	3.4	1.5	3.5	3.3	–	–
LD6N1	45.2	22.4	10.7	41.0	18.25	2.09	37.5	2.8	6.2	5.0	4.5	13.5	11.2	3.4	3.4	1.5	3.5	3.3	–	–
J6N3R	41.2	26.8	11.7	36.5	18.25	2.12	–	3.8	6.1	10.0	4.5	13.5	11.2	3.4	3.4	1.5	3.5	3.3	24.15	1.12
LD6N3R	45.2	26.8	11.7	41.5	18.25	2.12	–	3.8	6.1	10.0	4.5	13.5	11.2	3.4	3.4	1.5	3.5	3.3	24.25	1.12

Neutral Kits: JD6 Enclosures – W60992, LD6 Enclosures – W60993 (ordered as separate items – not included in enclosures)

Courtesy of store.ips.us

Types 12, 4 and 4x

Type 12 – J6N12, LD6N12
A special-industry, sheet-steel enclosure for indoor use in atmosphere containing particles of lint, dirt, sawdust and other foreign matter.

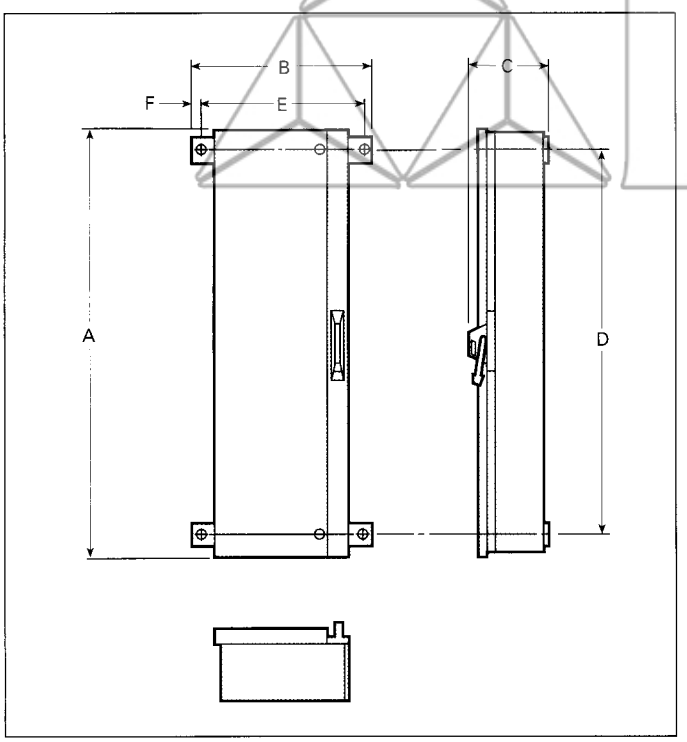

Type 4, 4x – LD6SS4
Type 304 stainless steel – an indoor or outdoor enclosure providing protection against corrosion, wind blown dust, rain, splashing water and hose directed water.

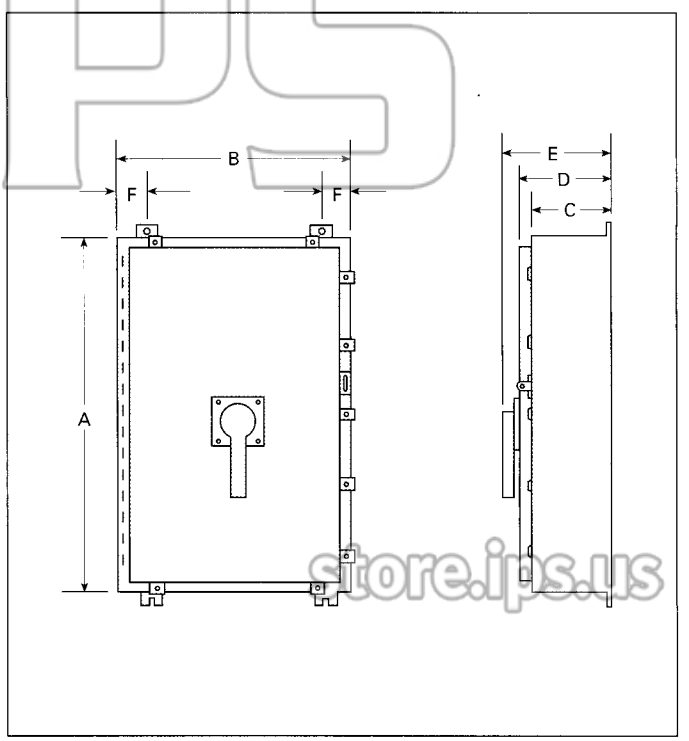

store.ips.us

Dimensions (In Inches)

Catalog Number	Reference					
	A	B	C	D	E	F
J6N12	**41.15**	**21.63**	11.62	**37.15**	**20.38**	.62
LD6N12	**46.15**	**21.63**	11.62	**42.15**	**20.38**	.62
LD6SS4	42.0	30.0	10.0	11.16	13.75	3.0

Neutral Kits: JD6 Enclosures – W60992, LD6 Enclosures – W60993
(ordered as separate items – not included in enclosures)

Courtesy of store.ips.us

Panelboard Connector Straps①

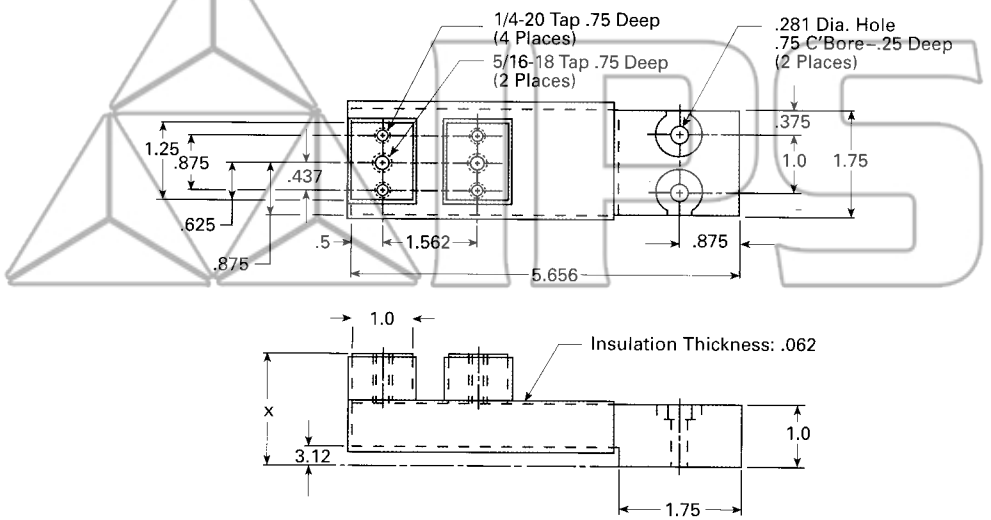

Outside Connector Strap

JD-Frame Catalog Number	LD-Frame Catalog Number	X
CS3620R	CS3624R	1.832
CS3622R	CS3626R	3.394

①These straps are not used in series 6 or 7 panelboards.

store.ips.us

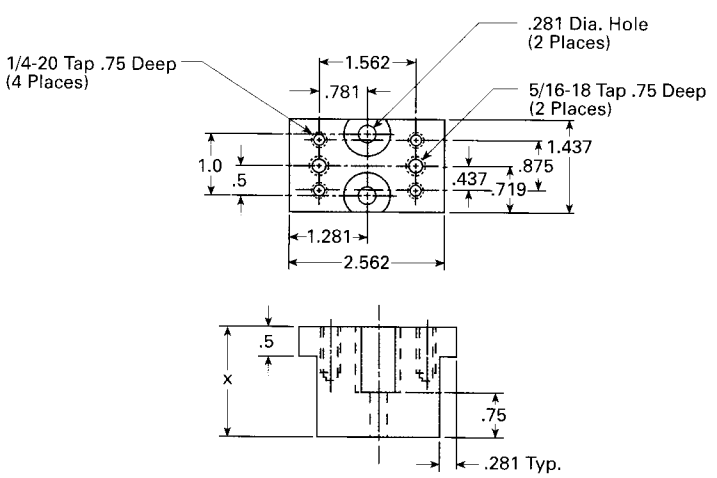

Center Connector Strap

JD-Frame Catalog Number	LD-Frame Catalog Number	X
CS3621R	CS3625R	1.832
CS3623R	CS3627R	3.394

①These straps are not used in series 6 or 7 panelboards.

Courtesy of store.ips.us

Ordering Information

Circuit Breaker Catalog Numbers

JXD2(-A) Non-interchangeable Trip

Ampere Rating	Instantaneous Trip Range		Complete 2-Pole① Breaker Unenclosed	Complete 3-Pole Breaker Unenclosed	UL Interrupting Ratings (kA)④ (RMS) Symmetrical Amperes				
	Min.	Max.	Catalog Number②⑦	Catalog Number②⑦	240Vac	480Vac	600Vac	250Vdc⑤	500Vdc⑥
200	1250	2500	JXD22B200	JXD23B200	65	N/A	N/A	30	N/A
225	1250	2500	JXD22B225	JXD23B225	65	N/A	N/A	30	N/A
250	1250	2500	JXD22B250	JXD23B250	65	N/A	N/A	30	N/A
300	1250	2500	JXD22B300	JXD23B300	65	N/A	N/A	30	N/A
350	2000	4000	JXD22B350	JXD23B350	65	N/A	N/A	30	N/A
400	2000	4000	JXD22B400	JXD23B400	65	N/A	N/A	30	N/A
400	Molded Case Switch③		JXD22S400A	JXD23S400A	65	N/A	N/A	30	N/A
SHIPPING:			17.5 lb.	19.5 lb.					

JXD6(-A) Non-interchangeable Trip

200	1250	2500	JXD62B200	JXD63B200	65	35	25	30	25
225	1250	2500	JXD62B225	JXD63B225	65	35	25	30	25
250	1250	2500	JXD62B250	JXD63B250	65	35	25	30	25
300	1250	2500	JXD62B300	JXD63B300	65	35	25	30	25
350	2000	4000	JXD62B350	JXD63B350	65	35	25	30	25
400	2000	4000	JXD62B400	JXD63B400	65	35	25	30	25
400	Molded Case Switch③		JXD62S400A	JXD63S400A	65	35	25	30	N/A
SHIPPING:			17.5 lb.	19.5 lb.					

HJXD6(-A) Non-interchangeable Trip

200	1250	2500	–	HJXD63B200	100	65	35	N/A	35
225	1250	2500	–	HJXD63B225	100	65	35	N/A	35
250	1250	2500	–	HJXD63B250	100	65	35	N/A	35
300	1250	2500	–	HJXD63B300	100	65	35	N/A	35
350	2000	4000	–	HJXD63B350	100	65	35	N/A	35
400	2000	4000	–	HJXD63B400	100	65	35	N/A	35

LXD6(-A) Non-interchangeable Trip

450	2000	4000	LXD62B450	LXD63B450	65	35	25	30	25
500	3000	6000	LXD62B500	LXD63B500	65	35	25	30	25
600	3000	6000	LXD62B600	LXD63B600	65	35	25	30	25
600	Molded Case Switch③		LXD62S600A	LXD63S600A	65	35	25	30	25
SHIPPING:			17.5 lb.	19.5 lb.					

HLXD6(-A) Non-interchangeable Trip

450	2000	4000	–	HLXD63B450	100	65	35	N/A	35
500	3000	6000	–	HLXD63B500	100	65	35	N/A	35
600	3000	6000	–	HLXD63B600	100	65	35	N/A	35

① Two-Pole available in 3-Pole width only.
② For 50°C application replace "B" letter in catalog number with the letter "M" for ordering purposes.
③ Includes self protecting instantaneous element.
④ IEC interrupting ratings are listed on page 50.
⑤ D.C. interruption rating for 2-pole construction only.
⑥ D.C. interruption rating for 3-pole construction when properly wired as shown on page 4.
⑦ For 100% application, order Non-Interchangeable Trip Breaker catalog number and add a "H" suffix letter, i.e. (HJXD63B400H) – use copper only terminal connectors.

store.ips.us

Ordering Information

Circuit Breaker Catalog Numbers

JD6(-A) Interchangeable Trip
2-Pole①

Ampere Rating	Instantaneous Trip Range		Complete Breaker Unenclosed②	Frame Only	Trip Unit Only③	UL Interrupting Ratings (kA) (RMS) Symmetrical Amperes				
	Min.	Max.	Catalog Number	Catalog Number	Catalog Number	240Vac	480Vac	600Vac	250Vdc④	500Vdc
200	1250	2500	JD62B200	JD62F400	JD62T200	65	35	25	30	N/A
225	1250	2500	JD62B225	JD62F400	JD62T225	65	35	25	30	N/A
250	1250	2500	JD62B250	JD62F400	JD62T250	65	35	25	30	N/A
300	1250	2500	JD62B300	JD62F400	JD62T300	65	35	25	30	N/A
350	2000	4000	JD62B350	JD62F400	JD62T350	65	35	25	30	N/A
400	2000	4000	JD62B400	JD62F400	JD62T400	65	35	25	30	N/A
SHIPPING:			17.5 lb.	14 lb.	3.5 lb.					

3-Pole

200	1250	2500	JD63B200	JD63F400	JD63T200	65	35	25	N/A	25
225	1250	2500	JD63B225	JD63F400	JD63T225	65	35	25	N/A	25
250	1250	2500	JD63B250	JD63F400	JD63T250	65	35	25	N/A	25
300	1250	2500	JD63B300	JD63F400	JD63T300	65	35	25	N/A	25
350	2000	4000	JD63B350	JD63F400	JD63T350	65	35	25	N/A	25
400	2000	4000	JD63B400	JD63F400	JD63T400	65	35	25	N/A	25
SHIPPING:			19.5 lb.	15.5 lb.	4 lb.					

HJD6(-A) Interchangeable Trip②
2-Pole①

200	1250	2500	HJD62B200	HJD62F400	JD62T200	100	65	35	30	N/A
225	1250	2500	HJD62B225	HJD62F400	JD62T225	100	65	35	30	N/A
250	1250	2500	HJD62B250	HJD62F400	JD62T250	100	65	35	30	N/A
300	1250	2500	HJD62B300	HJD62F400	JD62T300	100	65	35	30	N/A
350	2000	4000	HJD62B350	HJD62F400	JD62T350	100	65	35	30	N/A
400	2000	4000	HJD62B400	HJD62F400	JD62T400	100	65	35	30	N/A
SHIPPING:			17.5 lb.	14 lb.	3.5 lb.					

3-Pole

200	1250	2500	HJD63B200	HJD63F400	JD63T200	100	65	35	N/A	35
225	1250	2500	HJD63B225	HJD63F400	JD63T225	100	65	35	N/A	35
250	1250	2500	HJD63B250	HJD63F400	JD63T250	100	65	35	N/A	35
300	1250	2500	HJD63B300	HJD63F400	JD63T300	100	65	35	N/A	35
350	2000	4000	HJD63B350	HJD63F400	JD63T350	100	65	35	N/A	35
400	2000	4000	HJD63B400	HJD63F400	JD63T400	100	65	35	N/A	35
SHIPPING:			19.5 lb.	15.5 lb.	4 lb.					

① Two-Pole available in 3-Pole width only.
② For 50°C application replace "B" letter in catalog number with the letter "M" for ordering purposes.
③ If trip unit is required, replace the letter "T" with the letter "W" for ordering purposes.
④ D.C. interruption rating for 2-pole construction only.

Courtesy of store.ips.us

Ordering Information

Circuit Breaker Catalog Numbers

LD6(-A) Interchangeable Trip
2-Pole①

Ampere Rating	Instantaneous Trip Range		Complete Breaker Unenclosed	Frame Only	Trip Unit Only	UL Interrupting Ratings (kA) (RMS) Symmetrical Amperes				
	Min.	Max.	Catalog Number②	Catalog Number	Catalog Number③	240Vac	480Vac	600Vac	250Vdc④	500Vdc
250	1250	2500	LD62B250	LD62F600	JD62T250	65	35	25	30	N/A
300	1250	2500	LD62B300	LD62F600	JD62T300	65	35	25	30	N/A
350	2000	4000	LD62B350	LD62F600	JD62T350	65	35	25	30	N/A
400	2000	4000	LD62B400	LD62F600	JD62T400	65	35	25	30	N/A
450	2000	4000	LD62B450	LD62F600	LD62T450	65	35	25	30	N/A
500	3000	6000	LD62B500	LD62F600	LD62T500	65	35	25	30	N/A
600	3000	6000	LD62B600	LD62F600	LD62T600	65	35	25	30	N/A
SHIPPING:			17.5 lb.	14 lb.	3.5 lb.					

3-Pole

250	1250	2500	LD63B250	LD63F600	JD63T250	65	35	25	N/A	25
300	1250	2500	LD63B300	LD63F600	JD63T300	65	35	25	N/A	25
350	2000	4000	LD63B350	LD63F600	JD63T350	65	35	25	N/A	25
400	2000	4000	LD63B400	LD63F600	JD63T400	65	35	25	N/A	25
450	2000	4000	LD63B450	LD63F600	LD63T450	65	35	25	N/A	25
500	3000	6000	LD63B500	LD63F600	LD63T500	65	35	25	N/A	25
600	3000	6000	LD63B600	LD63F600	LD63T600	65	35	25	N/A	25
SHIPPING:			19.5 lb.	15.5 lb.	4 lb.					

HLD6(-A) Interchangeable Trip②④
2-Pole①

250	1250	2500	HLD62B250	HLD62F600	JD62T250	100	65	35	30	N/A
300	1250	2500	HLD62B300	HLD62F600	JD62T300	100	65	35	30	N/A
350	2000	4000	HLD62B350	HLD62F600	JD62T350	100	65	35	30	N/A
400	2000	4000	HLD62B400	HLD62F600	JD62T400	100	65	35	30	N/A
450	2000	4000	HLD62B450	HLD62F600	LD62T450	100	65	35	30	N/A
500	3000	6000	HLD62B500	HLD62F600	LD62T500	100	65	35	30	N/A
600	3000	6000	HLD62B600	HLD62F600	LD62T600	100	65	35	30	N/A
SHIPPING:			17.5 lb.	14 lb.	3.5 lb.					

3-Pole

250	1250	2500	HLD63B250	HLD63F600	JD63T250	100	65	35	N/A	35
300	1250	2500	HLD63B300	HLD63F600	JD63T300	100	65	35	N/A	35
350	2000	4000	HLD63B350	HLD63F600	JD63T350	100	65	35	N/A	35
400	2000	4000	HLD63B400	HLD63F600	JD63T400	100	65	35	N/A	35
450	2000	4000	HLD63B450	HLD63F600	LD63T450	100	65	35	N/A	35
500	3000	6000	HLD63B500	HLD63F600	LD63T500	100	65	35	N/A	35
600	3000	6000	HLD63B600	HLD63F600	LD63T600	100	65	35	N/A	35
SHIPPING:			19.5 lb.	15.5 lb.	4 lb.					

① Two-Pole available in 3-Pole width only.
② For 50°C application replace "B" letter in catalog number with the letter "M" for ordering purposes.
③ If trip unit is required, replace the letter "T" with the letter "W" for ordering purposes.
④ D.C. interruption rating for 2-pole construction only.

Courtesy of store.ips.us

Ordering Information

Circuit Breaker Catalog Numbers

HHJD6 Interchangeable Trip
2-Pole①

Ampere Rating	Instantaneous Trip Range		Complete Breaker Unenclosed	Frame Only	Trip Unit Only	UL Interrupting Ratings (kA) (RMS) Symmetrical Amperes				
	Min.	Max.	Catalog Number②	Catalog Number	Catalog Number③	240Vac	480Vac	600Vac	250Vdc	500Vdc
200	1250	2500	HHJD62B200	HHJD62F400	JD62T200	200	100	50	N/A	N/A
225	1250	2500	HHJD62B225	HHJD62F400	JD62T225	200	100	50	N/A	N/A
250	1250	2500	HHJD62B250	HHJD62F400	JD62T250	200	100	50	N/A	N/A
300	1250	2500	HHJD62B300	HHJD62F400	JD62T300	200	100	50	N/A	N/A
350	2000	4000	HHJD62B350	HHJD62F400	JD62T350	200	100	50	N/A	N/A
400	2000	4000	HHJD62B400	HHJD62F400	JD62T400	200	100	50	N/A	N/A
SHIPPING:			17.5 lb.	14 lb.	3.5 lb.					

3-Pole

200	1250	2500	HHJD63B200	HHJD63F400	JD63T200	200	100	50	N/A	N/A
225	1250	2500	HHJD63B225	HHJD63F400	JD63T225	200	100	50	N/A	N/A
250	1250	2500	HHJD63B250	HHJD63F400	JD63T250	200	100	50	N/A	N/A
300	1250	2500	HHJD63B300	HHJD63F400	JD63T300	200	100	50	N/A	N/A
350	2000	4000	HHJD63B350	HHJD63F400	JD63T350	200	100	50	N/A	N/A
400	2000	4000	HHJD63B400	HHJD63F400	JD63T400	200	100	50	N/A	N/A
SHIPPING:			19.5 lb.	15.5 lb.	4 lb.					

HHLD6 Interchangeable Trip
2-Pole①

250	1250	2500	HHLD62B250	HHLD62F600	JD62T250	200	100	50	N/A	N/A
300	1250	2500	HHLD62B300	HHLD62F600	JD62T300	200	100	50	N/A	N/A
350	2000	4000	HHLD62B350	HHLD62F600	JD62T350	200	100	50	N/A	N/A
400	2000	4000	HHLD62B400	HHLD62F600	JD62T400	200	100	50	N/A	N/A
450	2000	4000	HHLD62B450	HHLD62F600	HHLD62T450	200	100	50	N/A	N/A
500	3000	6000	HHLD62B500	HHLD62F600	HHLD62T500	200	100	50	N/A	N/A
600	3000	6000	HHLD62B600	HHLD62F600	HHLD62T600	200	100	50	N/A	N/A
SHIPPING:			17.5 lb.	14 lb.	3.5 lb.					

HHLD6 Interchangeable Trip
3-Pole

250	1250	2500	HHLD63B250	HHLD63F600	JD63T250	200	100	40	N/A	N/A
300	1250	2500	HHLD63B300	HHLD63F600	JD63T300	200	100	50	N/A	N/A
350	2000	4000	HHLD63B350	HHLD63F600	JD63T350	200	100	50	N/A	N/A
400	2000	4000	HHLD63B400	HHLD63F600	JD63T400	200	100	50	N/A	N/A
450	2000	4000	HHLD63B450	HHLD63F600	HHLD63T450	200	100	50	N/A	N/A
500	3000	6000	HHLD63B500	HHLD63F600	HHLD63T500	200	100	50	N/A	N/A
600	3000	6000	HHLD63B600	HHLD63F600	HHLD63T600	200	100	50	N/A	N/A
SHIPPING:			19.5 lb.	15.5 lb.	4 lb.					

① Two-Pole available in 3-Pole width only.
② For 50°C application replace "B" letter in catalog number with the letter "M" for ordering purposes.
③ If trip unit is required, replace the letter "T" with the letter "W" for ordering purposes.

store.ips.us

Ordering Information

Circuit Breaker Catalog Numbers

CJD6 Non-interchangeable Trip⑤

Ampere Rating	Instantaneous Trip Range		Complete 2-Pole① Breaker Unenclosed	Complete 3-Pole① Breaker Unenclosed	UL Interrupting Ratings (kA) (RMS) Symmetrical Amperes				
	Min.	Max.	Catalog Number②	Catalog Number②	240Vac	480Vac	600Vac	250Vdc	500Vdc
200	1250	2500	CJD62B200	CJD63B200	200	150	100	30	N/A
225	1250	2500	CJD62B225	CJD63B225	200	150	100	30	N/A
250	1250	2500	CJD62B250	CJD63B250	200	150	100	30	N/A
300	1250	2500	CJD62B300	CJD63B300	200	150	100	30	N/A
350	2000	4000	CJD62B350	CJD63B350	200	150	100	30	N/A
400	2000	4000	CJD62B400	CJD63B400	200	150	100	30	N/A
400	Molded Case Switch③		CJD62S400A	CJD63S400A	200	150	100	30	N/A
SHIPPING:			29.5 lb.	31.5 lb.					

CLD6 Non-interchangeable Trip⑤

450	2000	4000	CLD62B250	CLD63B450	200	150	100	30	N/A
500	3000	6000	CLD62B500	CLD63B500	200	150	100	30	N/A
600	3000	6000	CLD62B600	CLD63B600	200	150	100	30	N/A
600	Molded Case Switch③		CLD62S600A	CLD63S600A	200	150	100	30	N/A
SHIPPING:			29.5 lb.	31.5 lb.					

Instantaneous Trip (Motor Circuit Protectors)

Ampere Rating	Complete Breaker Unenclosed Catalog Number				Instantaneous Trip Range	
	JXD6-ETI, 2-Pole①	JXD6-ETI, 3-Pole	CJD6-ETI, 2-Pole①	CJD6-ETI, 3-Pole	Minimum	Minimum
400, Low	JXD62L400	JXD63L400	CJD62L400	CJD63L400	1250	2500
400, High	JXD62H400	JXD63H400	CJD62H400	CJD63H400	2000	4000
SHIPPING:	16 lb.	20 lb.	29.5 lb.	31.5 lb.		

Amperes	LXD6-ETI, 2-Pole①	LXD6-ETI, 3-Pole	CLD6-ETI, 2-Pole①	CLD6-ETI, 3-Pole	Minimum	Minimum
600, Low	LXD62L600	LXD63L600	CLD62L600	CLD63L600	2000	4000
600, High	LXD62H600	LXD63H600	CLD62H600	CLD63H600	3000	6000
SHIPPING:	16 lb.	20 lb.	29.5 lb.	31.5 lb.		

IEC 947-2 Interrupting Ratings (kA)

Ampere Rating	Breaker Frame	Breaker Type	220/240 Volts (Icu)	220/240 Volts (Ics)	380/415 Volts (Icu)	380/415 Volts (Ics)	500 Volts (Icu)	500 Volts (Ics)
400	JD	JXD2(A)	–	–	–	–	–	–
		JXD6(A)	65	33	40	20	30	15
		JD6(A)	65	33	40	20	30	15
		HJD6(A)	100	50	65	33	42	21
		HJXD6(A)	100	50	65	33	42	21
		HHJD6	200	100	100	50	65	33
		HHJXD6	200	100	100	50	65	33
		CJD6④	200	–	150	–	–	–
600	LD	LXD6(A)	65	33	40	20	30	15
		LD6(A)	65	33	40	20	30	15
		HLD6(A)	100	50	65	33	42	21
		HLXD6(A)	100	50	65	33	42	21
		HHLD6(A)	200	100	100	50	65	33
		HHLXD6	200	100	100	50	65	33
		CLD6④	200	–	150	–	–	–

① Two-Pole available in 3-pole width only.
② For 50°C application replace "B" letter in catalog number with the letter "M" for ordering purposes.
③ Includes self protecting instantaneous element.
④ Meets and Marked IEC 157-1 P1.

Courtesy of store.ips.us

Ordering Information

Internal Accessory Combination

Shunt Trip

Control Voltage		1 Shunt Trip	1 Shunt Trip and 1 Auxiliary Switch
AC	DC	Catalog Number	Catalog Number
12		S19JLD6	S19JLD62A
24		S17JLD6	S17JLD62A
48		S18JLD6	S18JLD62A
120		S01JLD6	S01JLD62A
208		S02JLD6	S02JLD62A
240		S03JLD6	S03JLD62A
277		S15JLD6	S15JLD64A
480		S04JLD6	S04JLD64A
600		S06JLD6	N/A
	12	S16JLD6	S16JLD62A
	24	S07JLD6	S07JLD62A
	48	S09JLD6	S09JLD62A
	125	S11JLD6	S11JLD62A
	250	S13JLD6	S13JLD62A

Undervoltage Trip

Control Voltage		1 Undervoltage Trip	1 Undervoltage Trip and 1 Auxiliary Switch	1 Undervoltage Trip and 2 Auxiliary Switches
AC	DC	Catalog Number	Catalog Number	Catalog Number
120		U01JLD6	U01JLD62A	U01JLD62AA
208		U02JLD6	U02JLD62A	U02JLD62AA
240		U03JLD6	U03JLD62A	U03JLD62AA
277		U16JLD6	U16JLD64A	U16JLD64AA
480		U06JLD6	U06JLD64A	U06JLD64AA
600		U08JLD6	N/A	N/A
	24	U13JLD6	U13JLD62A	U13JLD62AA
	48	U14JLD6	U14JLD62A	U14JLD62AA
	125	U10JLD6	U10JLD62A	U10JLD62AA
	250	U12JLD6	U12JLD62A	U12JLD62AA

Auxiliary Switch

Control Voltage		1 Auxiliary Switch	2 Auxiliary Switches
AC	DC	Catalog Number	Catalog Number
120		A01JLD64	A02JLD64
208		A01JLD64	A02JLD64
240		A01JLD64	A02JLD64
277		A01JLD64	A02JLD64
480		A01JLD64	A02JLD64
	24	A01JLD64	A02JLD64
	48	A01JLD64	A02JLD64
	125	A01JLD64	A02JLD64
	250	A01JLD64	A02JLD64

Bell Alarm Switch

Control Voltage		1 Alarm Switch	1 Alarm Switch and 1 Auxiliary Switch	1 Alarm Switch and 2 Auxiliary Switches
AC	DC	Catalog Number	Catalog Number	Catalog Number
120		B01JLD64	A01JLD64B	A02JLD64B
208		B01JLD64	A01JLD64B	A02JLD64B
240		B01JLD64	A01JLD64B	A02JLD64B
277		B01JLD64	A01JLD64B	A02JLD64B
480		B01JLD64	A01JLD64B	A02JLD64B
	24	B01JLD64	A01JLD64B	A02JLD64B
	48	B01JLD64	A01JLD64B	A02JLD64B
	125	B01JLD64	A01JLD64B	A02JLD64B
	250	B01JLD64	A01JLD64B	A02JLD64B

Note: Accessory modules can mount in either left hand or right hand poles of all JD and LD-Frame circuit breakers.

storeUPS.us

Ordering Information

Additional Accessories

Item	Catalog No.
Pressure Wire Connectors	
(1-2) #3/0-500 MCM (Cu)	TA2J6500
(1-2) #4/0-500 MCM (Al)	
(1) 500-750 MCM (Al)	TA1L6750
(1) #500-600 MCM (Cu)	
(1) #3/0-600 MCM (Cu)	TC1J6600
(1-2) #3/0-500 MCM (Cu)	TC2J6500
Compression Connector	CCL600
Handle Blocking Device	JD6HBL
Padlocking Device	JD6HPL
Rear Connecting Studs	
JD-Frame Long	RS5774
Short	RS5774
LD-Frame Long	RS5783
Short	RS5784
Plug-In Adaptors	
JD-Frame (2-Pole)	PC5777
(3-Pole)	PC5778
LD-Frame (2-Pole)	PC5660
(3-Pole)	PC5661
Switchboard Mounting Plates	
CJD6/CLD6 Breaker Types	PL5297
All Other Types	PL5796
Mechanical Interlock	
Panel Mounted	MI5413
Rotary Handle Operator	
Variable Depth	D11CJU2
Rotary Handle Operators	
Complete Mechanism	
Standard Depth	CRHOJSD
Variable Depth	CRHOJVD
Handle	CRHOH①
Breaker Operator	RHOJBO
Shaft	
Standard Depth Shaft	RHOSSD
Variable Depth Shaft	RHOSVD
Flange Mount Handle Operator	
Complete Mechanism	FHOJ036
Handle	FHOH②
Breaker Operator	FHOJBO
Standard Cable (36 in.)	FHOJC036
Optional Cable (48 in.)	FHOJC048
Door Latch Mechanisms	
Left Side	DKL2, DKL3
Right Side	DKR2, DKR3

① For 4-4x application, order RHOH4 instead of RHOH.
② For 4-4x application, order FHOH4 instead of FHOH.

Item	Catalog No.
Motor Operators	
120Vac (Hinged to the right)	MOJ6120
120Vac (Hinged to the left)	MOJ6120L
240Vac (Hinged to the right)	MOJ6240
240Vac (Hinged to the left)	MOJ6240L
Connector Straps	
Outside Strap	
JD-Frame	CS3620R
	CS3622R
LD-Frame	CS3624R
	CS3626R
Center Strap	
JD-Frame	CS3621R
	CS3623R
LD-Frame	CS3625R
	CS3627R
Mounting Screw Kits	MSJ6④
Enclosures	
JD-Frame	
Type 1	J6N1
Type 3R	J6N3R
Type 12	J6N12
Type 4X	LD6SS4
LD-Frame	
Type 1	LD6N1
Type 3R	LD6N3R
Type 12	LD6N12
Type 4X	LD6SS4
Time Current Curves	
JD-Frame	
Types JXD2, JXD6, JD6, HJD6	TD-7104
Types CJD6	TD-7105
LD-Frame	
Types LXD6, LD6, HLD6	TD-7106
Types CLD6	TD-7107
Left-Thru Curves	
JD-Frame	
Peak Current (I_p)	TD-7105-A
I^2t	TD-7105-B
LD-Frame	
Peak Current (I_p)	TD-7107-A
I^2t	TD-7107-B

④ Consists of 4 screws and assorted washers and/or nuts.

store.ips.us

Courtesy of store.ips.us

Ordering Information

UL Listings, File Numbers and Specifications

UL Listings and File Numbers

Siemens Item	UL-489 File Number	CSA Report Number
Breakers	E10848	LR13077
Terminal Connectors	E23615 (SP)③	
Plug-In Connectors	E23615	
Rear Studs	E23615	
Handle Operators	E57501	
Motor Operators	E57501	
Internal Accessories	E69455	LR13077
Shunt Trip		
Undervoltage Trip		
Aux. Switch		
Bell Alarm Switch		
Mechanical Interlock		
Molded Case Switch	E68312	LR42022
Enclosures	E10848	
ETI Breakers	E10848	LR42022

③ For CSA application use TC2J6500 or TC1J6600 connectors.

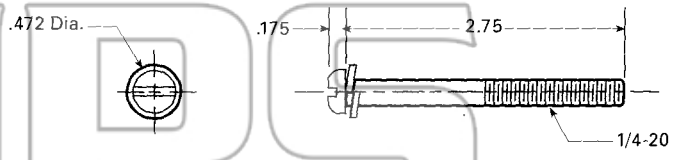

Industry Specifications

National Fire Protection Assoc. (National Electrical Code®).

Federal Specification W-C-375B/GEN.

Underwriters Laboratories, Inc. (UL 489).

Canadian Standards Association (C22.2 No. 5).

NEMA AB-1 – 1986

Field Test Procedures NEMA AB-4 – 1991

store.ips.us



store.ips.us

Siemens Energy & Automation, Inc.
Power Distribution & Controls Division
3333 Old Milton Parkway
Alpharetta, GA 30005

For Nearest Sales Office
1-800-964-4114 or 800-241-4453
www.sea.siemens.com/sales/salesoffices.html

For Product Information
www.sea.siemens.com/power/

Courtesy of store.ips.us