

TEI ROCK DRILLS

MP260

PORTABLE DRILL SYSTEM

The MP Portable drilling platform is designed to reach the most difficult access areas of the jobsite. Coupled with TEI's quality lightweight components it builds a powerful and dependable machine for most all limited access work.

The MP platform becomes a very versitle tool for any contractor. The ability to install hollow bar/micropiles in any location give the contractor unlimited possibilities for profit. The MP drill hasbeen a staple of limited access drilling for many years at TEI.



PORTABLE DRILL SYSTEM

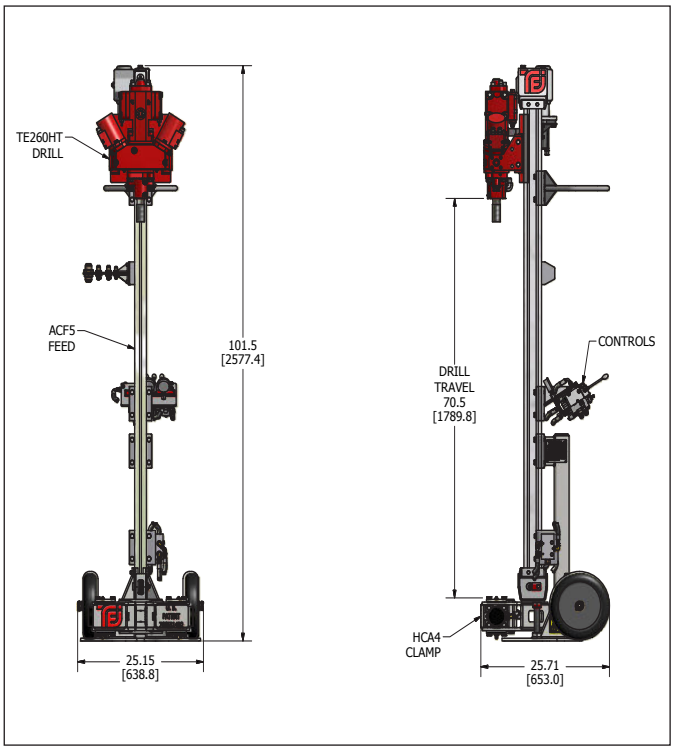

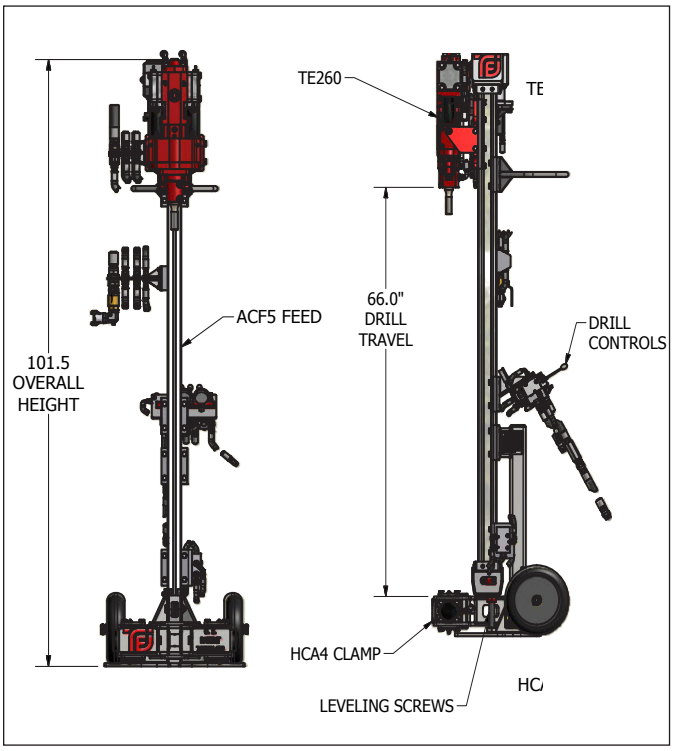

SPECIFICATIONS

	U.S.	Metric
PULLBACK FORCE	1500 lbf	6672 N
TOTAL LENGTH	101.5 inches	2.57 m
DRILL TRAVEL	66 inches	1.67 m

MP WITH TE260HT DRIFTER

	U.S.	Metric
HYDRAULIC FLOW	38 gpm	144 lpm
HYDRAULIC PRESSURE	2250 psi	155 bar
HOLE SIZE	1 3/8” to 2 1/2”	35 mm- 64 mm
TORQUE	1000 lbf-ft	1351 Nm
OUTPUT POWER	13 hp	10 kW
BLOWS PER MINUTE	4200	4200
APPROX. WEIGHT	700 lbs	318 kgs

MP WITH RDS250 ROTARY

	U.S.	Metric
HYDRAULIC FLOW	20 gpm	76 lpm
HYDRAULIC PRESSURE	2500 psi	172 bar
HOLE SIZE	2 3/4” to 4”	70 mm- 102 mm
TORQUE	1000 lbf-ft	1631 Nm
OUTPUT POWER	13 hp	10 kW
BLOWS PER MINUTE	4200	4200
APPROX. WEIGHT	626 lbs	284 kgs

Specifications subject to change without notice.
TEI technical specifications consider a 40% hydraulic power loss.

QUALITY POLICY

CONTINUAL IMPROVEMENT OF CUSTOMER VALUE THROUGH INNOVATION, EFFICIENCY AND INTEGRITY

TEI08.046.B
REV 03/19/2021