SIEMENS

Data sheet 3VA5816-6EC31-0AA0



circuit breaker 3VA5 UL frame 1600 breaking capacity class H 65kA @ 480 V 3-pole, line protection TM230, FTAM, In=1600A overload protection Ir=1600A fixed short circuit protection Ii=5 - 7,5 x In w/o connection

Model	
product brand name	SENTRON
product designation	Molded-case circuit breaker
product designation / according to UL file	HPAS
design of the product	System protection
design of the load switch / according to UL 489 / Heating, Air Conditioning, and Refrigeration circuit breaker (HACR Type)	Yes
design of the overcurrent release	TM230
protection function of the overcurrent release	LI
number of poles	3
General technical data	
insulation voltage / rated value	800 V
operating voltage / at DC / rated value	750 V
operating voltage / at AC / rated value	600 V
power loss [W] / maximum	423 W
power loss [W] / for rated value of the current / at AC / in hot operating state / per pole	423 W
mechanical service life (operating cycles) / typical	3 000
electrical endurance (operating cycles) / at AC-1 / at 380/415 V	1 500
electrical endurance (operating cycles) / at AC-1 / at 690 V	500
electrical endurance (operating cycles) / at 480 V	1 500
electrical endurance (operating cycles) / at 600 V	500
product feature / for neutral conductors / upgradable/retrofittable / short-circuit and overload proof	No
product function	
● communication function	No
● phase failure detection	No
● other measurement function	No
Net Weight	24.74 kg
Current	
marking / according to UL 489 / 100%-rated breaker	No
operational current	
● at 40 °C	1 600 A
● at 45 °C	1 577 A
● at 50 °C	1 554 A
● at 55 °C	1 531 A
● at 60 °C	1 508 A
● at 65 °C	1 485 A
● at 70 °C	1 462 A
Switching capacity according to IEC 60947	
switching capacity class of the circuit breaker	H

Subject to change without notice
© Copyright Siemens

maximum short-circuit current breaking capacity (Icu)	
● at 240 V	110 kA
● at 415 V	70 kA
● at 690 V	30 kA
operating short-circuit current breaking capacity (Ics)	
● at 240 V	55 kA
● at 415 V	35 kA
● at 690 V	15 kA
short-circuit current making capacity (Icm)	
● at 240 V	242 kA
● at 415 V	154 kA
● at 690 V	63 kA
design of short-circuit protection	For switching power values in DC networks, see the 3VA molded case circuit breaker device manual; link to be found under Service & Support in the last chapter
Switching capacity according to UL 489	
current breaking capacity	
● at 240 V	100 kA
● at 480 V	65 kA
● at 600 Y/347 V	35 kA
● at 600 V	35 kA
Adjustable parameters	
adjustable response value setting current (Ir) / of the L-trip / with I2t characteristic	
● minimum	1 600 A
● maximum	1 600 A
adjustable response value delay time (tr) / for L-tripping / with I2t characteristic	
● minimum	1 s
● maximum	1 s
adjustable response value setting current (Ii) / for I-tripping	
● minimum	7 000 A
● maximum	12 000 A
product function / grounding protection	No
Mechanical Design	
product component	
● undervoltage release	No
● trip indicator	No
height [in]	8.14 in
height	207 mm
width [in]	8.99 in
width	228.4 mm
depth [in]	16 in
depth	406.4 mm
Connections	
type of electrical connection / for main current circuit	without terminals
design of the surface / of the connections / on the top of the switch (N, 1, 3, 5)	silver
design of the surface / of the connections / on the bottom of the switch (N, 2, 4, 6)	silver
Auxiliary circuit	
number of CO contacts / for auxiliary contacts	0
Environmental conditions	
protection class IP / on the front	IP40
ambient temperature	
● during operation / minimum	-25 °C
● during operation / maximum	70 °C
● during storage / minimum	-40 °C
● during storage / maximum	80 °C
reference code / according to IEC 81346-2	F
Approvals / Certificates	
General Product Approval	

Subject to change without notice
© Copyright Siemens

Confirmation

General Product Approval	EMV	Test Certificates	Marine / Shipping

Miscellaneous

Type Test Certificates/Test Report

other	Environment

Miscellaneous Confirmation Miscellaneous

Environmental Confirmations

Further information

Information on the packaging
https://support.industry.siemens.com/cs/ww/en/view/109813875
Information- and Downloadcenter (Catalogs, Brochures,…)
http://www.siemens.com/lowvoltage/catalogs
Industry Mall (Online ordering system)
https://mall.industry.siemens.com/mall/en/en/Catalog/product?mlfb=3VA5816-6EC31-0AA0
Service&Support (Manuals, Certificates, Characteristics, FAQs,...)
https://support.industry.siemens.com/cs/ww/en/ps/3VA5816-6EC31-0AA0
Image database (product images, 2D dimension drawings, 3D models, device circuit diagrams, ...)
http://www.automation.siemens.com/bilddb/cax_en.aspx?mlfb=3VA5816-6EC31-0AA0
CAx-Online-Generator
http://www.siemens.com/cax
Tender specifications
http://www.siemens.com/specifications

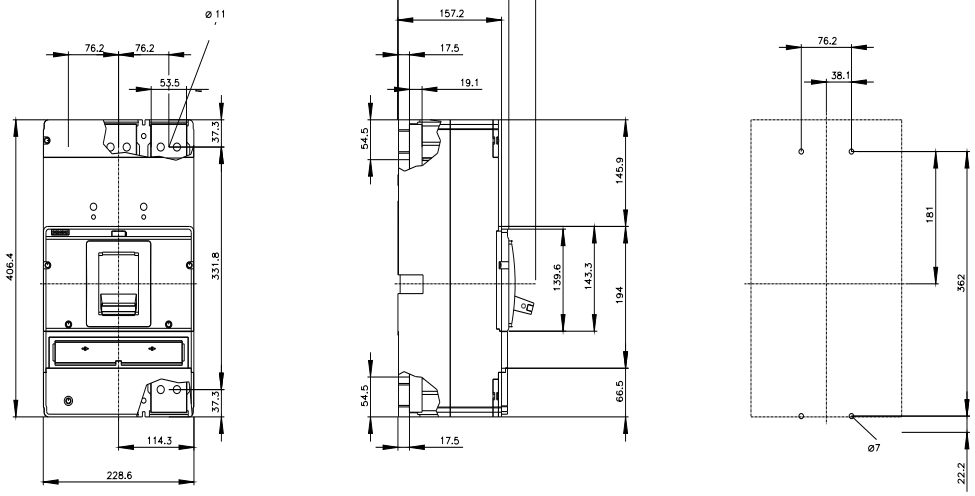

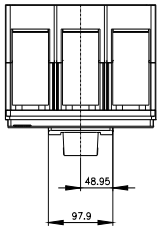

Subject to change without notice
© Copyright Siemens

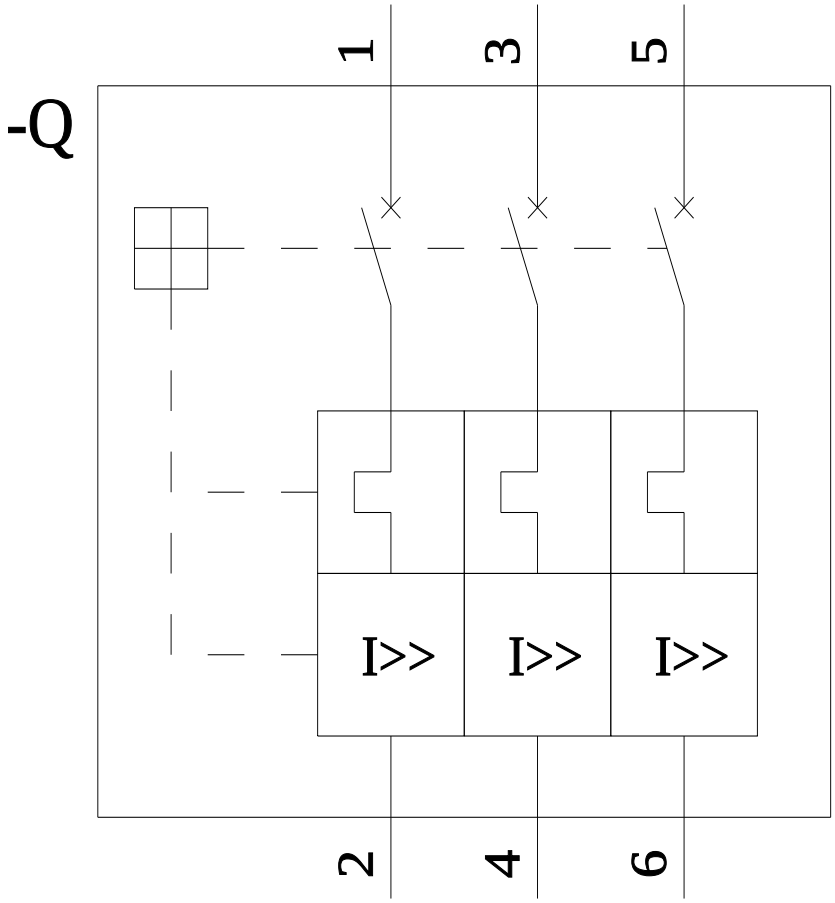

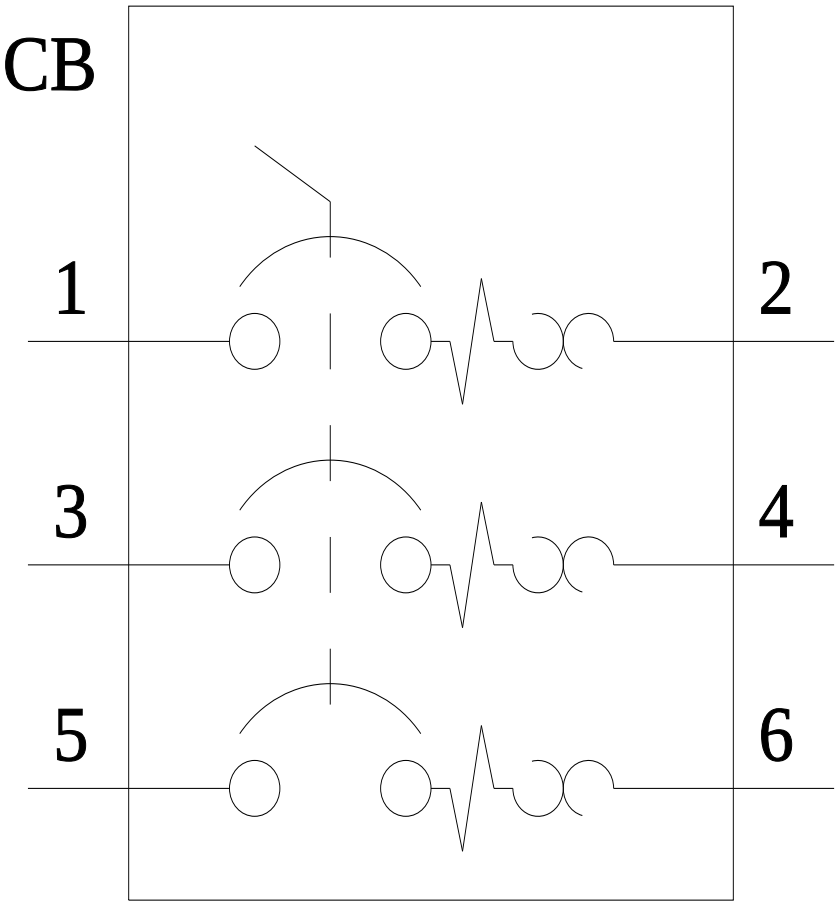

last modified: 11/22/2024

Subject to change without notice
© Copyright Siemens

Subject to change without notice
© Copyright Siemens