SIEMENS

Data Sheet

VBII Heavy Duty Safety Switch

30A, 240 – 600V, Type 3R

usa.siemens.com/switches



Standards and Ratings

- UL Listed under file #E4776
- Meets UL98 for switches and UL 50 for enclosures
- Meets NEMA Standard KS-1 for enclosed switches
- Meets NEC wire bending space requirements
- Rated 10,000 AIC with Class H fuses or 200,000 AIC with Class R and J fuses
- Rated 100,000 AIC at 600Vdc with Class R or J fuses
- I^2t rated (Amps^2 x Seconds = 50,000)
- 12X overload current rating exceeds 10X industry standard
- Suitable for use as service entrance equipment
- Includes internal shields which meet NEC 2020 230.62 line side barrier requirements

Features

- Quick-make and break switching action
- Double break visible blade design
- Highly visible ON/OFF indication
- Rugged installer friendly enclosure design
- Modular design allows quick and easy replacement of parts
- Front removable lugs which can easily be converted to copper body or compression type lugs
- Defeatable dual cover interlock

Product Specifications

Heavy Duty 30A, 240 - 600V Type 3R

General Information

Catalog Number	Volts	Description	Shipping Weight (lbs.)
HF221NR [1]	240	2 Pole, 3 Wire, Fusible	13
HF321NR	240	3 Pole, 4 Wire, Fusible	15
HF261R	600	2 Pole, 2 Wire, Fusible	15
HF361R	600	3 Pole, 3 Wire, Fusible	15
HF361NR	600	3 Pole, 4 Wire, Fusible	15

Horsepower Ratings [2, 3] – 240 Volts

Catalog Number	1 Phase, 240V AC		3 Phase, 240V AC		250V DC
	Std	Max	Std	Max	
HF221NR	1½	3	3	7½	15
HF321NR	1½	3	3	7½	15

Horsepower Ratings [2, 3, 4] – 600 Volts

Catalog Number	3 Phase, 480V AC		3 Phase, 600V AC		600V DC
	Std	Max	Std	Max	
HF261R	—	— [5]	—	— [5]	15
HF361R	5	15	7½	20	—
HF361NR	5	15	7½	20	—

Mechanical Lug Wire Range (60/75°C, Cu/Al)

Description	Wire Range
Line, Load, Neutral	#12-6 AWG (Al) or #14-6 AWG (Cu)
Ground	#14-4 AWG

Accessories

Catalog Number	Description
HA161234	One Normally Open and Closed Auxiliary Switches
HA261234	Two Normally Open and Closed Auxiliary Switches
HA361234	Low Voltage Auxiliary Switch
HG61234	Equipment Ground Lug Kit
HG261234	Isolated Equipment Ground Lug Kit
HP61	Fuse Puller (3 per kit)
HN612	Neutral Kit
HR21	240 Volt Class R Fuse Clip Kit (3 fuse clips per kit) (HF221NR, HF321NR)
HR612	600 Volt Class R Fuse Clip Kit (3 fuse clips per kit) (HF261R, HF361R, HF361NR)
HLC612	Copper Lug Kit (9 lugs per kit)
HCL612	Compression Lug Neutral Barrier Kit
HS075	0.75" Type "HS" Outdoor Hub
HS100	1.00" Type "HS" Outdoor Hub

Replacement Parts

Catalog Number	Description
HFB21	240 Volt Line Side Replacement Base (HF221NR, HF321NR)
HBB21	240 Volt Load Side Replacement Base (HF221NR, HF321NR)
HFB612	600 Volt Line Side Replacement Base (HF261R, HF361R, HF361NR)
HBB612	600 Volt Load Side Replacement Base (HF261R, HF361R, HF361NR)
HH6123	Legacy Larger Replacement Handle/Handle Guard
HH6123A	Replacement Handle/Handle Guard
HL612	Replacement Lugs (3 lugs per kit)
HM6123S	Replacement Mechanism
[6]	Replacement Door

NOTE: Legacy style handle phased out in 2021. "How can I tell?" Order the legacy handle if the red handle grip is attached with screw. The new style grip is pressed onto the metal handle and does not require a screw.

Compression Lugs [7]

Wire Size	Burndy		Thomas-Betts		Ilsco	
	CU Only	CU/AL	CU Only	CU/AL	CU Only	CU/AL
#14-10	—	—	—	60096 60097	—	—
#8	YA8C-L BOX YA8C-L1 BOX	—	54104 54130	60101 60102 61102	CRA-8	ACL-8 ACN-8
#6	—	—	—	61107	—	—

1 These switches are UL Listed for application on grounded B phase systems.
2 Dual horsepower ratings: Std - applies when non-time delay fuses are installed.
Max - applies when time-delay fuses are installed.
3 Horsepower ratings listed also apply to Design E motors with no derating.
4 Also rated 5HP at 250V DC.
5 Also rated 7½ HP at 480V, 1 phase and 10HP at 600V, 1 phase.
6 Place "DOOR" at the end of the switch catalog number.
7 If compression lugs are used for the neutral, order compression lug neutral barrier kit HCL612.

Dimension Drawings

Heavy Duty 30A, 240 - 600V Type 3R

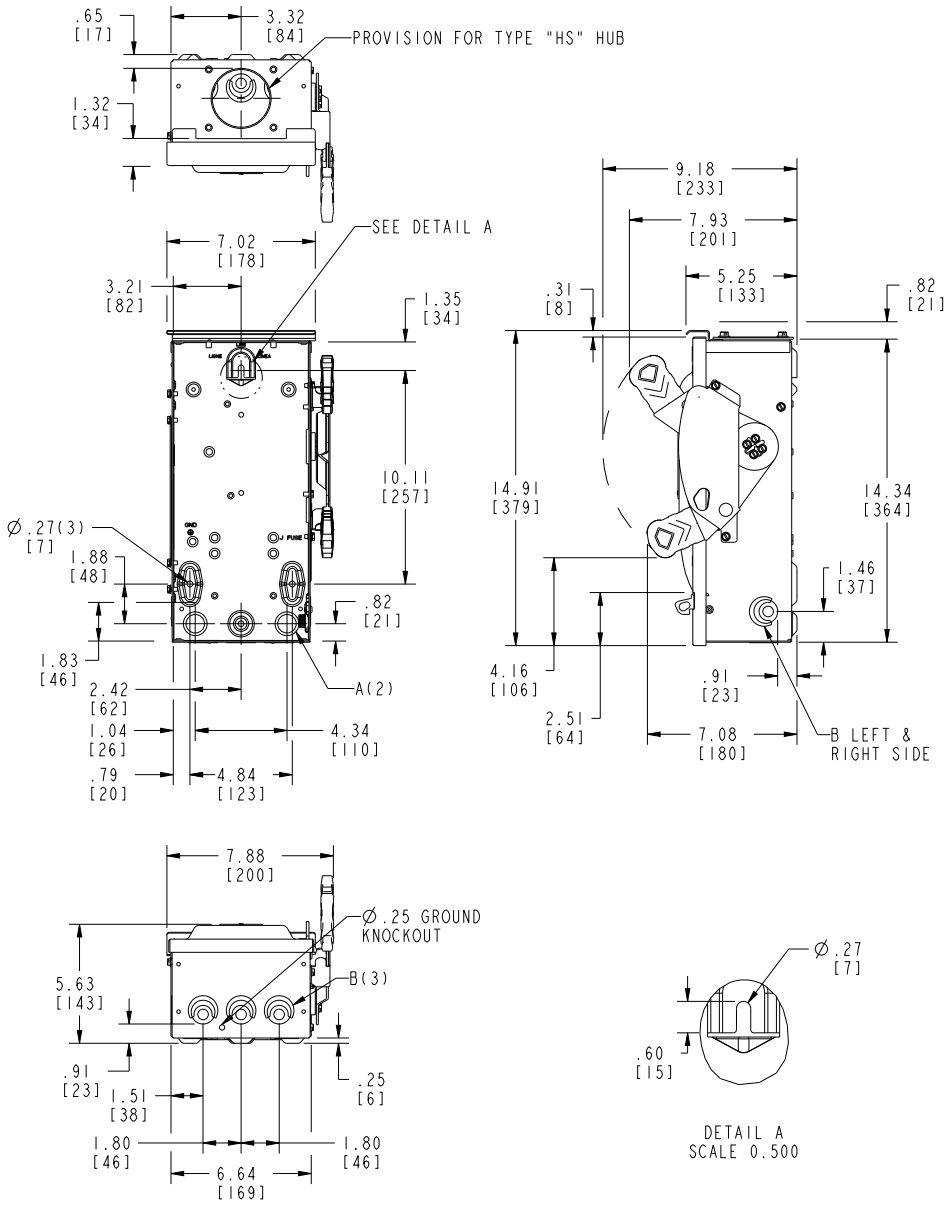

KNOCKOUT CODE	CONDUIT CODE
A (Concentric)	.75 1.00
B (Tangential)	.50 .75 1.00

	LINE SIDE WIRE BEND	LOAD SIDE WIRE BEND
240V	3.02 (77)	5.36 (136)
600V	3.02 (77)	2.61 (66)

Dimensions shown in inches and millimeters ( ).
Dimension shown accurate to ± ⅛ inch.

Enclosure: Galvanized Steel
.054 Thick (17 Gauge)
Finish: ANSI Grey #61 Paint)

Published by
Siemens Industry, Inc. 2021.

Siemens Industry, Inc.
3617 Parkway Ln
Peachtree Corners, GA 30092

For more information, please contact
our Customer Support Center.
Phone: 1-800-241-4453
E-mail: info.us@siemens.com

usa.siemens.com/switches

Order No.: SSDS-HF33R-0521
Printed in U.S.A.
© 2021 Siemens Industry, Inc.

The technical data presented in this document is based on an actual case or on as-designed parameters, and therefore should not be relied upon for any specific application and does not constitute a performance guarantee for any projects. Actual results are dependent on variable conditions. Accordingly, Siemens does not make representations, warranties, or assurances as to the accuracy, currency or completeness of the content contained herein. If requested, we will provide specific technical data or specifications with respect to any customer's particular applications. Our company is constantly involved in engineering and development. For that reason, we reserve the right to modify, at any time, the technology and product specifications contained herein.