DATA SHEET

# VBII Heavy Duty
# Solar Photovoltaic Switches

## 60A – 600V DC, Type 3R

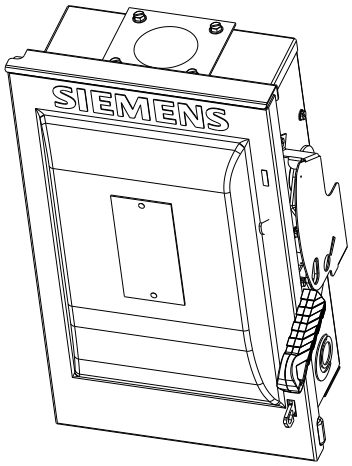


### Standards and Ratings

- UL Listed and specifically designedand tested for use with three separate 600V DC circuits
- Specific catalog numbers are available for use with negative and for positive ground system
- Switches comply with UL98 requirements and are UL listed in file number E335018 as UL1741Photovoltaic Disconnect switches
- Door labeling as required by Article 690 of the NEC supplied as standard
- Rated 10,000 AIC when protected by Class K, J or R fuses rated at 600V DC
- UL approved for field installation of optional copper body and crimp type terminals
- Includes internal shields which meet NEC 2020 230.62 line side barrier requirements

### Features

- Innovative magnetic arc suppression incorporated into the line base
- Quick-make and break switching action
- Double break visible blade design
- Highly visible ON/OFF indication
- Rugged installer friendly enclosure design
- Front removable line and load lugs which can easily be converted to copper body or compression type lugs
- Defeatable dual cover interlock
- Ground bar factory installed as standard
- Two and 3 point mounting provisions are standard
- Large wire gutters and oversized lugs allow for larger cables to minimize voltage drop on long cable runs

SIEMENS

# Product Specifications

## Type VBII, 60 Amp, Type 3R (Outdoor)

### General Information

| Catalog Number | Volts DC | Description | Shipping Weight (lbs.) | Rated Isc per NEC Article 690 |
|---|---|---|---|---|
| **Negative Ground** | | | | |
| HF362RPV | 600 | 3 Pole, 3 Wire, Fusible | 19 | 38.4A |
| HNF362RPV | 600 | 3 Pole, 3 Wire, Non-Fusible | 18 | 48.0A |
| **Positive Ground** | | | | |
| HF362RPVPG | 600 | 3 Pole, 3 Wire, Fusible | 19 | 38.4A |
| HNF362RPVPG | 600 | 3 Pole, 3 Wire, Non-Fusible | 18 | 48.0A |

### Mechanical Lug Wire Range (60/75°C, Cu/Al)

| Description | Wire Range |
|---|---|
| Line, Load, Neutral | #12-2 AWG Al or 14-2 AWG (Cu) |
| Ground | #14-4 AWG |

### Accessories

| Catalog Number | Description |
|---|---|
| HA161234 | One Normally Open and Closed Auxiliary Switches |
| HA261234 | Two Normally Open and Closed Auxiliary Switches |
| HA361234 | Low Voltage Auxiliary Switch |
| HG261234 | Isolated Equipment Ground Lug Kit |
| HF62 | Fuse Puller (3 per kit) |
| HN623 | Neutral Kit |
| HR62 | 600 Volt Class R Fuse Clip Kit (3 fuse clips per kit) |
| HLC612 | Copper Lug Kit (9 lugs per kit) |
| HCL623 | Compression Lug Neutral Barrier Kit |
| ECH5075 | 0.75" Type "HS" Outdoor Hub |
| ECH5100 | 1.00" Type "HS" Outdoor Hub |
| EC5125 | 1.25" Type "HS" Outdoor Hub |

### Replacement Parts

| Catalog Number | Description |
|---|---|
| HBB62 | Fusible 600 Volt Load Side Replacement Base |
| HH6123[1] | Legacy (larger sized) Handle/Handle Guard |
| HH6123A | Replacement Handle/Handle Guard |
| HL612 | Replacement Lugs (3 lugs per kit) |
| HM6123 | Replacement Mechanism |

### Compression Lugs

| Wire Size | Burndy | | Thomas-Betts | | Ilsco | |
|---|---|---|---|---|---|---|
| | CU Only | CU/AL | CU Only | CU/AL | CU Only | CU/AL |
| #14-10 | — | — | 256-30695-1352 | 60097 | — | — |
| #8 | YA8C-L Box<br>YA8C-TC14 | YA8CA3 | 54130<br>54930BE | 60102<br>61102 | — | ACL-8 |
| #6 | YA6C-L Box<br>YA6C | YA6CA1 | 54105<br>54905BE | 60107<br>61107 | CRB-6<br>CRB-6L | ACL-6 |
| #4 | — | — | 54106 | 61112 | CRB-4 | — |

[1] Legacy style handle phased out in 2021.
FAQ: "How can I tell?" Inspect the red handle grip. If the red handle grip is attached with screw, order the legacy kit.
The new style grip is pressed onto the metal handle and does not require a screw.

# Wiring Diagrams

**For negative ground PV systems HF362PV**

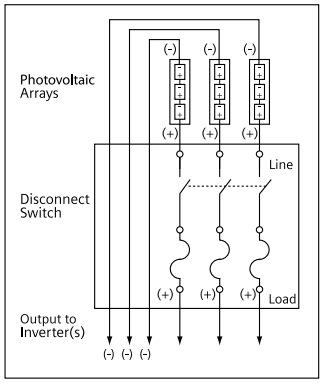


**HNF362PV**

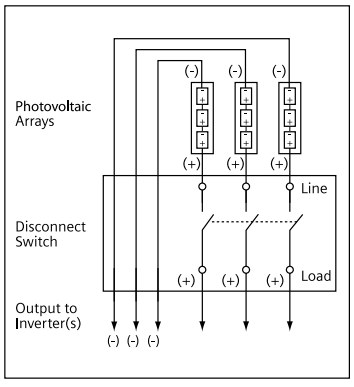


**For positive ground PV systems HF362PVPG**

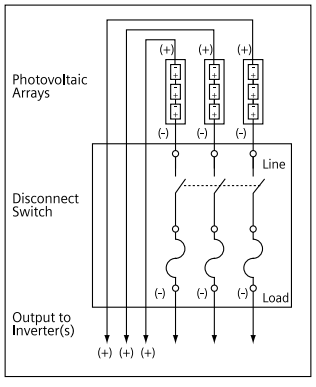


**HNF362PVPG**

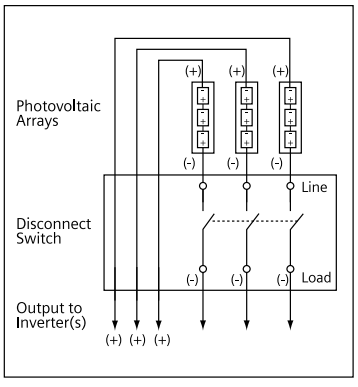

# Dimension Drawings

## Type VBII, 60 Amp, Type 3R

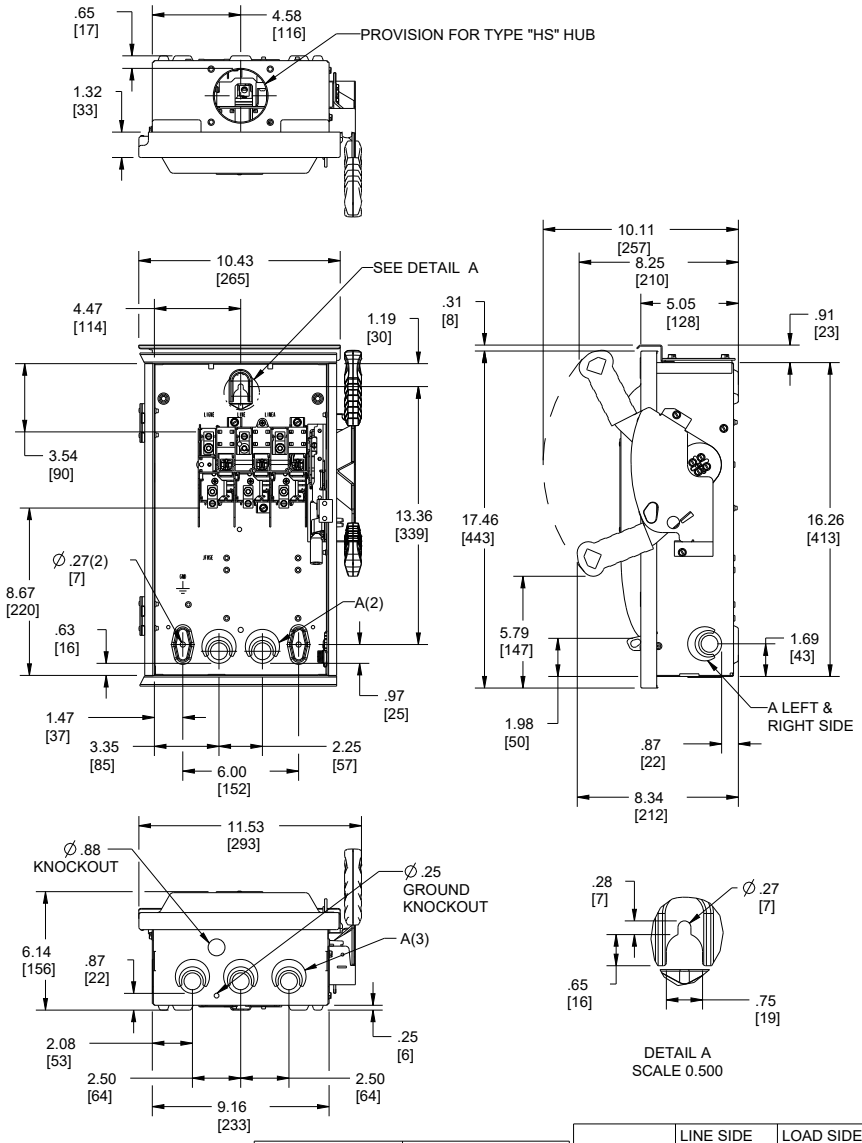


| KNOCKOUT CODE | CONDUIT SIZE |
|---|---|
| A (Tangential) | .50 .75 1.00 1.25 |

| | LINE SIDE WIRE BEND | LOAD SIDE WIRE BEND |
|---|---|---|
| Non-Fused | 3.54 (90) | 8.68 (220) |

Enclosure:
Galvanized Steel
.054 Thick (17 Gauge)
Finish: ANSI Grey #61 Paint

**Published by**
Siemens Industry, Inc.
3617 Parkway Lane
Peachtree Corners, GA 30092
United States of America

Phone: 1-800-333-7421
usa.siemens.com/switches

Order No.: SSDS-HF6RP-0825
Printed in U.S.A.

© 2025 Siemens Industry, Inc.

This document contains a general description of available technical options only, and its effectiveness will be subject to specific variables including field conditions and project parameters. Siemens does not make representations, warranties, or assurances as to the accuracy or completeness of the content contained herein. Siemens reserves the right to modify the technology and product specifications in its sole discretion without advance notice.

SIEMENS