SIEMENS

Data sheet 3VA6325-1MS31-0AA0

circuit breaker 3VA6 UL frame 400 3-pole, starter protection ETU310M, I, In=250A without overload protection short-circuit protection Ii=3...15 x In without connection



Model	
Product brand name	SENTRON
Product designation	Molded-case circuit breaker
Product designation / according to UL file	CJAR
Product version	Starter protection
Design of the load switch / acc. to UL 489 / Heating, Air Conditioning, and Refrigeration circuit breaker (HACR Type)	Yes
Design of the overcurrent release	ETU310M
Protective function of the overcurrent release	I
Number of poles	3

General technical data	
Rated insulation voltage Ui	600 V
Max. rated operational voltage Ue with AC 50/60Hz	600 V
Power loss [W] / maximum	27.3 W
Active power loss / for rated value of the current / at AC / in hot operating state / per pole	9.1 W
Mechanical service life (switching cycles) / typical	15 000

Subject to change without notice
© Copyright Siemens

Electrical endurance (switching cycles) / at AC-1 / at 380/415 V 50/60 Hz	6 000
Electrical endurance (switching cycles) / at AC-1 / at 690 V 50/60 Hz	4 000
Electrical endurance (switching cycles) / at 480 V / at 50/60 Hz	6 000
Electrical endurance (switching cycles) / at 600 V / at 50/60 Hz	6 000
Neutral conductors / upgradeable/retrofittable	No
Ground fault monitoring version	Without
Product function	
• communication function	No
• Phase failure detection	No
• other measurement function	No

Current

Marking / acc. to UL 489 / 100%-rated breaker	No
Max. rated operational current of the frame size	400 A
Rated continuous current Iu	250 A
Operating current	
• at 40 °C	250 A
• at 45 °C	250 A
• at 50 °C	250 A
• at 55 °C	250 A
• at 60 °C	250 A
• at 65 °C	250 A
• at 70 °C	250 A

Adjustable parameters

Adjustable response value current / Ii min.	750 A
Adjustable response value current / Ii max.	3 750 A
Ground fault protection / tripping switchable / I2t=ON/OFF	No

Mechanical Design

Height [in]	9.8 in
Height	248 mm
Width [in]	5.4 in
Width	138 mm
Depth [in]	4.3 in
Depth	110 mm

Connections

Arrangement of electrical connectors / for main current circuit	Without connection
Type of electrical connection / for main current circuit	Without

Subject to change without notice
© Copyright Siemens

Auxiliary circuit

Number of CO contacts / for auxiliary contacts	0

Accessories

Product extension / optional / motor drive	Yes

Environmental conditions

Protection class IP / on the front	IP40
Ambient temperature	
• during operation / minimum	-25 °C
• during operation / maximum	70 °C
• during storage / minimum	-40 °C
• during storage / maximum	80 °C

Certificates

Reference code / acc. to DIN EN 81346-2	Q
Certificate of suitability / as approval for NAVAL (no combat vessels) / Supplement SB	Yes

General Product Approval

CCC CSA UL UL VDE EAC

EMC	Declaration of Conformity	Shipping Approval		other
RCM	EG-Konf.	ABS	LRS	Miscellaneous

Further information

Information- and Downloadcenter (Catalogs, Brochures,…)
http://www.siemens.com/lowvoltage/catalogs

Industry Mall (Online ordering system)
https://mall.industry.siemens.com/mall/en/en/Catalog/product?mlfb=3VA6325-1MS31-0AA0

Service&Support (Manuals, Certificates, Characteristics, FAQs,...)
https://support.industry.siemens.com/cs/ww/en/ps/3VA6325-1MS31-0AA0

Image database (product images, 2D dimension drawings, 3D models, device circuit diagrams, ...)
http://www.automation.siemens.com/bilddb/cax_en.aspx?mlfb=3VA6325-1MS31-0AA0

CAx-Online-Generator
http://www.siemens.com/cax

Tender specifications
http://www.siemens.com/specifications

Subject to change without notice
© Copyright Siemens

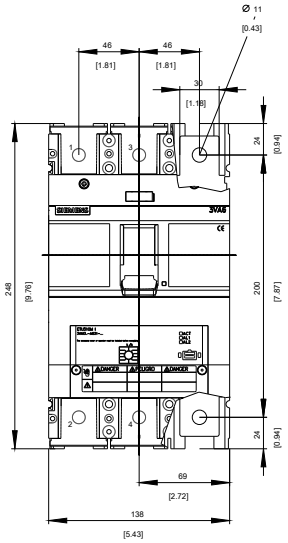

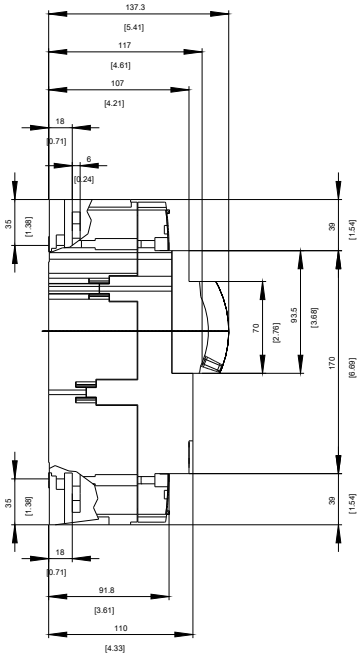

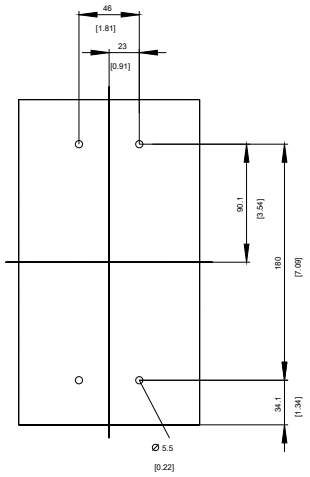

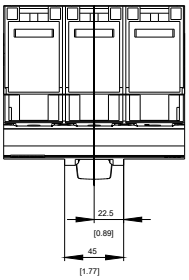

© Copyright Siemens

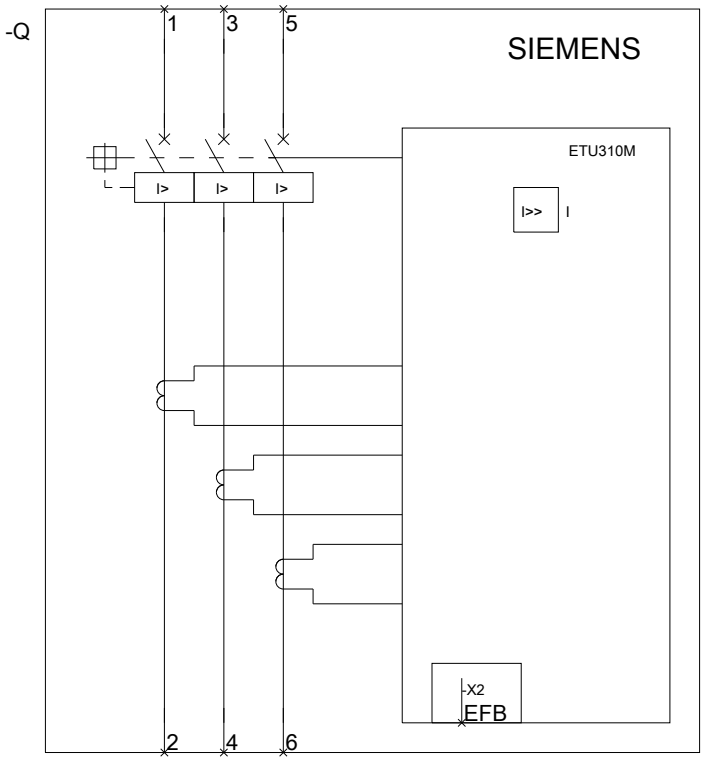

Siemens

\fArial Unicode MS

Format / Size: Hybrid d

Subject to change without notice
© Copyright Siemens

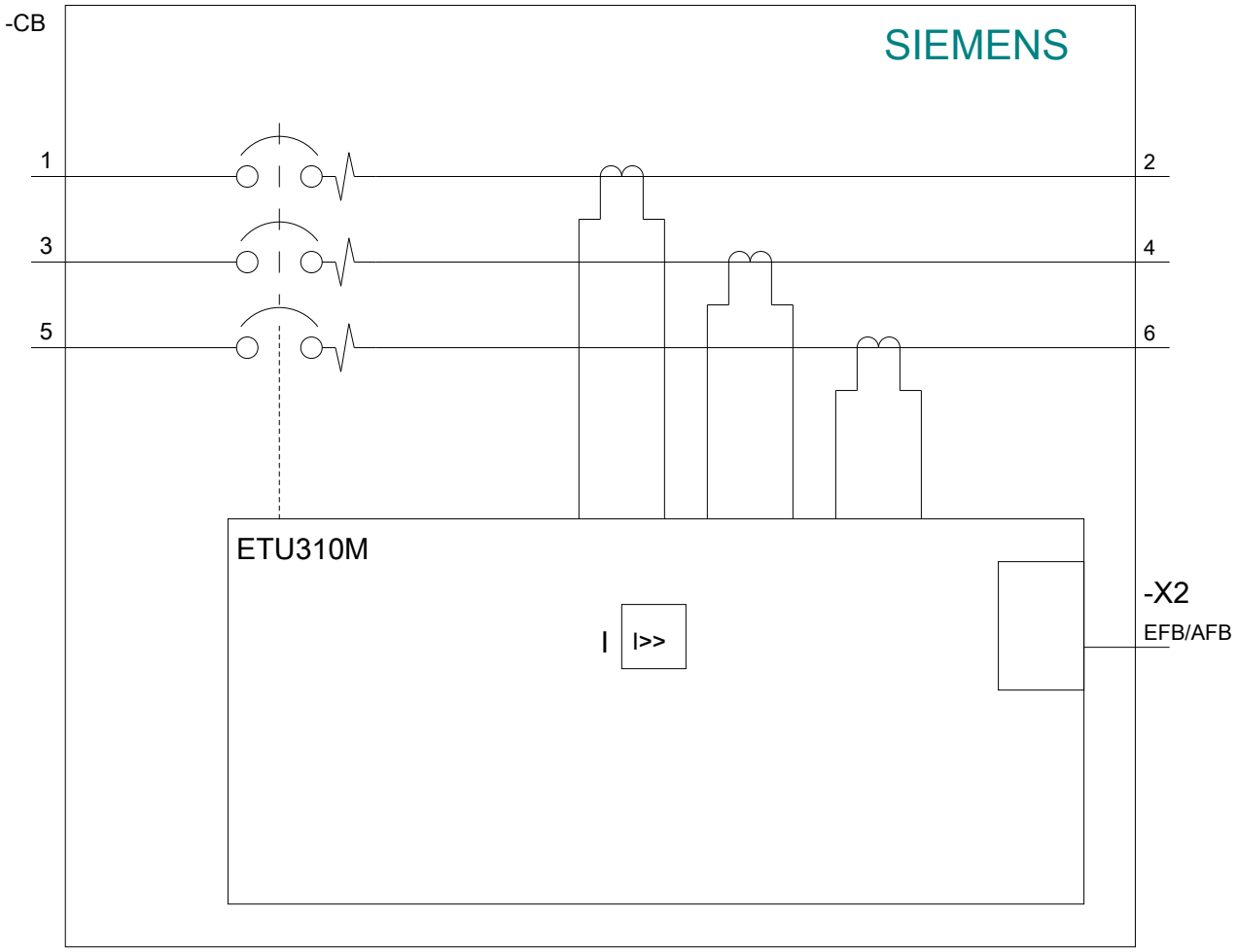

Subject to change without notice
© Copyright Siemens

last modified: 04/08/2020

Subject to change without notice
© Copyright Siemens