SIEMENS



SIMATIC

S7-1500

Digital input module DI 16x24VDC HF (6ES7521-1BH00-0AB0)

Manual

Edition 04/2015

Answers for industry.

SIEMENS

SIMATIC

S7-1500/ET 200MP DI 16x24VDC HF Digital Input Module (6ES7521-1BH00-0AB0)

Manual

Preface

Documentation guide 1

Product overview 2

Wiring 3

Parameters/address space 4

Interrupts/diagnostics alarms 5

Technical specifications 6

Dimensional drawing A

Parameter data records B

Open Source Software C

04/2015

A5E03485952-AE

Legal information

Warning notice system

This manual contains notices you have to observe in order to ensure your personal safety, as well as to prevent damage to property. The notices referring to your personal safety are highlighted in the manual by a safety alert symbol, notices referring only to property damage have no safety alert symbol. These notices shown below are graded according to the degree of danger.

⚠ DANGER

indicates that death or severe personal injury **will** result if proper precautions are not taken.

⚠ WARNING

indicates that death or severe personal injury **may** result if proper precautions are not taken.

⚠ CAUTION

indicates that minor personal injury can result if proper precautions are not taken.

NOTICE

indicates that property damage can result if proper precautions are not taken.

If more than one degree of danger is present, the warning notice representing the highest degree of danger will be used. A notice warning of injury to persons with a safety alert symbol may also include a warning relating to property damage.

Qualified Personnel

The product/system described in this documentation may be operated only by **personnel qualified** for the specific task in accordance with the relevant documentation, in particular its warning notices and safety instructions. Qualified personnel are those who, based on their training and experience, are capable of identifying risks and avoiding potential hazards when working with these products/systems.

Proper use of Siemens products

Note the following:

⚠ WARNING

Siemens products may only be used for the applications described in the catalog and in the relevant technical documentation. If products and components from other manufacturers are used, these must be recommended or approved by Siemens. Proper transport, storage, installation, assembly, commissioning, operation and maintenance are required to ensure that the products operate safely and without any problems. The permissible ambient conditions must be complied with. The information in the relevant documentation must be observed.

Trademarks

All names identified by ® are registered trademarks of Siemens AG. The remaining trademarks in this publication may be trademarks whose use by third parties for their own purposes could violate the rights of the owner.

Disclaimer of Liability

We have reviewed the contents of this publication to ensure consistency with the hardware and software described. Since variance cannot be precluded entirely, we cannot guarantee full consistency. However, the information in this publication is reviewed regularly and any necessary corrections are included in subsequent editions.

Siemens AG
Division Digital Factory
Postfach 48 48
90026 NÜRNBERG
GERMANY

A5E03485952-AE
℗ 04/2015 Subject to change

Copyright © Siemens AG 2013 - 2015.
All rights reserved

Preface

Purpose of the documentation

This manual supplements the system manual for the S7-1500, ET 200MP.

Functions that relate in general to the systems are described in these system manuals.

The information provided in this manual and in the system/function manuals supports you in commissioning the systems.

Changes compared to previous version

Compared to the previous version, this manual contains the following change:

As an option, channel 0 and channel 1 can be used for counting as of firmware version V2.1.0 of the module

If channels 0 and 1 are used for counting, channels 2 to 15 can continue to be used as digital inputs.

Conventions

CPU: The term "CPU" is used in this manual both for the CPUs of the S7-1500 automation system, as well as for interface modules of the ET 200MP distributed I/O system.

STEP 7: In this documentation, "STEP 7" is used as a synonym for all versions of the configuration and programming software "STEP 7 (TIA Portal)".

DI mode: DI 16x24VDC HF as digital input module with 16 digital inputs (channels 0 to 15).

Counting mode: DI 16x24VDC HF as digital input module with 2 counters (channels 0 and 1) and 14 digital inputs (channels 2 to 15).

Please also observe notes marked as follows:

Note

A note contains important information regarding the product described in the documentation or its handling, or draws special attention to a section of the documentation.

Security information

Siemens provides products and solutions with industrial security functions that support the secure operation of plants, solutions, machines, equipment and/or networks. They are important components in a holistic industrial security concept. With this in mind, Siemens' products and solutions undergo continuous development. Siemens recommends strongly that you regularly check for product updates.

For the secure operation of Siemens products and solutions, it is necessary to take suitable preventive action (e.g. cell protection concept) and integrate each component into a holistic, state-of-the-art industrial security concept. Third-party products that may be in use should also be considered. You can find more information about industrial security on the Internet (http://www.siemens.com/industrialsecurity).

To stay informed about product updates as they occur, sign up for a product-specific newsletter. You can find more information on the Internet (http://support.automation.siemens.com).

Open Source Software

Open-source software is used in the firmware of the product described. Open Source Software is provided free of charge. We are liable for the product described, including the open-source software contained in it, pursuant to the conditions applicable to the product. Siemens accepts no liability for the use of the open source software over and above the intended program sequence, or for any faults caused by modifications to the software.

For legal reasons, we are obliged to publish the original text of the license conditions and copyright notices. Please read the information relating to this in the appendix.

Table of contents

Preface **4**

1 Documentation guide **7**

2 Product overview **9**

2.1 Properties 9

2.2 Functions 11
2.2.1 Count 11

3 Wiring **13**

4 Parameters/address space **15**

4.1 Parameter 15
4.1.1 Parameters 15
4.1.2 Parameters DI mode 16
4.1.3 Explanation of the parameters of the DI mode 17
4.1.4 Parameters of the Counting mode 18
4.1.5 Explanation of the parameters of the Counting mode 20

4.2 Address space 22
4.2.1 Address space DI mode 23
4.2.2 Address space Counting mode 27
4.2.3 Examples of counting 31

5 Interrupts/diagnostics alarms **36**

5.1 Status and error displays 36

5.2 Interrupts 38

5.3 Diagnostics alarms 40

6 Technical specifications **41**

A Dimensional drawing **45**

B Parameter data records **47**

B.1 Parameter assignment and structure of the parameter data records 47

B.2 Structure of the parameter data records DI mode 48

B.3 Structure of the parameter data records Counting mode 50

C Open Source Software **53**

Documentation guide

1

The documentation for the SIMATIC S7-1500 automation system and the SIMATIC ET 200MP distributed I/O system is arranged into three areas.
This arrangement enables you to access the specific content you require.

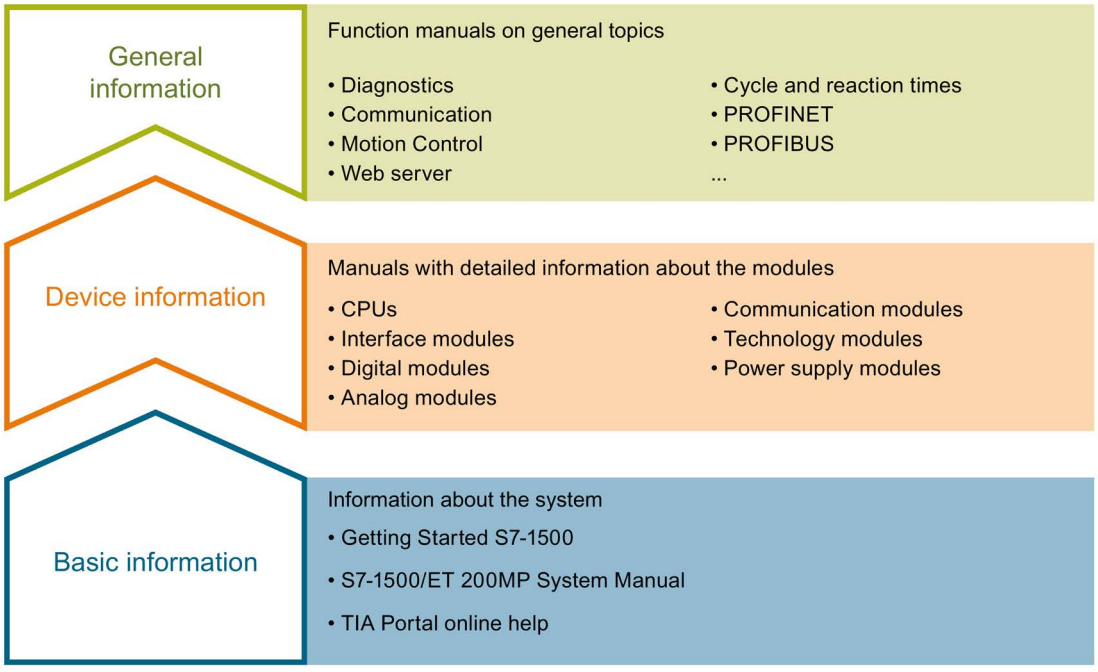

Basic information

The System Manual and Getting Started describe in detail the configuration, installation, wiring and commissioning of the SIMATIC S7-1500 and ET 200MP systems. The STEP 7 online help supports you in the configuration and programming.

Device information

Product manuals contain a compact description of the module-specific information, such as properties, wiring diagrams, characteristics and technical specifications.

General information

The function manuals contain detailed descriptions on general topics regarding the SIMATIC S7-1500 and ET 200MP systems, e.g. diagnostics, communication, Motion Control, Web server.

You can download the documentation free of charge from the Internet (http://www.automation.siemens.com/mcms/industrial-automation-systems-simatic/en/manual-overview/tech-doc-controllers/Pages/Default.aspx).

Changes and supplements to the manuals are documented in a Product Information.

Manual Collection S7-1500/ET 200MP

The Manual Collection contains the complete documentation on the SIMATIC S7-1500 automation system and the ET 200MP distributed I/O system gathered together in one file.

You can find the Manual Collection on the Internet (http://support.automation.siemens.com/WW/view/en/86140384).

My Documentation Manager

The My Documentation Manager is used to combine entire manuals or only parts of these to your own manual.
You can export the manual as PDF file or in a format that can be edited later.

You can find the My Documentation Manager on the Internet (http://support.industry.siemens.com/My/ww/en/documentation).

Application examples

Application examples support you with various tools and examples for solving your automation tasks. Solutions are shown in interplay with multiple components in the system - separated from the focus in individual products.

You can find application examples on the Internet (https://support.industry.siemens.com/sc/ww/en/sc/2054).

CAx Download Manager

The CAx Download Manager is used to access the current product data for your CAx or CAe systems.

You configure your own download package with a few clicks.

In doing so you can select:

- Product images, 2D dimension drawings, 3D models, internal circuit diagrams, EPLAN macro files
- Manuals, characteristics, operating manuals, certificates
- Product master data

You can find the CAx Download Manager on the Internet (http://support.industry.siemens.com/my/ww/en/CAxOnline).

TIA Selection Tool

With the TIA Selection Tool, you can select, configure and order devices for Totally Integrated Automation (TIA).
This tool is the successor of the SIMATIC Selection Tool and combines the known configurators for automation technology into one tool.
With the TIA Selection Tool, you can generate a complete order list from your product selection or product configuration.

You can find the TIA Selection Tool on the Internet (http://w3.siemens.com/mcms/topics/en/simatic/tia-selection-tool).

Product overview

2

2.1 Properties

Article number:

6ES7521-1BH00-0AB0

View of the module

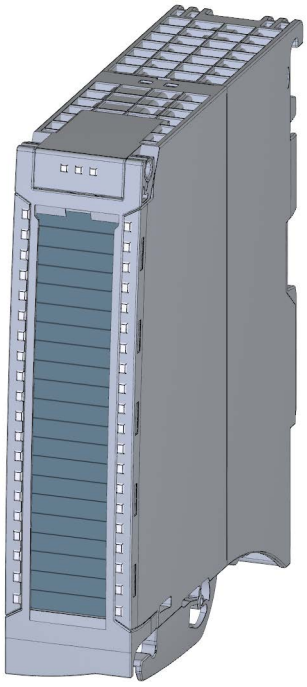

Figure 2-1 View of the DI 16x24VDC HF module

Properties

The module has the following technical properties:

- 16 digital inputs; electrically isolated in groups of 16
  - of which channel 0 and 1 optionally with counter function
- Rated input voltage 24 V DC
- Configurable input delay: 0.05 ms to 20 ms
- Configurable diagnostics (per channel)

- Configurable hardware interrupt (per channel)
- Suitable for switches and 2-/3-/4-wire proximity switches

The module supports the following functions:

Table 2- 1 Version dependencies of the module functions

Function	Firmware version of the module	Configuration software	
		STEP 7 (TIA Portal)	GSD file in STEP 7 (TIA Portal) V12 or higher, or STEP 7 V5.5 SP3 or higher
Firmware update	V1.0.0 or higher	V12 or higher	--- / X
Identification data I&M0 to I&M3	V1.0.0 or higher	V12 or higher	X
Parameter assignment in RUN	V1.0.0 or higher	V12 or higher	X
Isochronous mode**	V1.0.0 or higher	V12 or higher	---
Module-internal Shared Input (MSI)	V2.0.0 or higher	V13 Update 3 or higher (PROFINET IO only)	X (PROFINET IO only)
Configurable submodules / submodules for Shared Device	V2.0.0 or higher	V13 Update 3 or higher (PROFINET IO only)	X (PROFINET IO only)
Channel 0 and 1 optionally with counter function*	V2.1.0 or higher	V13, SP1 with HSP 0118 or higher	X (PROFINET IO only)

* Requirement for counter function: Interface module IM 155-5 firmware version V3.0 or higher or CPU S7-15XX firmware version V1.7 or higher

** Not possible in counting mode

You can configure the module with STEP 7 (TIA Portal) and with a GSD file.

Accessories

The following accessories are supplied with the module and can also be ordered separately as spare parts:

- Labeling strips
- U connector
- Universal front door

Other components

The following component must be ordered separately:

Front connectors, including potential jumpers and cable ties

For more information on accessories, refer to the system manual S7-1500/ET 200MP (http://support.automation.siemens.com/WW/view/en/59191792).

2.2 Functions

2.2.1 Count

Introduction

As of firmware version V2.1.0 of the module you have the option of using channels 0 and 1 in the "Count" mode. The other channels can be used as standard inputs (DI mode).

If do not use channels 0 and 1 in the "Count" mode, these channels can also be used as digital inputs. The two channels 0 and 1 can only be used as counter inputs together.

When counting, the edges of the digital input are acquired and evaluated accordingly e.g.:

- For counting single items up to a maximum limit
- For applications with repeating counting procedures

Reference

You will find the basics and additional information on the counting function in the function manual Counting, measuring and position detection (http://support.automation.siemens.com/WW/view/en/59709820).

Counting with channel 0 and channel 1

You control the counting function via the IO addresses of the module. These IO addresses are also known as the control interface (output addresses) and feedback interface (input addresses), see section Auto-Hotspot.

If you set the parameters of channels 0 and 1 for counting, you then have the following options:

- You influence the behavior if one of the counting limits is exceeded using
  - Stop counting.
  - Continue counting.
- The bit STS_DQ (bit in the feedback interface) signals that the counted value is in one of the following ranges depending on the parameter assignment:
  - Between a comparison value and the high counting limit.
  - Between a comparison value and the low counting limit.
- You can set a parameter for a hardware interrupt if a comparison event occurs for DQ.
- You can define counting limits and comparison values for counting from 0 ... 4294967295 (2^{32}-1).
- You can set start values or have the user program set load values for counting.

The count direction is only up.

Reference

You will find examples of counting with channels 0 and 1 in the section Examples of counting (Page 31)

Wiring

3

This section contains the block diagram of the module and outlines various connection options.

You will find information on wiring the front connector, establishing a cable shield, etc in the system manual S7-1500/ET 200MP (http://support.automation.siemens.com/WW/view/en/59191792) in the section Wiring.

Wiring and block diagrams

The figure below shows you how to connect the module and channel addressing (input byte a to input byte b). You can set parameters so that channels 0 and 1 are used for counting. Channels 2 to 15 can continue to be used as digital inputs.

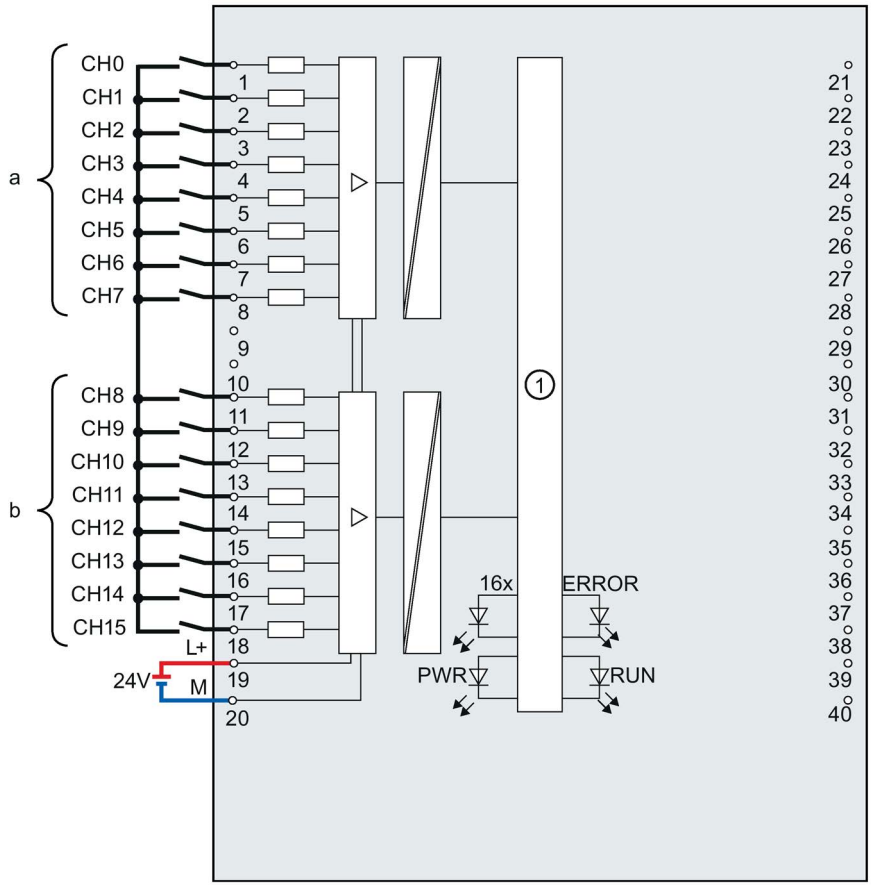

①	Backplane bus interface	CHx	Channel or channel status LED (green)
L+	Power supply 24 V DC for relay contacts	RUN	Status display LED (green)
M	Ground	ERROR	Error display LED (red)
		PWR	POWER supply voltage LED (green)

Figure 3-1 Block diagram and terminal assignment

Resistor circuitry of the encoders

To detect a wire break, it is necessary that enough quiescent current is flowing even when the encoder contacts are open. Connect a resistor of 25 kΩ to 45 kΩ with 0.25 W to the encoder contacts for this reason.

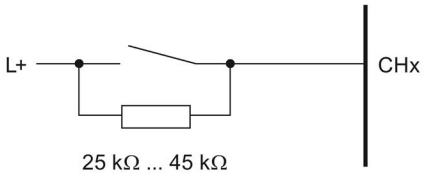

Figure 3-2 Resistor circuitry of the encoders

Tip: Using the potential jumpers

Use the potential jumpers supplied with the front connector if you want to distribute the 24V DC supply voltage to a neighboring module. This helps you to avoid having to terminate two wires to one terminal.

Proceed as follows:

1. Connect the 24 V DC supply voltage to terminals 19 and 20.
2. Insert the potential jumpers between terminals 19 and 39 (L+) and between terminals 20 and 40 (M).
3. Use the terminals 39 and 40 to distribute the potential to the next module

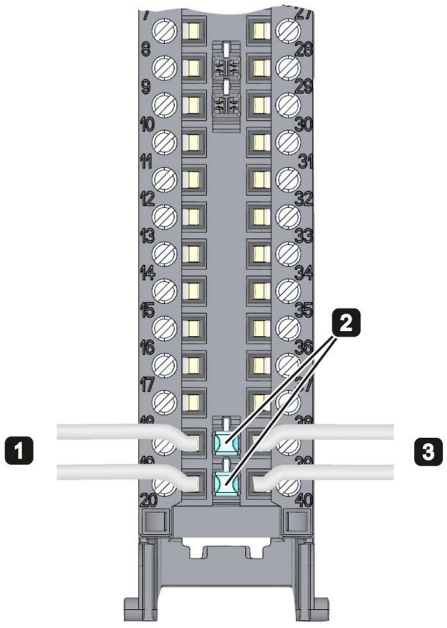

Figure 3-3 Using the potential jumpers

Note

Ensure that the maximum current load of 8 A per potential jumper is not exceeded.

Parameters/address space

4

4.1 Parameter

4.1.1 Parameters

DI 16x24VDC HF parameters

When you assign the module parameters in STEP 7, you use various parameters to specify the module properties. The parameters that can be set depend on whether you use the module in standard mode or in counter mode. You will find the parameters in section Parameters DI mode (Page 16) or section Parameters of the Counting mode (Page 18). The effective range of the configurable parameters depends on the type of configuration. The following configurations are possible:

- Central operation with a S7-1500 CPU
- Distributed operation on PROFINET IO in an ET 200MP system
- Distributed operation on PROFIBUS DP in an ET 200MP system

For parameter assignment in the user program, the parameters are transferred to the module using the WRREC instruction (parameter reassignment in RUN) and data records; see chapter Parameter assignment and structure of the parameter data records (Page 47).

4.1.2 Parameters DI mode

Parameters of the DI 16x24VDC HF in the DI mode

In the table below you will find the parameters in the DI mode. These parameters apply to channels 0 to 15.

Table 4- 1 Settable parameters and their defaults in the DI mode

Parameter	Range of values	Default setting	Parameter reassignment in RUN	Range of effectiveness with configuration software, e.g. STEP 7	
				Integrated in the hardware catalog as of STEP 7, V13 SP1 or GSD file PROFINET IO	GSD file PROFIBUS DP
Diagnostics					
• No supply voltage L+	Yes/No	No	Yes	Channel*	Channel group**
• Wire break	Yes/No	No	Yes	Channel	Channel group**
Input delay	0.05 ms, 0.1 ms, 0.4 ms, 1.6 ms, 3.2 ms, 12.8 ms, 20 ms	3.2 ms; for isochronous mode 0.05 ms (cannot be changed)	Yes	Channel	Channel group**
Hardware interrupt* **					
• Rising edge	Yes/No	No	Yes	Channel	Channel
• Falling edge	Yes/No	No	Yes	Channel	Channel
• Rising and falling edge	Yes/No	No	Yes	Channel	Channel

* If you enable diagnostics for multiple channels, you will receive an alarm surge on failure of the supply voltage because each enabled channel will detect this fault.

You can prevent this alarm surge by enabling diagnostics for one channel only.

** The scope can be assigned for each channel during parameter assignment in RUN.

*** For the configuration as a 4 x 8-channel module, a maximum of 16 hardware interrupts can be configured (channels 0 to 15).

4.1.3 Explanation of the parameters of the DI mode

No supply voltage L+

Enabling of the diagnostics, with missing or too little supply voltage L+.

Wire break

Enabling diagnostics if the line to the encoder is interrupted.

Input delay

This parameter can be used to suppress signal disruptions. Changes to the signal are only detected if they are constantly pending longer than the set input delay time.

Hardware interrupt

Specifies whether or not a hardware interrupt is disabled or with which of the following events a hardware interrupt is generated.

- Rising edge
- Falling edge
- Rising and falling edge

4.1.4 Parameters of the Counting mode

Parameters of the DI 16x24VDC HF Count in the Counting mode

If you want to use the module for counting, you need to set the module parameters as DI 16x24VDC HF Count. For channels 0 and channel 1, the following parameter settings are then possible. For channels 2 to 15, the parameter settings apply as with the DI 16x24VDC HF, , see section Parameters DI mode (Page 16).

Table 4- 2 Settable parameters and their defaults in the Counting mode

Parameter	Range of values	Default setting	Parameter reassignment in RUN	Range of effectiveness with configuration software, e.g. STEP 7	
				Integrated in the hardware catalog as of STEP 7, V13 SP1 with HSP 0118 or GSD file PROFINET IO	GSD file PROFIBUS DP
Diagnostics					
• No supply voltage L+	Yes/No	No	Yes	Channel*	---
• Wire break	Yes/No	No	Yes	Channel	---
Input delay	0.05 ms, 0.1 ms, 0.4 ms, 1.6 ms, 3.2 ms, 12.8 ms, 20 ms	3.2 ms; for isochronous mode 0.05 ms (cannot be changed)	Yes	Channel	---
Hardware interrupt	• Disable • Comparison event occurred for DQ	Disable	Yes	Channel	---
Set output DQ	• Between a comparison value and the high counting limit • Between a comparison value and the low counting limit	Between a comparison value and the high counting limit	Yes	Channel	---
Edge selection	• On rising edge • On falling edge • On rising and falling edge	On rising edge	Yes	Channel	---
High counting limit	0 ... 4294967295	4294967295	Yes	Channel	---
Comparison value	0 ... 4294967295**	1	Yes	Channel	---

Parameter	Range of values	Default setting	Parameter reassignment in RUN	Range of effectiveness with configuration software, e.g. STEP 7	
				Integrated in the hardware catalog as of STEP 7, V13 SP1 with HSP 0118 or GSD file PROFINET IO	GSD file PROFIBUS DP
Start value	0 ... 4294967295**	0	Yes	Channel	---
Behavior when a counting limit is exceeded	• Stop counting • Continue counting	Stop counter	Yes	Channel	---

* If you enable diagnostics for multiple channels, you will receive an alarm surge on failure of the supply voltage because each enabled channel will detect this fault.

You can prevent this alarm surge by enabling diagnostics for one channel only.

** Comparison value or start value must be less than or equal to the value for the high counting limit.

4.1.5 Explanation of the parameters of the Counting mode

Missing supply voltage L+

Enabling of the diagnostics, with missing or too little supply voltage L+.

Wire break

Enabling diagnostics if the line to the encoder is interrupted.

Input delay

This parameter can be used to suppress signal disruptions. Changes to the signal are only detected if they are constantly pending longer than the set input delay time.

Hardware interrupt

Specifies whether or not a hardware interrupt is generated by the event "Comparison event occurred for DQ" (rising edge at STS_DQ).

Set output DQ

With this parameter, you specify the behavior of the STS_DQ bit in the feedback interface. You can assign this bit in the user program, for example, with a hardware output, see Auto-Hotspot.

Behavior	Meaning
Between a comparison value and the high counting limit	STS_DQ bit is set if the following condition is met: Comparison value < = counted value < = high counting limit
Between a comparison value and the low counting limit	STS_DQ bit is set if the following condition is met: Low counting limit < = counted value < = comparison value

Edge selection

With this parameter you specify which edge is used to count.

You can select the following options:

- On rising edge
- On falling edge
- On rising and falling edge

High counting limit

With this parameter you limit the counting range. You can enter a value up to 4294967295 (2^{32} - 1).

Comparison value

With this parameter you specify the count value at which the digital output DQ (STS_DQ bit of the feedback interface) switches due to the selected comparison event.

Start value

With this parameter, you specify the value at which counting begins and is continued if defined events occur. The following condition must be met:

Low counting limit < = start value < = high counting limit.

Behavior when a counting limit is exceeded

With this parameter, you specify the behavior if a counting limit is exceeded.

Behavior	Meaning
Stop counting	After a counting limit is exceeded, the counting procedure is aborted and the STS_GATE bit (internal gate) is reset. To restart the counting, the SW_GATE bit must be reset via the control interface and set again.
Continue counting	After a counting limit is exceeded, the counted value is set to the other counting limit and counting is continued.

4.2 Address space

The module can be configured differently in STEP 7; see following table. Depending on the configuration, additional/different addresses are assigned in the process image of the inputs.

The letters "a to b" are printed onto the module. "EB a" for example, stands for module start address input byte a.

Configuration options of DI 16x24VDC HF

You can configure the module with STEP 7 (TIA Portal) or with a GSD file.

When you configure the module by means of the GSD file, the configurations are available under different abbreviations/module names.

The following configurations are possible:

Table 4- 3 Configuration options

Configuration	Short designation/ module name in the GSD file	Configuration software, e.g., with STEP 7 (TIA Portal)	
		Integrated in hardware catalog STEP 7 (TIA Portal)	GSD file in STEP 7 (TIA Portal) V12 or higher or STEP 7 V5.5 SP3 or higher
1 x 16-channel without value status	DI 16x24VDC HF	V12 or higher	X
1 x 16-channel with value status	DI 16x24VDC HF QI	V12 or higher	X
2 x 8-channel without value status	DI 16x24VDC HF S	V13 Update 3 or higher (PROFINET IO only)	X (PROFINET IO only)
2 x 8-channel with value status	DI 16x24VDC HF S QI	V13 Update 3 or higher (PROFINET IO only)	X (PROFINET IO only)
1 x 16-channel with value status for module-internal shared input with up to 4 submodules	DI 16x24VDC HF MSI	V13 Update 3 or higher (PROFINET IO only)	X (PROFINET IO only)
1 x 16-channel with value status (channel 0 and channel 1 for counting, channels 2 to 15 as digital inputs)	DI 16x24VDC HF Count	V13, SP1 with HSP 0118 or higher	X (PROFINET IO only)

Value status (Quality Information, QI)

The value status is always activated for the following module names:

- DI 16x24VDC HF QI,
- DI 16x24VDC HF S QI
- DI 16x24VDC HF MSI
- DI 16x24VDC HF Count

An additional bit is assigned to each channel for the value status. The value status bit indicates if the read in digital value is valid. (0 = value is incorrect).

4.2.1 Address space DI mode

Address space for configuration as 16-channel DI 16x24VDC HF QI

The figure below shows the assignment of the address space for the configuration as a 16-channel module with value status. You can freely assign the start address for the module. The addresses of the channels are derived from the start address.

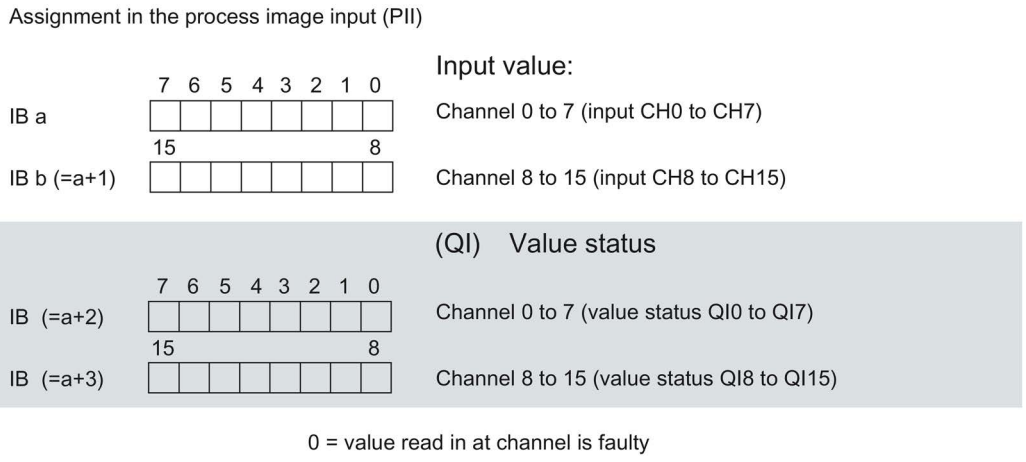

Figure 4-1 Address space for configuration as 16-channel DI 16x24VDC HF QI with value status

Address space for configuration as 2 x 8-channel DI 16x24VDC HF S QI

For the configuration as a 2 x 8-channel module, the channels of the module are divided into multiple submodules. The submodules can be assigned to different IO controllers when the module is used in a shared device.

The number of usable submodules is dependent on the interface module used. Observe the information in the manual for the particular interface module.

Contrary to the 1 x 16-channel module configuration, each of the two submodules has a freely assignable start address.

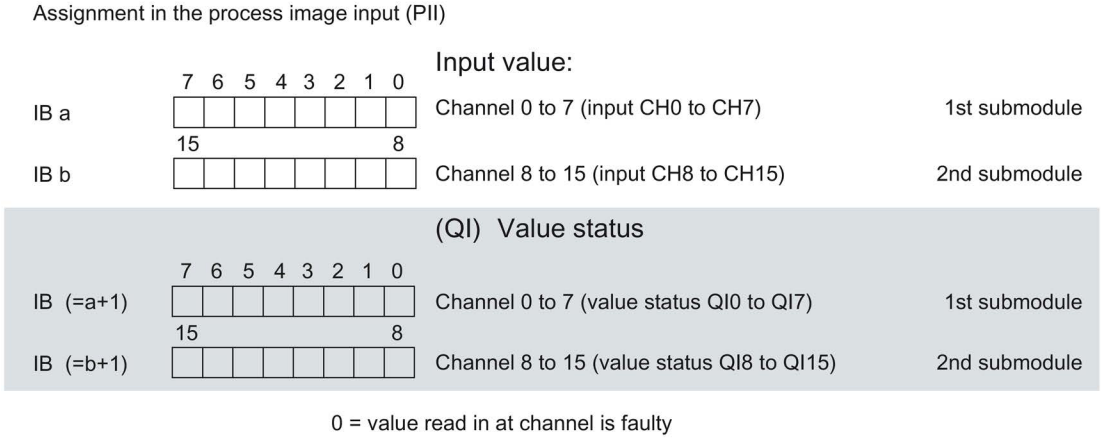

Figure 4-2 Address space for configuration as 2 x 8-channel DI 16x24VDC HF S QI

Address space for configuration as 1 x 16-channel DI 16x24VDC HF MSI

The channels 0 to 15 of the module are copied in up to four submodules with configuration 1 x 16-channel module (Module-internal shared input, MSI). Channels 0 to 15 are then available with identical input values in different submodules. These submodules can be assigned to up to four IO controllers when the module is used in a shared device. Each IO controller has read access to the same channels.

The number of IO controllers depends on the interface module being used. Please observe the information in the manual for the particular interface module.

Value status (Quality Information, QI)

The meaning of the value status depends on the submodule on which it occurs.

For the first submodule (=basic submodule), the value status 0 indicates that the value is incorrect.

For the 2nd to 4th submodule (=MSI submodule), the value status 0 indicates that the value is incorrect or the basic submodule has not yet been configured (not ready).

The following figure shows the assignment of the address space with submodules 1 and 2 and the value status.

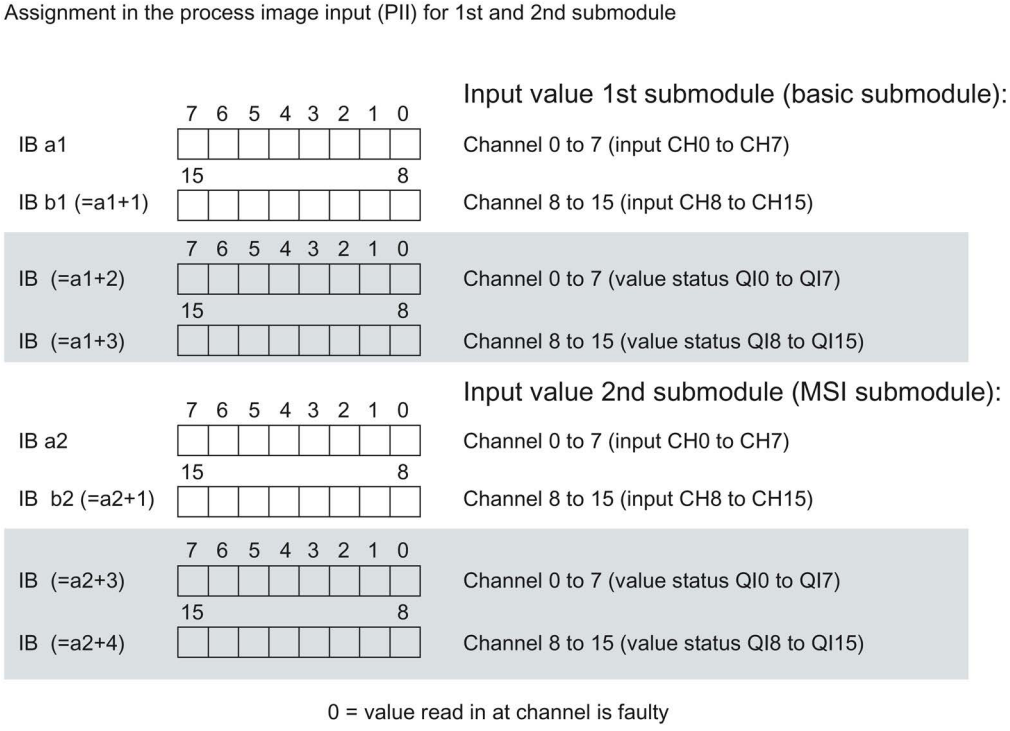

Figure 4-3 Address space for configuration as 1 x 16-channel DI 16x24VDC HF MSI

The following figure shows the assignment of the address space with submodules 3 and 4 and the value status.

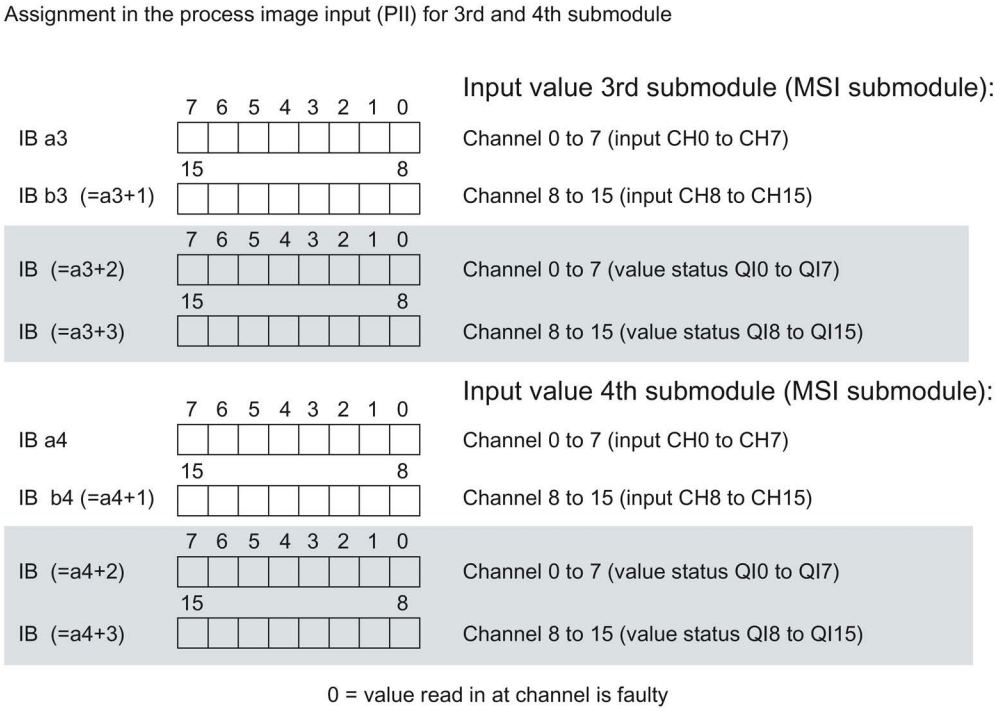

Figure 4-4 Address space for configuration as 1 x 16-channel DI 16x24VDC HF MSI

Reference

You will find information on the module-internal shared input/shared output (MSI/MSO) function in the function manual PROFINET with STEP 7 V13 (http://support.automation.siemens.com/WW/view/en/49948856) in the section Module-internal shared input/shared output (MSI/MSO).

4.2.2 Address space Counting mode

Address space for configuration as 1 x 16-channel DI 16x24VDC Count

The address space of channel 0 and channel 1 used for counting consists of the control and feedback interface. The Count function is controlled directly via the two interfaces. With suitable parameter assignment, a hardware interrupt is triggered.

If you use the module in the "Counting mode" (channels 0 and 1), the module occupies the following address areas:

- 16 bytes in the process image output (control interface).
- 24 bytes in the process image input (feedback interface).

Control interface

The figure below shows the address assignment of the module in the process image output. You use the control interface, for example, to start the counter or to set the counter value. With the "SW gate" control bit you open and close the software gate of the corresponding channel.

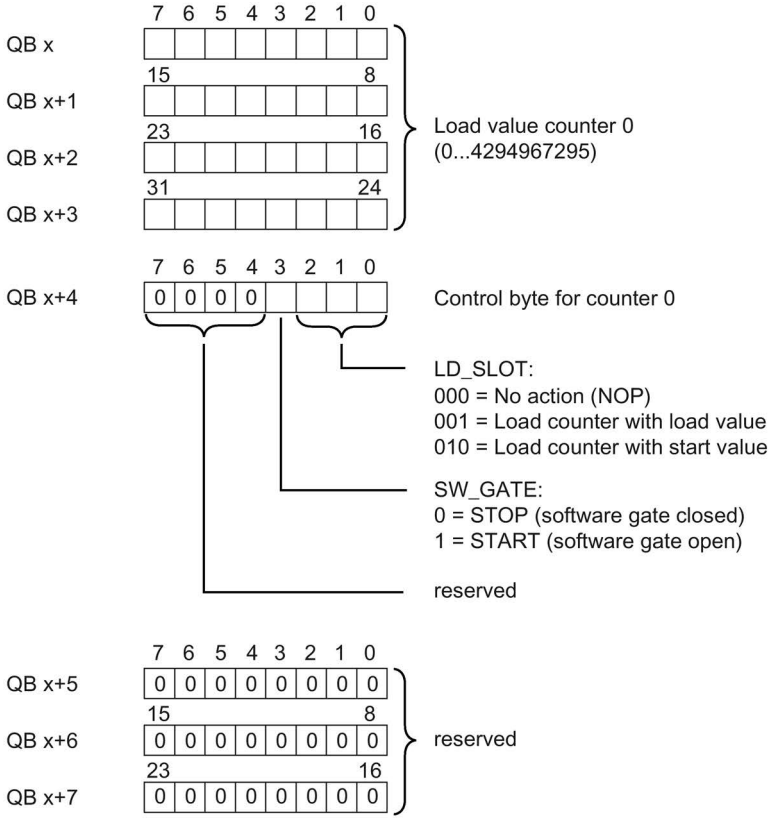

Figure 4-5 Assignment of the address space of the control interface of the DI 16x24VDC Count (bytes 0 to 7)

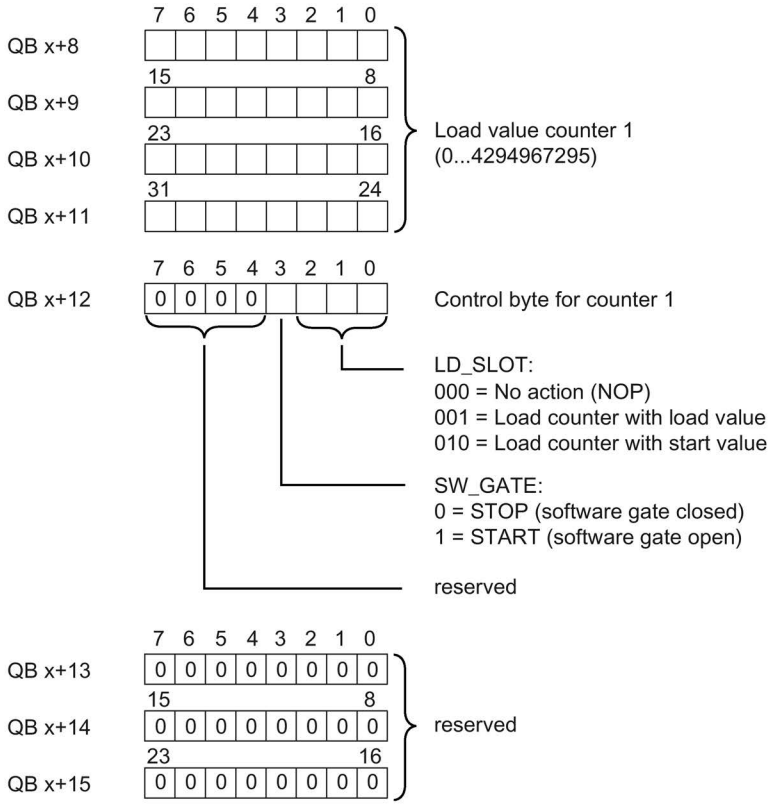

Figure 4-6 Assignment of the address space of the control interface of the DI 16x24VDC Count (bytes 8 to 15)

Feedback interface

The figure below shows the address assignment of the module in the process image input. The feedback interface for the counters (channels 0 and 1) begins at input byte x+4.

Via the feedback interface, the user program receives current counted values and status information from the module.

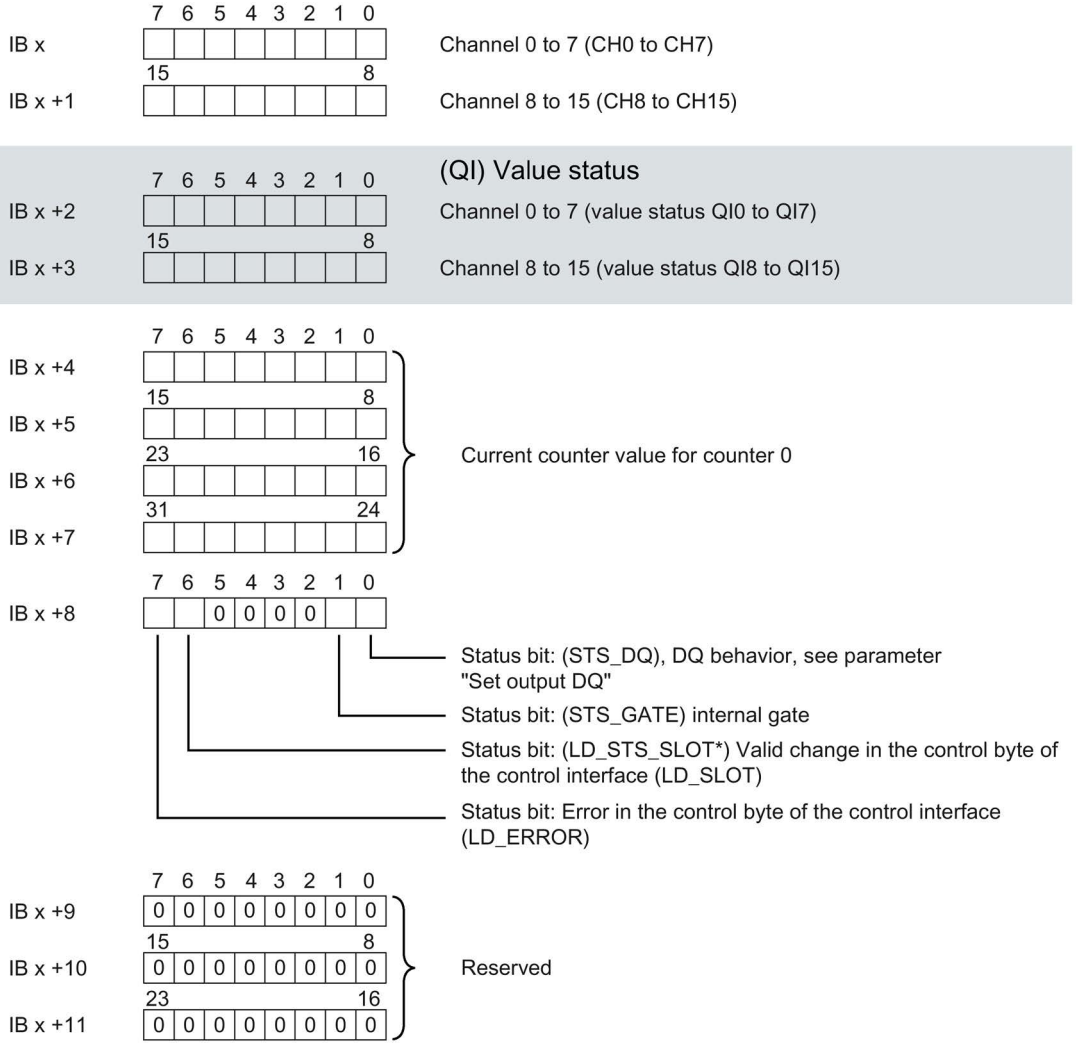

* "Acknowledgment bit" for bits 0 to 2 in the control interface (LD_SLOT). This bit changes its status when a new valid command is entered in LD_SLOT.

Figure 4-7 Assignment of the address space of the feedback interface of the DI 16x24VDC Count (bytes 0 to 11)

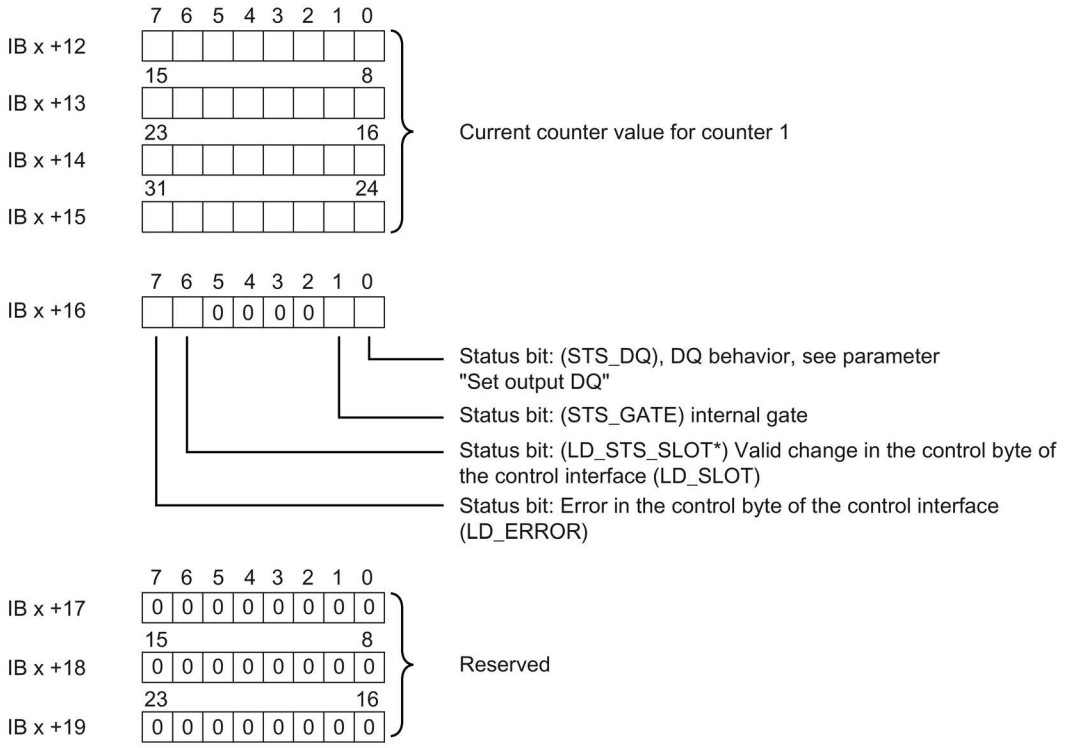

* "Acknowledgment bit" for bits 0 to 2 in the control interface (LD_SLOT). This bit changes its status when a new valid command is entered in LD_SLOT.

Figure 4-8 Assignment of the address space of the feedback interface of the DI 16x24VDC Count (bytes 12 to 19)

4.2.3 Examples of counting

In this section, you will find examples of the behavior of the counter and how you can specify this behavior. You specify the properties of the counter in the parameter assignment.

Behavior when a counting limit is exceeded - Stop counting

The following section describes the effects of the parameter "Behavior when a counting limit is exceeded = Stop counting". To control the counter, the bits of the control byte of the control interface are used, see section Address space Counting mode (Page 27)

Counting begins at the current counted value (the SW_GATE is set in the control byte). Bit sequence in the control byte of the control interface 0000 1000.

After exceeding the high counting limit, counting is aborted (counting stops), the counted value jumps to the low counting limit = 0. The STS_GATE bit is reset.

To restart the counting, the SW_GATE bit must be reset via the control interface and set again.

Whether or not counting is started again with the current counter value or with the start value depends on the command byte in the control interface.
Bit sequence in control byte of the control interface:

- bit 0 to 2 = "000" Start with current counter value
- bit 0 to 2 = "010" Start with start value

If the SW_GATE bit is reset in the control byte of the control interface before reaching the high counting limit, counting is stopped.

The following figure shows an example of the principle of stopping counting when a counting limit is exceeded.

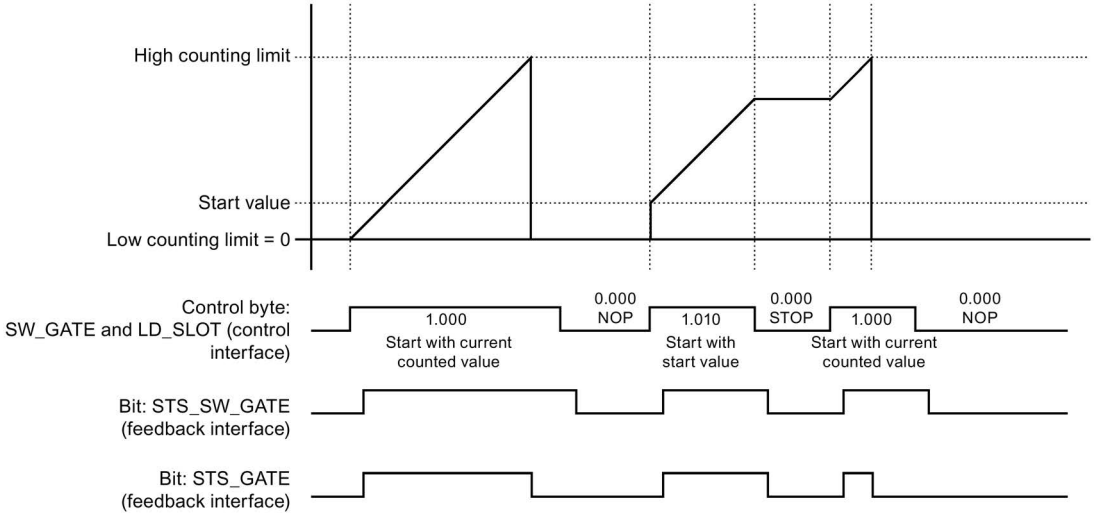

Figure 4-9 Principle: Stop counting

Behavior when a counting limit is exceeded - Continue counting

The following section describes the effects of the parameter "Behavior when a counting limit is exceeded = Continue counting". To control the counter, the bits of the control byte of the control interface are used, see section Address space Counting mode (Page 27), subsection Control interface.

Counting begins at the current counted value (the SW-GATE is set in the control byte). Bit sequence in the control byte of the control interface 0000 1000.

After the high counting limit is exceeded, the counted value jumps to the low counting limit = 0 and counting is continued.

If the SW_GATE bit is reset in the control byte of the control interface before reaching the high counting limit, counting is stopped.

The following figure shows an example of the principle of continuing counting when a counting limit is exceeded.

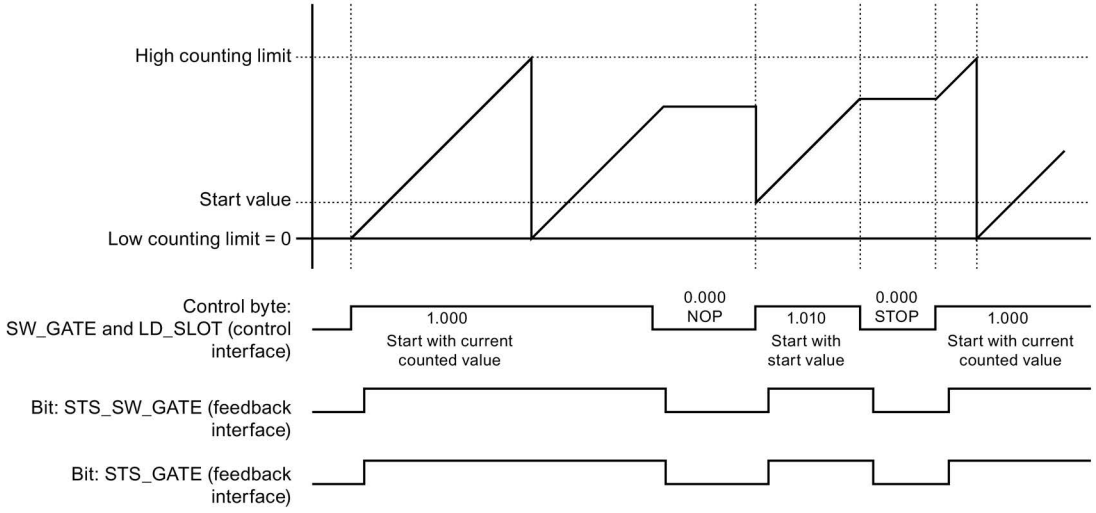

Figure 4-10 Principle: Continue counting

Set output DQ - behavior of the STS_DQ bit

The following section shows the behavior of the STS_DQ bit with the parameter assignment "Set output DQ = between comparison value and high counting limit".

The STS_DQ bit is set to 1

when the comparison value < = counted value <= high counting limit is reached.

As an option, a hardware interrupt can be enabled in the parameter assignment. This is generated with the parameter rising edge of the STS_DQ bit.

The following figure shows an example of the behavior of the STS_DQ bit between the comparison value and high counting limit.

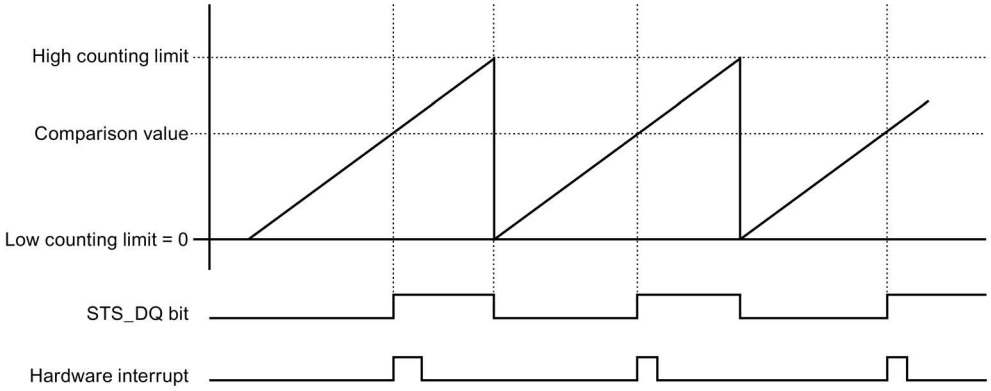

Figure 4-11 Behavior of the STS_DQ bit and hardware interrupt

The following section shows the behavior of the STS_DQ bit with the parameter assignment "Set output DQ = between low counting limit and comparison value".

The STS_DQ bit is set to 1

when the low counting limit < = counted value < = comparison value is reached.

As an option, a hardware interrupt can be enabled in the parameter assignment. This is generated with the parameter rising edge of the STS_DQ bit.

The following figure shows an example of the behavior of the STS_DQ bit between the low counting limit and comparison value.

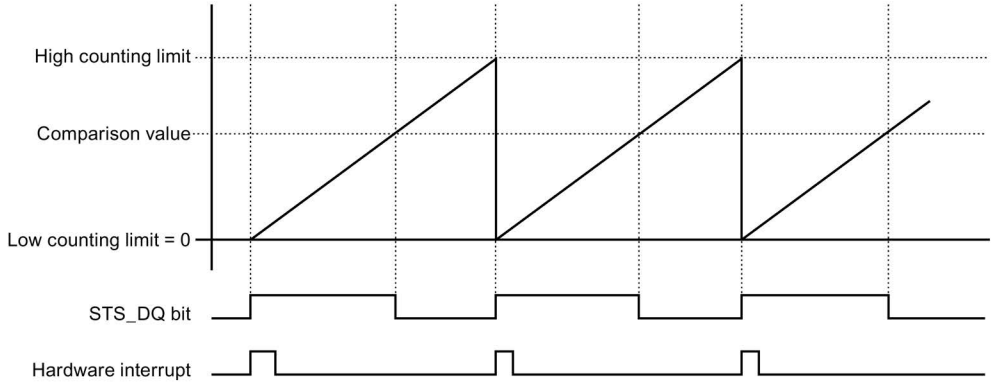

Figure 4-12 Behavior of the STS_DQ bit and hardware interrupt

Counting limits

The counting limits define the range of values of the counted value used. The counting limits can be set in the parameters and can be changed with the user program during runtime.

Settable high counting limit: 4294967295 (2^{32} -1).

Low counting limit (not settable): 0

You can continue or terminate (automatic gate stop) counting if a counting limit is exceeded, see the parameter "Behavior when a counting limit is exceeded".

Start value/load value

The start value is specified in the parameter assignment with STEP 7 (TIA Portal). The load value can be changed by the user program. Both values must be between the low counting limit and high counting limit.

Comparison values

You specify a comparison value per channel that can control the feedback bit STS_DQ regardless of the user program. When the current counted value corresponds to the comparison condition set in the parameters, the feedback bit STS_DQ is set. You can use the feedback bit STS_DQ to control a digital output of a digital output module.

The comparison values can be set in the parameters and can be changed with the user program during runtime.

Gate control

The opening and closing of the software gate (SW-GATE) defines the time window in which the count signals are acquired. The software gate is controlled by the user program.

Reference

You can find additional information on the counting functionality in the function manual S7-1500, ET 200MP, ET 200SP counting, measuring and position detection (http://support.automation.siemens.com/WW/view/en/59709820).

Interrupts/diagnostics alarms

5

5.1 Status and error displays

LED displays

The following figure shows the LED displays (status and error displays) of DI 16x24VDC HF.

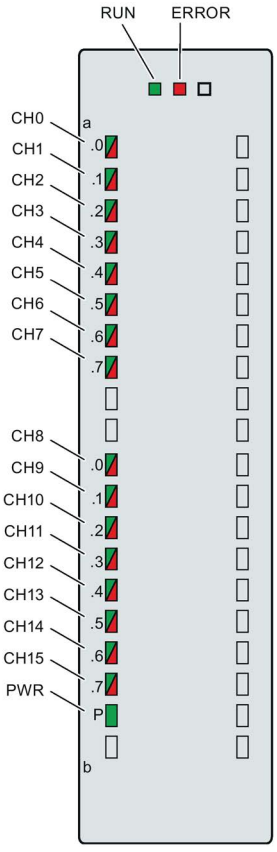

Figure 5-1 LED displays of the module DI 16x24VDC HF

Meaning of the LED displays

The following tables explain the meaning of the status and error displays. Remedial measures for diagnostic reports can be found in chapter Diagnostics alarms (Page 40).

RUN and ERROR LED

Table 5- 1 Status and error displays RUN and ERROR

LED		Meaning	Remedy
RUN	ERROR		
□ Off	□ Off	Voltage missing or too low at backplane bus	• Switch on the CPU and/or the system power supply modules. • Verify that the U connectors are inserted. • Check to see if too many modules are inserted.
☼ Flashes	□ Off	The module starts and flashes until the valid parameter assignment is set.	---
■ On	□ Off	Module is configured	
■ On	☼ Flashes	Indicates module errors (at least one error at one channel, e.g., wire break).	Evaluate the diagnostics data and eliminate the error (e.g., wire break).
☼ Flashes	☼ Flashes	Hardware defective	Replace the module.

PWR LED

Table 5- 2 PWR status display

LED PWR	Meaning	Remedy
□ Off	Supply voltage L+ too low or missing	Check supply voltage L+.
■ On	Supply voltage L+ is present and OK	---

CHx LED

Table 5- 3 CHx status display

LED CHx	Meaning	Remedy
□ Off	0 = Status of the input signal	---
■ On	1 = Status of the input signal	---
■ On	Diagnostics: Wire break	Check the wiring. When using simple switches, deactivate diagnostics or connect a resistor (25 kΩ … 45 kΩ) to the encoder contacts.
	Supply voltage L+ too low or missing	Check supply voltage L+.

5.2 Interrupts

Digital input module DI 16x24VDC HF supports diagnostic and hardware interrupts.

Diagnostic interrupt

The module generates a diagnostic interrupt at the following events:

- Missing supply voltage L+
- Wire break
- Parameter assignment error

Hardware interrupt

The module generates a hardware interrupt at the following events:

- Rising edge
- Falling edge
- Rising and falling edge
- Comparison event occurred for DQ (only in "Counting mode")

For detailed information on the error event, refer to the hardware interrupt organization block with the "RALRM" instruction (read additional interrupt information) and to the STEP 7 online help.

The module channel that triggered the hardware interrupt is entered in the start information of the organization block. The following figure shows the assignment to the bits of double word 8 in local data.

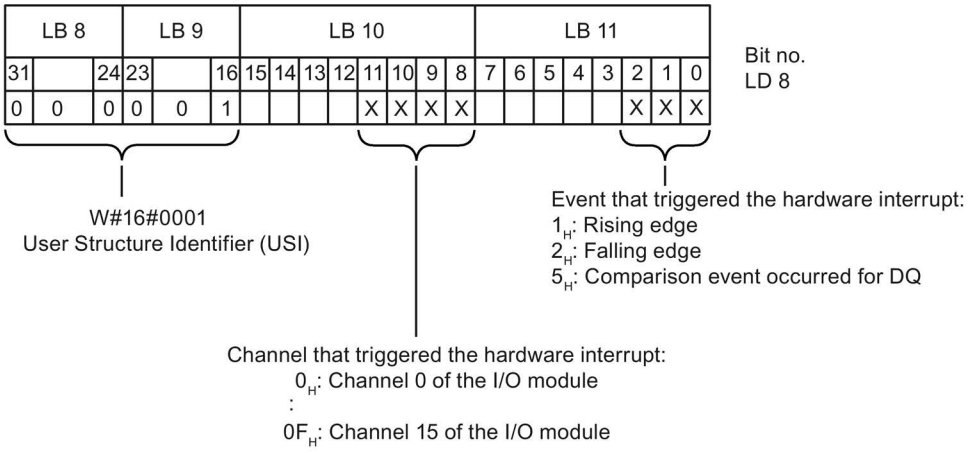

Figure 5-2 Start information of the organization block

Structure of the additional interrupt information

Table 5- 4 Structure of USI = W#16#0001

Data block name		Contents	Comment	Bytes
USI (User Structure Identifier)		W#16#0001	Additional interrupt info for hardware interrupts of the I/O module	2
The channel that triggered the hardware interrupt follows.				
	Channel	B#16#00 to B#16#0F	Number of the event-triggering channel (channel 0 to channel 15 of the module)	1
It follows the error event that triggered the hardware interrupt.				
	Event	B#16#01	Rising edge	1
		B#16#02	Falling edge	
		B#16#05	Comparison event occurred for DQ (only in "Counting mode")	

5.3 Diagnostics alarms

Diagnostics alarms

A diagnostics alarm is output for each diagnostics event and the ERROR LED flashes on the module. The diagnostics alarms can, for example, be read from the diagnostics buffer of the CPU. You can evaluate the error codes with the user program.

If the module is operated distributed with PROFIBUS DP in an ET 200MP system, you have the option to read out diagnostics data with the instruction RDREC or RD_REC using data record 0 and 1. The structure of the data records is available on the Internet in the "Manual for interface module IM 155-5 DP ST (6ES7155-5BA00-0AB0)".

Table 5- 5 Diagnostics alarms, their meaning and corrective measures

Diagnostics alarm	Error code	Meaning	Corrective measures
Wire break*	6_H	Impedance of encoder circuit too high	Use a different encoder type or modify the wiring, for example, using cables with larger cross-section
		Wire break between the module and sensor	Connect the cable
		Channel not connected (open)	• Disable diagnostics • Connect a resistor of 25 kΩ to 45 kΩ to the encoder contacts
Parameter assignment error	10_H	• The module cannot evaluate parameters for the channel • Incorrect parameter assignment	Correct the parameter assignment
Load voltage missing	11_H	Supply voltage L+ of the module is missing	Connect supply voltage L+ to module/channel
Hardware interrupt lost	16_H	The module cannot trigger an interrupt because the previous interrupt was not acknowledged; possibly a configuration error	• Change interrupt processing in the CPU and, if necessary, edit the module parameters. • The error persists until the module is assigned new parameters

* If the supply voltage fails in case of a pending wire break diagnostics, the value status momentarily indicates an incorrect value.

Technical specifications

6

Technical specifications of the DI 16x24VDC HF

	6ES7521-1BH00-0AB0
Product type designation	DI 16x24VDC HF
General information	
Hardware version	FS01
Firmware version	V2.1.0
Product function	
I&M data	Yes; I&M0 to I&M3
Engineering with	
STEP 7 TIA Portal can be configured/integrated as of version	V13 SP1 / -
STEP 7 can be configured/integrated as of version	V5.5 SP3 / -
PROFIBUS as of GSD version/GSD revision	V1.0 / V5.1
PROFINET as of GSD version/GSD revision	V2.3 / -
Operating mode	
DI	Yes
Counter	Yes
MSI	Yes
Supply voltage	
Rated value (DC)	24 V
Valid range, low limit (DC)	20.4 V
Valid range, high limit (DC)	28.8 V
Reverse polarity protection	Yes
Input current	
Current consumption, max.	20 mA; with 24 V DC supply
Power	
Power consumption from the backplane bus	1.1 W
Power loss	
Power loss, typ.	2.6 W
Digital inputs	
Number of inputs	16
Digital inputs, configurable	Yes
reading m/p	reading p
Input characteristic curve acc. to IEC 61131, type 3	Yes

	6ES7521-1BH00-0AB0
Digital input functions, can be set in parameters	
Gate start/stop	Yes
freely usable digital input	Yes
Counter	
• Number, max.	2
• Counting frequency, max.	1 kHz
• Counting width	32 bits
• Counting direction up/down	Up
Input voltage	
Type of input voltage	DC
Rated value (DC)	24 V
for signal "0"	-30 ... +5 V
for signal "1"	+11 ... +30 V
Input current	
for signal "1", typ.	2.5 mA
Input delay (for rated value of input voltage)	
For standard inputs	
• Configurable	Yes; 0.05 / 0.1 / 0.4 / 1.6 / 3.2 / 12.8 / 20 ms
• with "0" to "1", min.	0.05 ms
• with "0" to "1", max.	20 ms
• with "1" to "0", min.	0.05 ms
• with "1" to "0", max.	20 ms
For interrupt inputs	
• Configurable	Yes
for counters/technological functions	
• Configurable	Yes
Cable length	
shielded, max.	1000 m
unshielded, max.	600 m
Encoders	
Connectable encoders	
2-wire sensor	Yes
• Permissible quiescent current (2-wire sensor), max.	1.5 mA
Isochronous mode	
Isochronous mode (application synchronized up to terminal)	Yes
Filtering and processing time (TCI), min.	80 µs; with 50 µs filter time
Bus cycle time (TDP), min.	250 µs

	6ES7521-1BH00-0AB0
Interrupts/diagnostics/status information	
Interrupts	
Diagnostic interrupt	Yes
Hardware interrupt	Yes
Diagnostics alarms	
Diagnostics	Yes
Monitoring of supply voltage	Yes
Wire break	Yes; to I < 350 µA
Short-circuit	No
Fuse blown	No
Diagnostics indicator LED	
RUN LED	Yes; green LED
ERROR LED	Yes; red LED
Monitoring of the supply voltage (PWR LED)	Yes; green LED
Channel status display	Yes; green LED
For channel diagnostics	Yes; red LED
For module diagnostics	Yes; red LED
Electrical isolation	
Electrical isolation of channels	
Between the channels	No
Between the channels, in groups of	16
Between the channels and the backplane bus	Yes
Between the channels and the supply voltage of the electronics	No
Permitted potential difference	
Between different circuits	75 V DC / 60 V AC (basic insulation)
Isolation	
Isolation tested with	707 V DC (type test)
Distributed mode	
prioritized startup	Yes
Dimensions	
Width	35 mm
Height	147 mm
Depth	129 mm
Weights	
Weight, approx.	240 g

Tolerances of the programmable input delay

Table 6- 1 Tolerances of the programmable input delay

Input delay	Tolerance range
0.05 ms	43 µs to 57 µs
0.1 ms	86 µs to 114 µs
0.4 ms	344 µs to 456 µs
1.6 ms	1.5 ms to 1.9 ms
3.2 ms (preset)	3 ms to 4 ms
12.8 ms	12 ms to 15 ms
20 ms	19 ms to 23 ms

Dimensional drawing

A

The dimensional drawing of the module on the mounting rail, as well as a dimensional drawing with open front cover, are provided in the appendix. Always observe the specified dimensions for installation in cabinets, control rooms, etc.

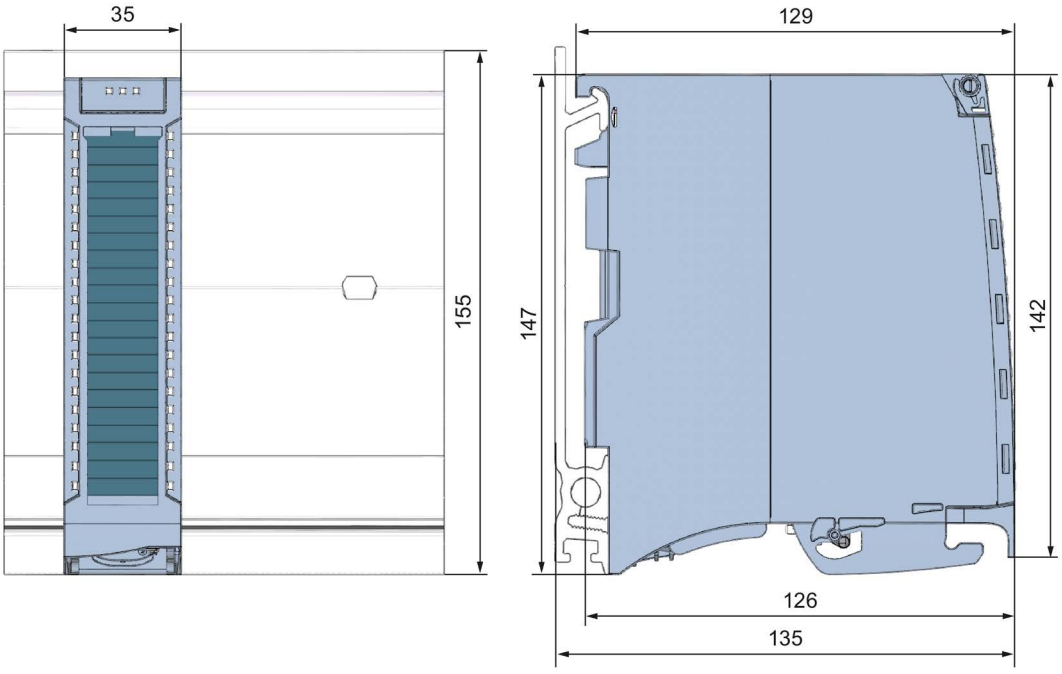

Figure A-1 Dimensional drawing of the DI 16x24VDC HF module

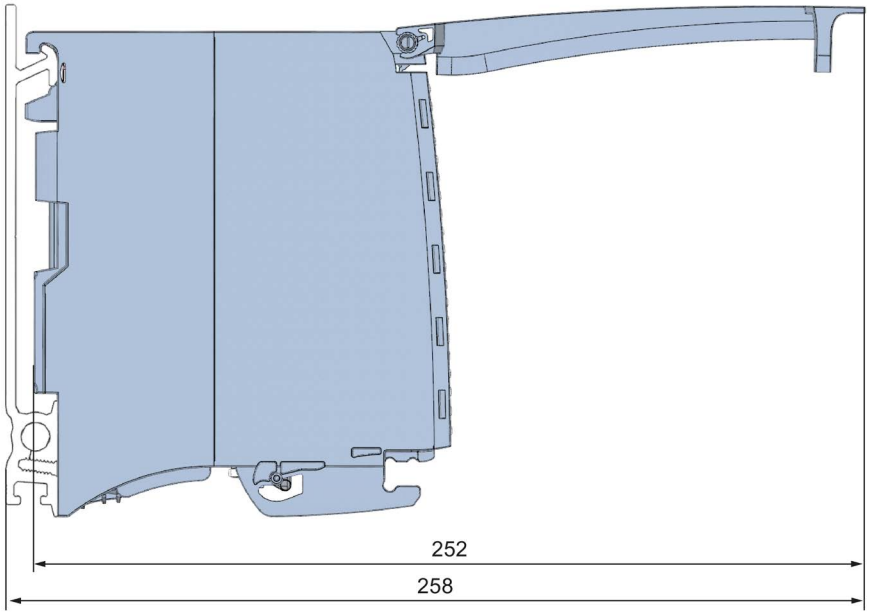

Figure A-2 Dimensional drawing of the DI 16x24VDC HF module, side view with open front cover

Parameter data records

B

B.1 Parameter assignment and structure of the parameter data records

The data records of the module have an identical structure, regardless of whether you configure the module with PROFIBUS DP or PROFINET IO.

Dependencies for configuration with GSD file

When configuring the module with a GSD file, remember that the settings of some parameters are dependent on each other. The parameters are only checked for plausibility by the module after the transfer to the module.

DI mode: no dependencies. You can assign the individual parameters in any combination.

Counting mode: The following table lists the parameters that depend on one another:

Table B- 1 Dependencies of parameters for configuration with GSD file

Device-specific parameters (GSD file)	Dependent parameters
Comparison value	0 ... high counting limit
Start value	0 ... high counting limit

Parameter assignment in the user program

You have the option to reconfigure the module in RUN (e.g. the input delay values of selected channels can be edited without having an effect on the other channels).

Parameter assignment in RUN

The WRREC instruction is used to transfer the parameters to the module using data records 0 to 15. The parameters set in STEP 7 do not change in the CPU, which means the parameters set in STEP 7 are still valid after a restart.

The parameters are only checked for plausibility by the module after the transfer.

Output parameter STATUS

The module ignores errors that occurred during the transfer of parameters with the WRREC instruction and continues operation with the previous parameter assignment. However, a corresponding error code is written to the STATUS output parameter.

The description of the WRREC instruction and the error codes is available in the STEP 7 online help.

Operation of the module behind a PROFIBUS DP interface module

If the module is operated behind a PROFIBUS DP interface module, the parameter data records 0 and 1 are not read back. You get the diagnostics data records 0 and 1 for the read back parameter data records 0 and 1. You can find more information in the Interrupts section of the PROFIBUS DP interface module device manual on the Internet (http://support.automation.siemens.com/WW/view/en/78324181).

B.2 Structure of the parameter data records DI mode

Assignment of data record and channel

For the configuration with 1 x 16 channels, the parameters are located in data records 0 to 15 and are assigned as follows:

- Data record 0 for channel 0
- Data record 1 for channel 1
- …
- Data record 14 for channel 14
- Data record 15 for channel 15

For the configuration as a 2 x 8-channel module, the module has two submodules with eight channels each. The parameters for the channels are located in data records 0 to 7 and are assigned as follows:

- Data records 0 to 7 for channels 0 to 7 (submodule 1)
- Data records 0 to 7 for channels 8 to 15 (submodule 2)

Address the respective submodule for data record transfer.

Structure of a data record in the DI mode

The example in the figure below shows the structure of data record 0 for channel 0. The structure of channels 1 to 15 is identical. The values in byte 0 and byte 1 are fixed and may not be changed.

Enable a parameter by setting the corresponding bit to "1".

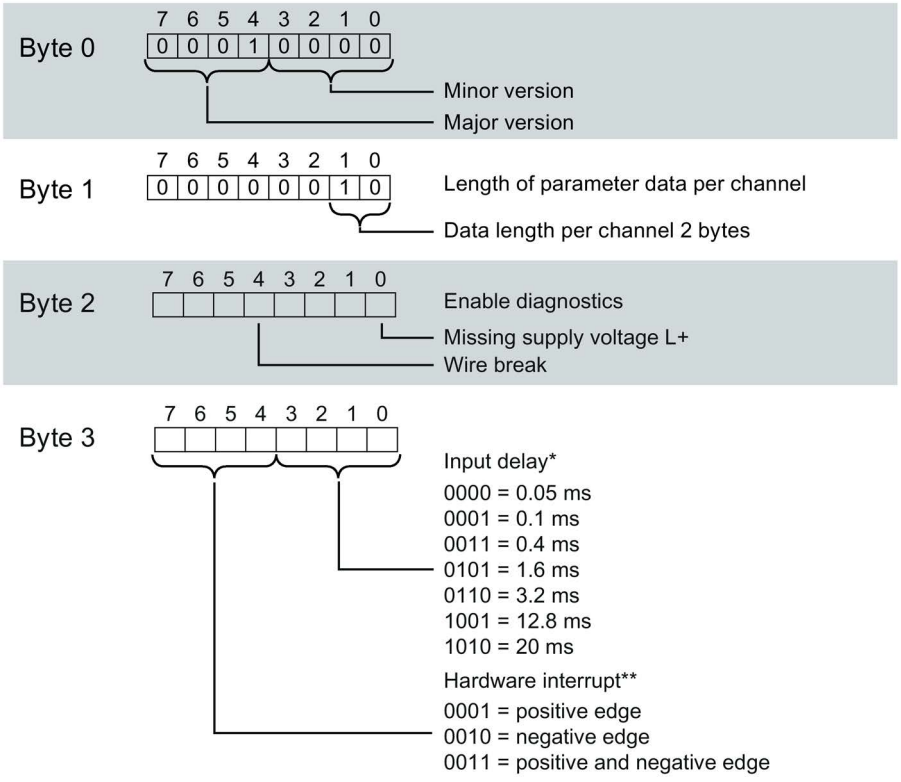

* For isochronous mode 0.05 ms (cannot be changed)

** Hardware interrupts can only be activated using the data record if a hardware interrupt OB is assigned to the channel in STEP 7

Figure B-1 Structure of data record 0: Bytes 0 to 3

B.3 Structure of the parameter data records Counting mode

Assignment of data record and channel

For the configuration with 1 x 16 channels, the parameters are located in data records 0 to 15 and are assigned as follows:

- Data record 0 for channel 0 with counting function
- Data record 1 for channel 1 with counting function
- Data record 2 for channel 2 (structure as in DI mode)
- ...
- Data record 14 for channel 14 (structure as in DI mode)
- Data record 15 for channel 15 (structure as in DI mode)

Structure of data record 0 of the Counting mode

The example in the figure below shows the structure of data record 0 for channel 0. The structure of channel 1 is identical, the values are located in data record 1.

The values in byte 0 and byte 1 are fixed and may not be changed.

Enable a parameter by setting the corresponding bit to "1".

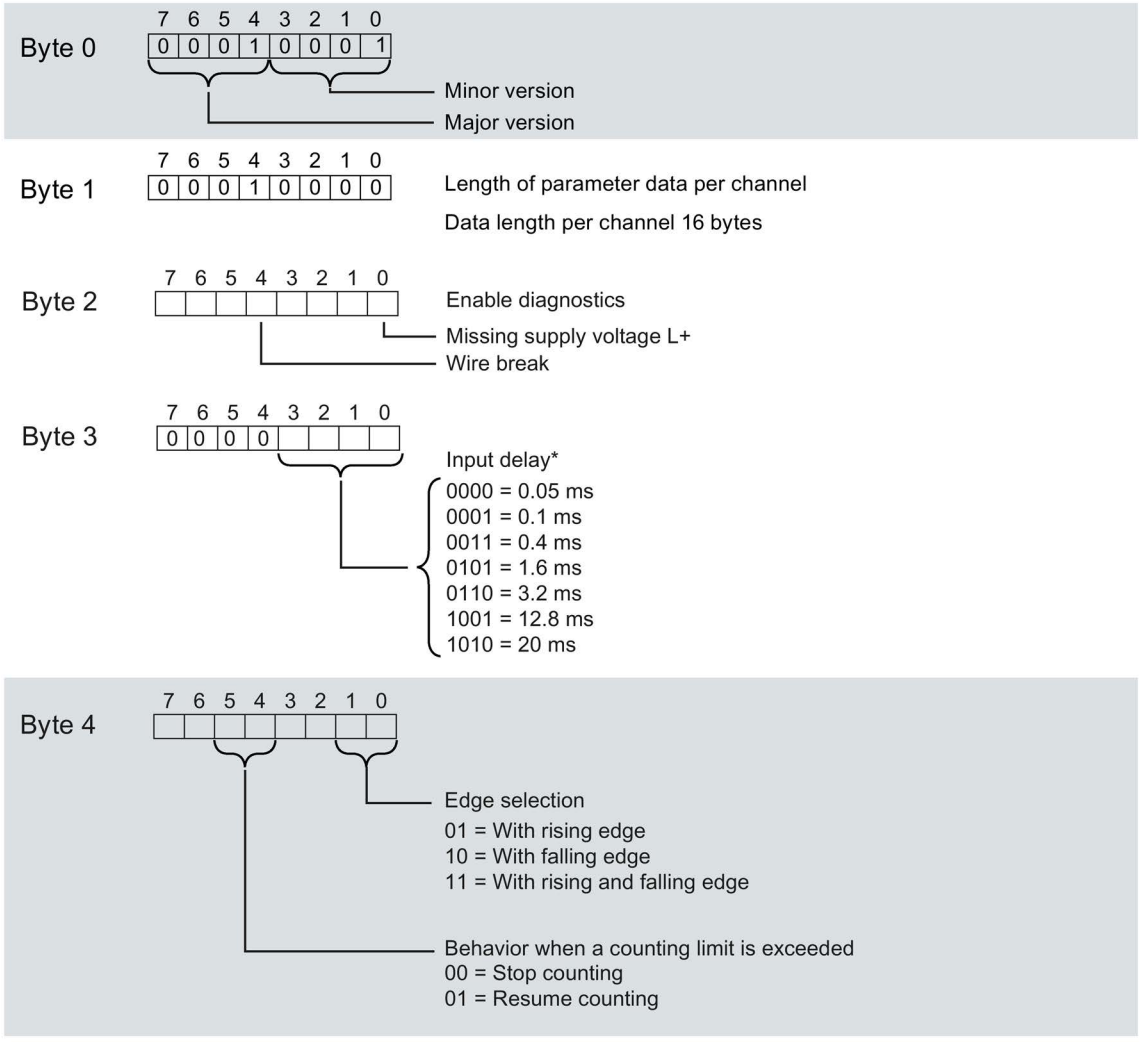

* For isochronous mode 0.05 ms (cannot be changed)

Figure B-2 Structure of data record 0: Bytes 0 to 4

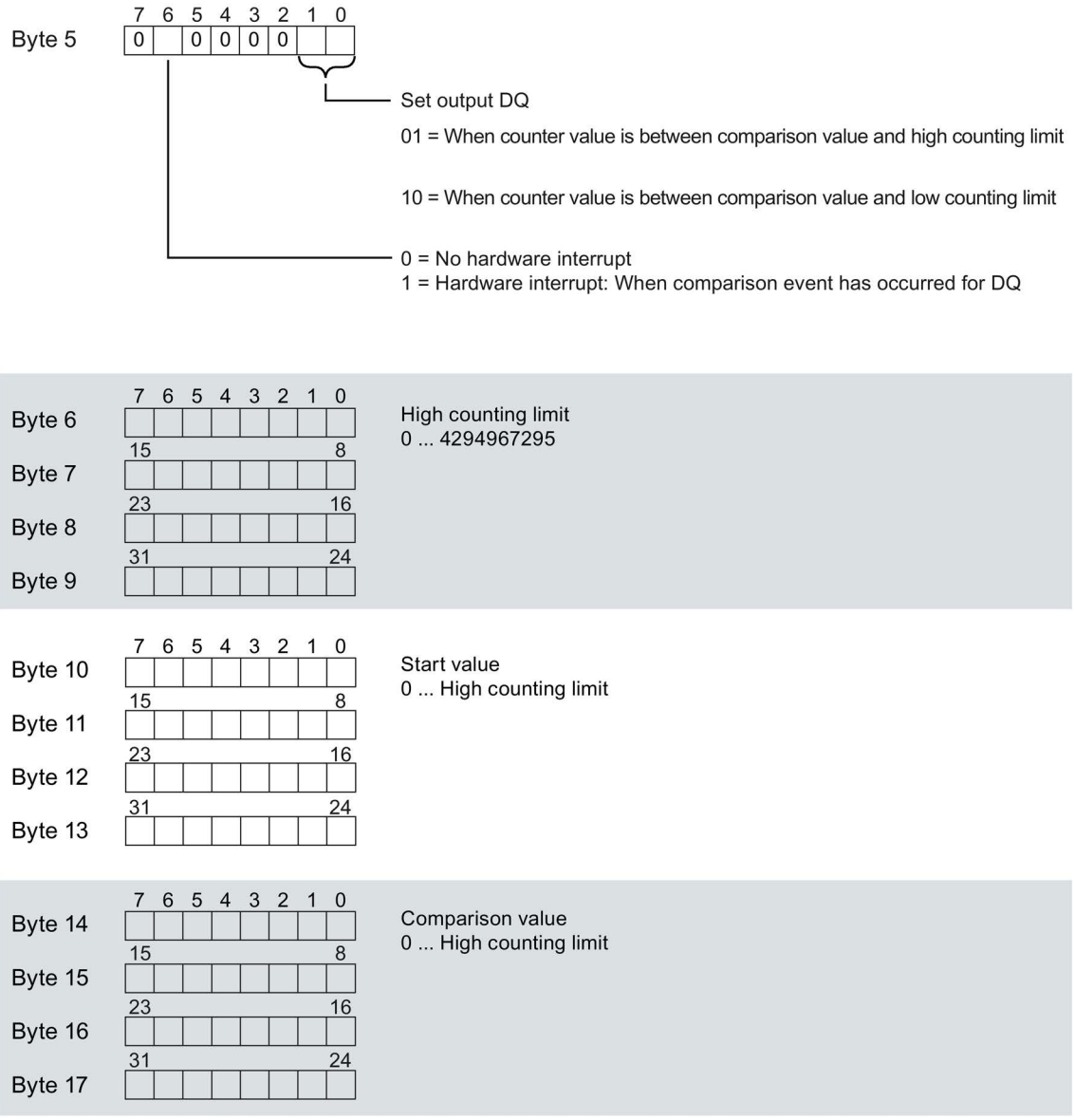

Figure B-3 Structure of data record 0: Bytes 5 to 17

Keep in mind that the counter is stopped and reset to the start value when you change count parameters.
Changing the parameters "Diagnostics" and "Hardware interrupts" does not have an effect on the counter.

Structure of data records 2 to 15

The structure of data records 2 to 15 for channels 2 to 15 is identical to the structure in the DI mode, see section Structure of the parameter data records DI mode (Page 48), figure Structure of data record 0: Bytes 0 to 3.

Open Source Software

C

For resellers: In order to avoid infringements of the license conditions by the reseller or the buyer, these instructions and license conditions have to be forwarded to the buyers.

License Conditions and Disclaimers for Open Source Software and other Licensed Software

In the product "Digital Modules, Analog Modules, Technological Modules, Communication Modules and Power Supply Modules of the SIMATIC S7-1500, ET 200MP", Copyright Siemens AG, 2013 - 2014 (hereinafter "Product"), the following Open Source Software is used either unchanged or in a form that we have modified, and additionally the other License Software noted below.

Liability for Open Source Software

Open Source Software is provided free of charge. We are liable for the Product including Open Source Software contained in accordance with the license conditions applicable to the Product. Any liability for use of Open Source Software beyond the program flow intended for the Product is explicitly excluded.

We do not provide any technical support for the Product if it has been modified.

Please read the license conditions and copyright notes for Open Source Software as well as other licensed software:

Component	Open Source Software [Yes/No]	Acknow-ledgements	Copyright Information / File
Dinkumware C/C++ Library - 5.01	NO		LICENSE AND COPYRIGHT INFORMATION FOR COMPONENT DINKUMWARE C/C++ LIBRARY - 5.01
GNU GCC libgcc - 4.3.2	YES		LICENSE AND COPYRIGHT INFORMATION FOR COMPONENT GNU GCC LIBGCC - 4.3.2
GNU GCC libstdc++ / libsupc++ - 4.3.2	YES		LICENSE AND COPYRIGHT INFORMATION FOR COMPONENT GNU GCC LIBSTDC++ / LIBSUPC++ - 4.3.2

LICENSE CONDITIONS AND COPYRIGHT NOTICES

Commercial Software: Dinkumware C/C++ Library - 5.01
Enclosed you'll find the license conditions and copyright notices applicable for Commercial Software Dinkumware C/C++ Library - 5.01

License conditions:

Copyright (c) 1991-1999 Unicode, Inc. All Rights reserved.
This file is provided as-is by Unicode, Inc. (The Unicode Consortium). No claims are made as to fitness for any particular purpose. No warranties of any kind are expressed or implied. The recipient agrees to determine applicability of information provided. If this file has been provided on optical media by Unicode, Inc., the sole remedy for any claim will be exchange of defective media within 90 days of receipt. Unicode, Inc. hereby grants the right to freely use the information supplied in this file in the creation of products supporting the Unicode Standard, and to make copies of this file in any form for internal or external distribution as long as this notice remains attached.

© Copyright William E. Kempf 2001 Permission to use, copy, modify, distribute and sell this software and its documentation for any purpose is hereby granted without fee, provided that the above copyright notice appear in all copies and that both that copyright notice and this permission notice appear in supporting documentation. William E. Kempf makes no representations about the suitability of this software for any purpose. It is provided "as is" without express or implied warranty.

Copyright © 1994 Hewlett-Packard Company Permission to use, copy, modify, distribute and sell this software and its documentation for any purpose is hereby granted without fee, provided that the above copyright notice appear in all copies and that both that copyright notice and this permission notice appear in supporting documentation. Hewlett-Packard Company makes no representations about the suitability of this software for any purpose. It is provided ``as is'' without express or implied warranty.

Copyrights:

Copyright 1992 - 2006 by p.j. plauger and jim brodie. all rights reserved.

Copyright 1992-2006 by p.j. plauger. all rights reserved.ip

Copyright 1992-2006 by p.j. plauger. portions derived from work copyright 1994 by hewlettpackard company. all rights reserved

Copyright 1992-2006 by dinkumware, ltd. all rights reserved

Copyright 1992-2006 by dinkumware, ltd. portions derived from work copyright 2001 by william e. kempf. all rights reserved

Copyright 1994 hewlettpackard company

Copyright 1994 by hewlettpackard company

Copyright william e. kempf 2001

Copyright 1989-2006 by p.j. plauger. all rights reserved

Copyright (c) by p.j. plauger. all rights reserved.

Copyright (c) by dinkumware, ltd. all rights reserved.

Copyright (c) unicode, inc. all rights reserved.

(c) Copyright william e. kempf 2001

Copyright (c) hewlettpackard company

Copyright (c) by p.j. plauger. all rights reserved.

Copyright 2006 by dinkumware, ltd.

copyright (c) by p.j. plauger, licensed by dinkumware, ltd. all rights reserved.

the dinkum cec++ library reference is copyright (c) by p.j. plauger. this code is protected by copyright. all rights reserved.

the dinkum cc++ library reference is copyright (c) by p.j. plauger. this code is protected by copyright. all rights reserved.

dinkum compleat library, vc++ package (vc++ compilers only) the dinkum compleat library and the dinkum compleat library reference are copyright (c) by p.j. plauger. all rights reserved.

LICENSE CONDITIONS AND COPYRIGHT NOTICES

Open Source Software: GNU GCC libgcc - 4.3.2
Enclosed you'll find the license conditions and copyright notices applicable for Open Source Software GNU GCC libgcc - 4.3.2

License conditions:

GCC is free software; you can redistribute it and/or modify it under the terms of the GNU General Public License as published by the Free Software Foundation; either version 2, or (at your option) any later version.

In addition to the permissions in the GNU General Public License, the Free Software Foundation gives you unlimited permission to link the compiled version of this file into combinations with other programs, and to distribute those combinations without any restriction coming from the use of this file. (The General Public License restrictions do apply in other respects; for example, they cover modification of the file, and distribution when not linked into a combine executable.)

GCC is distributed in the hope that it will be useful, but WITHOUT ANY WARRANTY; without even the implied warranty of MERCHANTABILITY or FITNESS FOR A PARTICULAR PURPOSE. See the GNU General Public License for more details

You should have received a copy of the GNU General Public License along with GCC; see the file COPYING. If not, write to the Free Software Foundation, 51 Franklin Street, Fifth Floor, Boston, MA

GNU GENERAL PUBLIC LICENSE
Version 2, June 1991

Copyright (C) 1989, 1991 Free Software Foundation, Inc.

59 Temple Place, Suite 330, Boston, MA 02111-1307 USA

Everyone is permitted to copy and distribute verbatim copies of this license document, but changing it is not allowed.

Preamble

The licenses for most software are designed to take away your freedom to share and change it. By contrast, the GNU General Public License is intended to guarantee your freedom to share and change free software--to make sure the software is free for all its users. This General Public License applies to most of the Free Software Foundation's software and to any other program whose authors commit to using it. (Some other Free Software Foundation software is covered by the GNU Library General Public License instead.) You can apply it to your programs, too.

When we speak of free software, we are referring to freedom, not price. Our General Public Licenses are designed to make sure that you have the freedom to distribute copies of free software (and charge for this service if you wish), that you receive source code or can get it if you want it, that you can change the software or use pieces of it in new free programs; and that you know you can do these things.

To protect your rights, we need to make restrictions that forbid anyone to deny you these rights or to ask you to surrender the rights. These restrictions translate to certain responsibilities for you if you distribute copies of the software, or if you modify it.

For example, if you distribute copies of such a program, whether gratis or for a fee, you must give the recipients all the rights that you have. You must make sure that they, too, receive or can get the source code. And you must show them these terms so they know their rights.

We protect your rights with two steps: (1) copyright the software, and (2) offer you this license which gives you legal permission to copy, distribute and/or modify the software.

Also, for each author's protection and ours, we want to make certain that everyone understands that there is no warranty for this free software. If the software is modified by someone else and passed on, we want its recipients to know that what they have is not the original, so that any problems introduced by others will not reflect on the original authors' reputations.

Finally, any free program is threatened constantly by software patents. We wish to avoid the danger that redistributors of a free program will individually obtain patent licenses, in effect making the program proprietary. To prevent this, we have made it clear that any patent must be licensed for everyone's free use or not licensed at all.

The precise terms and conditions for copying, distribution and modification follow.

GNU GENERAL PUBLIC LICENSE
TERMS AND CONDITIONS FOR COPYING, DISTRIBUTION AND MODIFICATION

0. This License applies to any program or other work which contains a notice placed by the copyright holder saying it may be distributed under the terms of this General Public License. The "Program", below, refers to any such program or work, and a "work based on the Program" means either the Program or any derivative work under copyright law: that is to say, a work containing the Program or a portion of it, either verbatim or with modifications and/or translated into another language. (Hereinafter, translation is included without limitation in the term "modification".) Each licensee is addressed as "you".

Activities other than copying, distribution and modification are not covered by this License; they are outside its scope. The act of running the Program is not restricted, and the output from the Program is covered only if its contents constitute a work based on the Program (independent of having been made by running the Program). Whether that is true depends on what the Program does.

1. You may copy and distribute verbatim copies of the Program's source code as you receive it, in any medium, provided that you conspicuously and appropriately publish on each copy an appropriate copyright notice and disclaimer of warranty; keep intact all the notices that refer to this License and to the absence of any warranty; and give any other recipients of the Program a copy of this License along with the Program.

You may charge a fee for the physical act of transferring a copy, and you may at your option offer warranty protection in exchange for a fee.

2. You may modify your copy or copies of the Program or any portion of it, thus forming a work based on the Program, and copy and distribute such modifications or work under the terms of Section 1 above, provided that you also meet all of these conditions:

a) You must cause the modified files to carry prominent notices stating that you changed the files and the date of any change.

b) You must cause any work that you distribute or publish, that in whole or in part contains or is derived from the Program or any part thereof, to be licensed as a whole at no charge to all third parties under the terms of this License.

c) If the modified program normally reads commands interactively when run, you must cause it, when started running for such interactive use in the most ordinary way, to print or display an announcement including an appropriate copyright notice and a notice that there is no warranty (or else, saying that you provide a warranty) and that users may redistribute the program under these conditions, and telling the user how to view a copy of this License. (Exception: if the Program itself is interactive but does not normally print such an announcement, your work based on the Program is not required to print an announcement.)

These requirements apply to the modified work as a whole. If identifiable sections of that work are not derived from the Program, and can be reasonably considered independent and separate works in themselves, then this License, and its terms, do not apply to those sections when you distribute them as separate works. But when you distribute the same sections as part of a whole which is a work based on the Program, the distribution of the whole must be on the terms of this License, whose permissions for other licensees extend to the entire whole, and thus to each and every part regardless of who wrote it.

Thus, it is not the intent of this section to claim rights or contest your rights to work written entirely by you; rather, the intent is to exercise the right to control the distribution of derivative or collective works based on the Program.

In addition, mere aggregation of another work not based on the Program with the Program (or with a work based on the Program) on a volume of a storage or distribution medium does not bring the other work under the scope of this License.

3. You may copy and distribute the Program (or a work based on it, under Section 2) in object code or executable form under the terms of Sections 1 and 2 above provided that you also do one of the following:

a) Accompany it with the complete corresponding machine-readable source code, which must be distributed under the terms of Sections 1 and 2 above on a medium customarily used for software interchange; or,

b) Accompany it with a written offer, valid for at least three years, to give any third party, for a charge no more than your cost of physically performing source distribution, a complete machine-readable copy of the corresponding source code, to be distributed under the terms of Sections 1 and 2 above on a medium customarily used for software interchange; or,

c) Accompany it with the information you received as to the offer to distribute corresponding source code. (This alternative is allowed only for noncommercial distribution and only if you received the program in object code or executable form with such an offer, in accord with Subsection b above.)

The source code for a work means the preferred form of the work for making modifications to it. For an executable work, complete source code means all the source code for all modules it contains, plus any associated interface definition files, plus the scripts used to control compilation and installation of the executable. However, as a special exception, the source code distributed need not include anything that is normally distributed (in either source or binary form) with the major components (compiler, kernel, and so on) of the operating system on which the executable runs, unless that component itself accompanies the executable.

If distribution of executable or object code is made by offering access to copy from a designated place, then offering equivalent access to copy the source code from the same place counts as distribution of the source code, even though third parties are not compelled to copy the source along with the object code.

4. You may not copy, modify, sublicense, or distribute the Program except as expressly provided under this License. Any attempt otherwise to copy, modify, sublicense or distribute the Program is void, and will automatically terminate your rights under this License. However, parties who have received copies, or rights, from you under this License will not have their licenses terminated so long as such parties remain in full compliance.

5. You are not required to accept this License, since you have not signed it. However, nothing else grants you permission to modify or distribute the Program or its derivative works. These actions are prohibited by law if you do not accept this License. Therefore, by modifying or distributing the Program (or any work based on the Program), you indicate your acceptance of this License to do so, and all its terms and conditions for copying, distributing or modifying the Program or works based on it.

6. Each time you redistribute the Program (or any work based on the Program), the recipient automatically receives a license from the original licensor to copy, distribute or modify the Program subject to these terms and conditions. You may not impose any further restrictions on the recipients' exercise of the rights granted herein. You are not responsible for enforcing compliance by third parties to this License.

7. If, as a consequence of a court judgment or allegation of patent infringement or for any other reason (not limited to patent issues), conditions are imposed on you (whether by court order, agreement or otherwise) that contradict the conditions of this License, they do not excuse you from the conditions of this License. If you cannot distribute so as to satisfy simultaneously your obligations under this License and any other pertinent obligations, then as a consequence you may not distribute the Program at all. For example, if a patent license would not permit royalty-free redistribution of the Program by all those who receive copies directly or indirectly through you, then the only way you could satisfy both it and this License would be to refrain entirely from distribution of the Program.

If any portion of this section is held invalid or unenforceable under any particular circumstance, the balance of the section is intended to apply and the section as a whole is intended to apply in other circumstances.

It is not the purpose of this section to induce you to infringe any patents or other property right claims or to contest validity of any such claims; this section has the sole purpose of protecting the integrity of the free software distribution system, which is implemented by public license practices.

Many people have made generous contributions to the wide range of software distributed through that system in reliance on consistent application of that system; it is up to the author/donor to decide if he or she is willing to distribute software through any other system and a licensee cannot impose that choice.

This section is intended to make thoroughly clear what is believed to be a consequence of the rest of this License.

8. If the distribution and/or use of the Program is restricted in certain countries either by patents or by copyrighted interfaces, the original copyright holder who places the Program under this License may add an explicit geographical distribution limitation excluding those countries, so that distribution is permitted only in or among countries not thus excluded. In such case, this License incorporates the limitation as if written in the body of this License.

9. The Free Software Foundation may publish revised and/or new versions of the General Public License from time to time. Such new versions will be similar in spirit to the present version, but may differ in detail to address new problems or concerns.

Each version is given a distinguishing version number. If the Program specifies a version number of this License which applies to it and "any later version", you have the option of following the terms and conditions either of that version or of any later version published by the Free Software Foundation. If the Program does not specify a version number of this License, you may choose any version ever published by the Free Software Foundation.

10. If you wish to incorporate parts of the Program into other free programs whose distribution conditions are different, write to the author to ask for permission. For software which is copyrighted by the Free Software Foundation, write to the Free Software Foundation; we sometimes make exceptions for this. Our decision will be guided by the two goals of preserving the free status of all derivatives of our free software and of promoting the sharing and reuse of software generally.

NO WARRANTY

11. BECAUSE THE PROGRAM IS LICENSED FREE OF CHARGE, THERE IS NO WARRANTY FOR THE PROGRAM, TO THE EXTENT PERMITTED BY APPLICABLE LAW. EXCEPT WHEN OTHERWISE STATED IN WRITING THE COPYRIGHT HOLDERS AND/OR OTHER PARTIES PROVIDE THE PROGRAM "AS IS" WITHOUT WARRANTY OF ANY KIND, EITHER EXPRESSED OR IMPLIED, INCLUDING, BUT NOT LIMITED TO, THE IMPLIED WARRANTIES OF MERCHANTABILITY AND FITNESS FOR A PARTICULAR PURPOSE. THE ENTIRE RISK AS TO THE QUALITY AND PERFORMANCE OF THE PROGRAM IS WITH YOU. SHOULD THE PROGRAM PROVE DEFECTIVE, YOU ASSUME THE COST OF ALL NECESSARY SERVICING, REPAIR OR CORRECTION.

12. IN NO EVENT UNLESS REQUIRED BY APPLICABLE LAW OR AGREED TO IN WRITING WILL ANY COPYRIGHT HOLDER, OR ANY OTHER PARTY WHO MAY MODIFY AND/OR REDISTRIBUTE THE PROGRAM AS PERMITTED ABOVE, BE LIABLE TO YOU FOR DAMAGES, INCLUDING ANY GENERAL, SPECIAL, INCIDENTAL OR CONSEQUENTIAL DAMAGES ARISING OUT OF THE USE OR INABILITY TO USE THE PROGRAM (INCLUDING BUT NOT LIMITED TO LOSS OF DATA OR DATA BEING RENDERED INACCURATE OR LOSSES SUSTAINED BY YOU OR THIRD PARTIES OR A FAILURE OF THE PROGRAM TO OPERATE WITH ANY OTHER PROGRAMS), EVEN IF SUCH HOLDER OR OTHER PARTY HAS BEEN ADVISED OF THE POSSIBILITY OF SUCH DAMAGES

END OF TERMS AND CONDITIONS

How to Apply These Terms to Your New Programs

If you develop a new program, and you want it to be of the greatest possible use to the public, the best way to achieve this is to make it free software which everyone can redistribute and change under these terms.

To do so, attach the following notices to the program. It is safest to attach them to the start of each source file to most effectively convey the exclusion of warranty; and each file should have at least the "copyright" line and a pointer to where the full notice is found. <one line to give the program's name and a brief idea of what it does.> Copyright (C) <year> <name of author>

This program is free software; you can redistribute it and/or modify it under the terms of the GNU General Public License as published by the Free Software Foundation; either version 2 of the License, or (at your option) any later version.

This program is distributed in the hope that it will be useful, but WITHOUT ANY WARRANTY; without even the implied warranty of MERCHANTABILITY or FITNESS FOR A PARTICULAR PURPOSE. See the GNU General Public License for more details.

You should have received a copy of the GNU General Public License along with this program; if not, write to the Free Software Foundation, Inc., 59 Temple Place, Suite 330, Boston, MA 02111-1307 USA

Also add information on how to contact you by electronic and paper mail.

If the program is interactive, make it output a short notice like this when it starts in an interactive mode:

Gnomovision version 69, Copyright (C) year name of author Gnomovision comes with ABSOLUTELY NO WARRANTY; for details type `show w'. This is free software, and you are welcome to redistribute it under certain conditions; type `show c' for details.

The hypothetical commands `show w' and `show c' should show the appropriate parts of the General Public License. Of course, the commands you use may be called something other than `show w' and `show c'; they could even be mouse-clicks or menu items--whatever suits your program.

You should also get your employer (if you work as a programmer) or your school, if any, to sign a "copyright disclaimer" for the program, if necessary. Here is a sample; alter the names:
Yoyodyne, Inc., hereby disclaims all copyright interest in the program `Gnomovision' (which makes passes at compilers) written by James Hacker.

<signature of Ty Coon>, 1 April 1989
Ty Coon, President of Vice

This General Public License does not permit incorporating your program into proprietary programs. If your program is a subroutine library, you may consider it more useful to permit linking proprietary applications with the library. If this is what you want to do, use the GNU Library General Public License instead of this License.

Copyrights:

Copyright (C) 2003 Free Software Foundation, Inc.

Copyright (C) 2005, 2006 Free Software Foundation

Copyright (C) 2007 Free Software Foundation, Inc.

Copyright 1997, 1998, 1999, 2000, 2001, 2002, 2003, 2004, 2005, 2006, 2007, # 2008 Free Software Foundation, Inc.

LICENSE CONDITIONS AND COPYRIGHT NOTICES

Open Source Software: GNU GCC libstdc++ / libsupc++ - 4.3.2

Enclosed you'll find the license conditions and copyright notices applicable for Open Source Software GNU GCC libstdc++ / libsupc++ - 4.3.2

License conditions:

GCC is free software; you can redistribute it and/or modify it under the terms of the GNU General Public License as published by the Free Software Foundation; either version 2, or (at your option) any later version.
GCC is distributed in the hope that it will be useful, but WITHOUT ANY WARRANTY; without even the implied warranty of MERCHANTABILITY or FITNESS FOR A PARTICULAR PURPOSE. See the GNU General Public License for more details. You should have received a copy of the GNU General Public License along with GCC; see the file COPYING. If not, write to the Free Software Foundation, 51 Franklin Street, Fifth Floor, Boston, MA 02110-1301, USA.
As a special exception, you may use this file as part of a free software library without restriction. Specifically, if other files instantiate templates or use macros or inline functions from this file, or you compile this file and link it with other files to produce an executable, this file does not by itself cause the resulting executable to be covered by the GNU General Public License. This exception does not however invalidate any other reasons why the executable file might be covered by the GNU General Public License.

This library is free software; you can redistribute it and/or modify it under the terms of the GNU General Public License as published by the Free Software Foundation; either version 2, or (at your option) any later version.

This library is distributed in the hope that it will be useful, but WITHOUT ANY WARRANTY; without even the implied warranty of MERCHANTABILITY or FITNESS FOR A PARTICULAR PURPOSE. See the GNU General Public License for more details.

You should have received a copy of the GNU General Public License along with this library; see the file COPYING. If not, write to the Free Software Foundation, 51 Franklin Street, Fifth Floor, Boston, MA 02110-1301, USA.

As a special exception, you may use this file as part of a free software library without restriction. Specifically, if other files instantiate templates or use macros or inline functions from this file, or you compile this file and link it with other files to produce an executable, this file does not by itself cause the resulting executable to be covered by the GNU General Public License. This exception does not however invalidate any other reasons why the executable file might be covered by the GNU General Public License.

This library is free software; you can redistribute it and/or modify it under the terms of the GNU General Public License as published by the Free Software Foundation; either version 2, or (at your option) any later version. This library is distributed in the hope that it will be useful, but WITHOUT ANY WARRANTY; without even the implied warranty of MERCHANTABILITY or FITNESS FOR A PARTICULAR PURPOSE. See the GNU General Public License for more details. You should have received a copy of the GNU General Public License along with this library; see the file COPYING. If not, write to the Free Software Foundation, 59 Temple Place - Suite 330, Boston, MA 02111-1307, USA.
As a special exception, you may use this file as part of a free software library without restriction. Specifically, if other files instantiate templates or use macros or inline functions from this file, or you compile this file and link it with other files to produce an executable, this file does not by itself cause the resulting executable to be covered by the GNU General Public License. This exception does not however invalidate any other reasons why the executable file might be covered by the GNU General Public License. ---

GNU GENERAL PUBLIC LICENSE Version 2, June 1991

Copyright (C) 1989, 1991 Free Software Foundation, Inc.

59 Temple Place, Suite 330, Boston, MA 02111-1307 USA

Everyone is permitted to copy and distribute verbatim copies of this license document, but changing it is not allowed.

Preamble

The licenses for most software are designed to take away your freedom to share and change it. By contrast, the GNU General Public License is intended to guarantee your freedom to share and change free software--to make sure the software is free for all its users. This General Public License applies to most of the Free Software Foundation's software and to any other program whose authors commit to using it. (Some other Free Software Foundation software is covered by the GNU Library General Public License instead.) You can apply it to your programs, too.

When we speak of free software, we are referring to freedom, not price. Our General Public Licenses are designed to make sure that you have the freedom to distribute copies of free software (and charge for this service if you wish), that you receive source code or can get it if you want it, that you can change the software or use pieces of it in new free programs; and that you know you can do these things.

To protect your rights, we need to make restrictions that forbid anyone to deny you these rights or to ask you to surrender the rights. These restrictions translate to certain responsibilities for you if you distribute copies of the software, or if you modify it.

For example, if you distribute copies of such a program, whether gratis or for a fee, you must give the recipients all the rights that you have. You must make sure that they, too, receive or can get the source code. And you must show them these terms so they know their rights. We protect your rights with two steps: (1) copyright the software, and (2) offer you this license which gives you legal permission to copy, distribute and/or modify the software.

Also, for each author's protection and ours, we want to make certain that everyone understands that there is no warranty for this free software. If the software is modified by someone else and passed on, we want its recipients to know that what they have is not the original, so that any problems introduced by others will not reflect on the original authors' reputations.

Finally, any free program is threatened constantly by software patents. We wish to avoid the danger that redistributors of a free program will individually obtain patent licenses, in effect making the program proprietary. To prevent this, we have made it clear that any patent must be licensed for everyone's free use or not licensed at all.

The precise terms and conditions for copying, distribution and modification follow.

GNU GENERAL PUBLIC LICENSE
TERMS AND CONDITIONS FOR COPYING, DISTRIBUTION AND MODIFICATION

0. This License applies to any program or other work which contains a notice placed by the copyright holder saying it may be distributed under the terms of this General Public License. The "Program", below, refers to any such program or work, and a "work based on the Program" means either the Program or any derivative work under copyright law: that is to say, a work containing the Program or a portion of it, either verbatim or with modifications and/or translated into another language. (Hereinafter, translation is included without limitation in the term "modification".) Each licensee is addressed as "you".

Activities other than copying, distribution and modification are not covered by this License; they are outside its scope. The act of running the Program is not restricted, and the output from the Program is covered only if its contents constitute a work based on the Program (independent of having been made by running the Program). Whether that is true depends on what the Program does.

1. You may copy and distribute verbatim copies of the Program's source code as you receive it, in any medium, provided that you conspicuously and appropriately publish on each copy an appropriate copyright notice and disclaimer of warranty; keep intact all the notices that refer to this License and to the absence of any warranty; and give any other recipients of the Program a copy of this License along with the Program. You may charge a fee for the physical act of transferring a copy, and you may at your option offer warranty protection in exchange for a fee.

2. You may modify your copy or copies of the Program or any portion of it, thus forming a work based on the Program, and copy and distribute such modifications or work under the terms of Section 1 above, provided that you also meet all of these conditions:

a) You must cause the modified files to carry prominent notices stating that you changed the files and the date of any change.

b) You must cause any work that you distribute or publish, that in whole or in part contains or is derived from the Program or any part thereof, to be licensed as a whole at no charge to all third parties under the terms of this License.

c) If the modified program normally reads commands interactively when run, you must cause it, when started running for such interactive use in the most ordinary way, to print or display an announcement including an appropriate copyright notice and a notice that there is no warranty (or else, saying that you provide a warranty) and that users may redistribute the program under these conditions, and telling the user how to view a copy of this License. (Exception: if the Program itself is interactive but does not normally print such an announcement, your work based on the Program is not required to print an announcement.)

These requirements apply to the modified work as a whole. If identifiable sections of that work are not derived from the Program, and can be reasonably considered independent and separate works in themselves, then this License, and its terms, do not apply to those sections when you distribute them as separate works. But when you distribute the same sections as part of a whole which is a work based on the Program, the distribution of the whole must be on the terms of this License, whose permissions for other licensees extend to the entire whole, and thus to each and every part regardless of who wrote it.

Thus, it is not the intent of this section to claim rights or contest your rights to work written entirely by you; rather, the intent is to exercise the right to control the distribution of derivative or collective works based on the Program.

In addition, mere aggregation of another work not based on the Program with the Program (or with a work based on the Program) on a volume of a storage or distribution medium does not bring the other work under the scope of this License.

3. You may copy and distribute the Program (or a work based on it, under Section 2) in object code or executable form under the terms of Sections 1 and 2 above provided that you also do one of the following:

a) Accompany it with the complete corresponding machine-readable source code, which must be distributed under the terms of Sections 1 and 2 above on a medium customarily used for software interchange; or,

b) Accompany it with a written offer, valid for at least three years, to give any third party, for a charge no more than your cost of physically performing source distribution, a complete machine-readable copy of the corresponding source code, to be distributed under the terms of Sections 1 and 2 above on a medium customarily used for software interchange; or,

c) Accompany it with the information you received as to the offer to distribute corresponding source code. (This alternative is allowed only for noncommercial distribution and only if you received the program in object code or executable form with such an offer, in accord with Subsection b above.)

The source code for a work means the preferred form of the work for making modifications to it. For an executable work, complete source code means all the source code for all modules it contains, plus any associated interface definition files, plus the scripts used to control compilation and installation of the executable. However, as a special exception, the source code distributed need not include anything that is normally distributed (in either source or binary form) with the major components (compiler, kernel, and so on) of the operating system on which the executable runs, unless that component itself accompanies the executable.

If distribution of executable or object code is made by offering access to copy from a designated place, then offering equivalent access to copy the source code from the same place counts as distribution of the source code, even though third parties are not compelled to copy the source along with the object code.

4. You may not copy, modify, sublicense, or distribute the Program except as expressly provided under this License. Any attempt otherwise to copy, modify, sublicense or distribute the Program is void, and will automatically terminate your rights under this License. However, parties who have received copies, or rights, from you under this License will not have their licenses terminated so long as such parties remain in full compliance.

5. You are not required to accept this License, since you have not signed it. However, nothing else grants you permission to modify or distribute the Program or its derivative works. These actions are prohibited by law if you do not accept this License. Therefore, by modifying or distributing the Program (or any work based on the Program), you indicate your acceptance of this License to do so, and all its terms and conditions for copying, distributing or modifying the Program or works based on it.

6. Each time you redistribute the Program (or any work based on the Program), the recipient automatically receives a license from the original licensor to copy, distribute or modify the Program subject to these terms and conditions. You may not impose any further restrictions on the recipients' exercise of the rights granted herein. You are not responsible for enforcing compliance by third parties to this License.

7. If, as a consequence of a court judgment or allegation of patent infringement or for any other reason (not limited to patent issues), conditions are imposed on you (whether by court order, agreement or otherwise) that contradict the conditions of this License, they do not excuse you from the conditions of this License. If you cannot distribute so as to satisfy simultaneously your obligations under this License and any other pertinent obligations, then as a consequence you may not distribute the Program at all. For example, if a patent license would not permit royalty-free redistribution of the Program by all those who receive copies directly or indirectly through you, then the only way you could satisfy both it and this License would be to refrain entirely from distribution of the Program.

If any portion of this section is held invalid or unenforceable under any particular circumstance, the balance of the section is intended to apply and the section as a whole is intended to apply in other circumstances.

It is not the purpose of this section to induce you to infringe any patents or other property right claims or to contest validity of any such claims; this section has the sole purpose of protecting the integrity of the free software distribution system, which is implemented by public license practices.

Many people have made generous contributions to the wide range of software distributed through that system in reliance on consistent application of that system; it is up to the author/donor to decide if he or she is willing to distribute software through any other system and a licensee cannot impose that choice.

This section is intended to make thoroughly clear what is believed to be a consequence of the rest of this License.

8. If the distribution and/or use of the Program is restricted in certain countries either by patents or by copyrighted interfaces, the original copyright holder who places the Program under this License may add an explicit geographical distribution limitation excluding those countries, so that distribution is permitted only in or among countries not thus excluded. In such case, this License incorporates the limitation as if written in the body of this License.

9. The Free Software Foundation may publish revised and/or new versions of the General Public License from time to time. Such new versions will be similar in spirit to the present version, but may differ in detail to address new problems or concerns.

Each version is given a distinguishing version number. If the Program specifies a version number of this License which applies to it and "any later version", you have the option of following the terms and conditions either of that version or of any later version published by the Free Software Foundation. If the Program does not specify a version number of this License, you may choose any version ever published by the Free Software Foundation.

10. If you wish to incorporate parts of the Program into other free programs whose distribution conditions are different, write to the author to ask for permission. For software which is copyrighted by the Free Software Foundation, write to the Free Software Foundation; we sometimes make exceptions for this. Our decision will be guided by the two goals of preserving the free status of all derivatives of our free software and of promoting the sharing and reuse of software generally.

NO WARRANTY

11. BECAUSE THE PROGRAM IS LICENSED FREE OF CHARGE, THERE IS NO WARRANTY FOR THE PROGRAM, TO THE EXTENT PERMITTED BY APPLICABLE LAW. EXCEPT WHEN OTHERWISE STATED IN WRITING THE COPYRIGHT HOLDERS AND/OR OTHER PARTIES PROVIDE THE PROGRAM "AS IS" WITHOUT WARRANTY OF ANY KIND, EITHER EXPRESSED OR IMPLIED, INCLUDING, BUT NOT LIMITED TO, THE IMPLIED WARRANTIES OF MERCHANTABILITY AND FITNESS FOR A PARTICULAR PURPOSE. THE ENTIRE RISK AS TO THE QUALITY AND PERFORMANCE OF THE PROGRAM IS WITH YOU. SHOULD THE PROGRAM PROVE DEFECTIVE, YOU ASSUME THE COST OF ALL NECESSARY SERVICING, REPAIR OR CORRECTION.

12. IN NO EVENT UNLESS REQUIRED BY APPLICABLE LAW OR AGREED TO IN WRITING WILL ANY COPYRIGHT HOLDER, OR ANY OTHER PARTY WHO MAY MODIFY AND/OR REDISTRIBUTE THE PROGRAM AS PERMITTED ABOVE, BE LIABLE TO YOU FOR DAMAGES, INCLUDING ANY GENERAL, SPECIAL, INCIDENTAL OR CONSEQUENTIAL DAMAGES ARISING OUT OF THE USE OR INABILITY TO USE THE PROGRAM (INCLUDING BUT NOT LIMITED TO LOSS OF DATA OR DATA BEING RENDERED INACCURATE OR LOSSES SUSTAINED BY YOU OR THIRD PARTIES OR A FAILURE OF THE PROGRAM TO OPERATE WITH ANY OTHER PROGRAMS), EVEN IF SUCH HOLDER OR OTHER PARTY HAS BEEN ADVISED OF THE POSSIBILITY OF SUCH DAMAGES.

END OF TERMS AND CONDITIONS

How to Apply These Terms to Your New Programs

If you develop a new program, and you want it to be of the greatest possible use to the public, the best way to achieve this is to make it free software which everyone can redistribute and change under these terms.

To do so, attach the following notices to the program. It is safest to attach them to the start of each source file to most effectively convey the exclusion of warranty; and each file should have at least the "copyright" line and a pointer to where the full notice is found.

<one line to give the program's name and a brief idea of what it does.> Copyright (C) <year> <name of author>

This program is free software; you can redistribute it and/or modify it under the terms of the GNU General Public License as published by the Free Software Foundation; either version 2 of the License, or (at your option) any later version.

This program is distributed in the hope that it will be useful, but WITHOUT ANY WARRANTY; without even the implied warranty of MERCHANTABILITY or FITNESS FOR A PARTICULAR PURPOSE. See the GNU General Public License for more details.

You should have received a copy of the GNU General Public License along with this program; if not, write to the Free Software Foundation, Inc., 59 Temple Place, Suite 330, Boston, MA 02111-1307 USA

Also add information on how to contact you by electronic and paper mail.

If the program is interactive, make it output a short notice like this when it starts in an interactive mode:

Gnomovision version 69, Copyright (C) year name of author
Gnomovision comes with ABSOLUTELY NO WARRANTY; for details type `show w'. This is free software, and you are welcome to redistribute it under certain conditions; type `show c' for details.

The hypothetical commands `show w' and `show c' should show the appropriate parts of the General Public License. Of course, the commands you use may be called something other than `show w' and `show c'; they could even be mouse-clicks or menu items--whatever suits your program.

You should also get your employer (if you work as a programmer) or your school, if any, to sign a "copyright disclaimer" for the program, if necessary. Here is a sample; alter the names:

Yoyodyne, Inc., hereby disclaims all copyright interest in the program `Gnomovision' (which makes passes at compilers) written by James Hacker.

<signature of Ty Coon>, 1 April 1989
Ty Coon, President of Vice

This General Public License does not permit incorporating your program into proprietary programs. If your program is a subroutine library, you may consider it more useful to permit linking proprietary applications with the library. If this is what you want to do, use the GNU Library General Public License instead of this License.

Distributed under the Boost
Software License, Version 1.0.
(See accompanying file LICENSE_1_0.txt or copy at
http:www.boost.org/LICENSE_1_0.txt)

Boost Software License - Version 1.0 - August 17th, 2003

Permission is hereby granted, free of charge, to any person or organization obtaining a copy of the software and accompanying documentation covered by this license (the "Software") to use, reproduce, display, distribute, execute, and transmit the Software, and to prepare derivative works of the Software, and to permit third-parties to whom the Software is furnished to do so, all subject to the following:

The copyright notices in the Software and this entire statement, including the above license grant, this restriction and the following disclaimer, must be included in all copies of the Software, in whole or in part, and all derivative works of the Software, unless such copies or derivative works are solely in the form of machine-executable object code generated by a source language processor.

THE SOFTWARE IS PROVIDED "AS IS", WITHOUT WARRANTY OF ANY KIND, EXPRESS OR IMPLIED, INCLUDING BUT NOT LIMITED TO THE WARRANTIES OF MERCHANTABILITY, FITNESS FOR A PARTICULAR PURPOSE, TITLE AND NON-INFRINGEMENT. IN NO EVENT SHALL THE COPYRIGHT HOLDERS OR ANYONE DISTRIBUTING THE SOFTWARE BE LIABLE FOR ANY DAMAGES OR OTHER LIABILITY, WHETHER IN CONTRACT, TORT OR OTHERWISE, ARISING FROM, OUT OF OR IN CONNECTION WITH THE SOFTWARE OR THE USE OR OTHER DEALINGS IN THE SOFTWARE.

Permission to use, copy, modify, distribute and sell this software and its documentation for any purpose is hereby granted without fee, provided that the above copyright notice appear in all copies and that both that copyright notice and this permission notice appear in supporting documentation. Silicon Graphics makes no representations about the suitability of this software for any purpose. It is provided "as is" without express or implied warranty.

Permission to use, copy, modify, sell, and distribute this software is hereby granted without fee, provided that the above copyright notice appears in all copies, and that both that copyright notice and this permission notice appear in supporting documentation. None of the above authors, nor IBM Haifa Research Laboratories, make any representation about the suitability of this software for any purpose. It is provided "as is" without express or implied warranty.

Permission to use, copy, modify, distribute and sell this software and its documentation for any purpose is hereby granted without fee, provided that the above copyright notice appear in all copies and that both that copyright notice and this permission notice appear in supporting documentation. Hewlett-Packard Company makes no representations about the suitability of this software for any purpose. It is provided "as is" without express or implied warranty.

Copyrights:

(C) Copyright Jeremy Siek 2000.

Copyright © 1994 Hewlett-Packard Company

Copyright © 1998 by Information Technology Industry Council.

Copyright © 2007 Free Software Foundation, Inc.

Copyright (C) Microsoft Corporation 1984-2002. All rights reserved.

Copyright (C) 1994, 1995, 1996, 1997, 1998, 1999, 2000, 2001 // Free Software Foundation

Copyright (C) 1994, 1995, 1996, 1997, 1998, 1999, 2000, 2001, 2002 // Free Software Foundation

Copyright (C) 1994, 1995, 1996, 1997, 1998, 1999, 2000, 2001, 2002, # 2003, 2004, 2005 Free Software Foundation, Inc.

Copyright (C) 1994, 1995, 1996, 1997, 1998, 1999, 2000, 2001, 2002, // 2003, 2004, 2005, 2006, 2007 // Free Software Foundation

Copyright (C) 1994, 1995, 1996, 1997, 1998, 1999, 2000, 2001, 2002, // 2003, 2004, 2005, 2006, 2007 Free Software Foundation, Inc.

Copyright (C) 1994, 1995, 1996, 1998, 1999, 2000, 2001, 2004 // Free Software Foundation

Copyright (C) 1994, 1996, 1997, 1998, 1999, 2000, 2001, 2002 // Free Software Foundation

Copyright (C) 1994, 1996, 1997, 1998, 1999, 2000, 2001, 2002, 2007 // Free Software Foundation

Copyright (C) 1994, 1999, 2000, 2003 Free Software Foundation, Inc.

Copyright (C) 1994, 1999, 2000, 2003, 2005 Free Software Foundation, Inc.

Copyright (C) 1994, 1999, 2001, 2002, 2003 Free Software Foundation, Inc.

Copyright (C) 1994, 1999, 2001, 2003 Free Software Foundation, Inc.

Copyright (C) 1995, 1996, 1997, 1998, 1999, 2000, 2001, 2002, 2003, // 2004, 2005, 2006, 2007 // Free Software Foundation

Copyright (C) 1996, 1997, 1998, 1999, 2000, 2001, 2002, 2003, 2004, # 2005 Free Software Foundation, Inc.

Copyright (C) 1996, 1997, 1998, 1999, 2000, 2001, 2002, 2003, 2004, // 2005, 2006, 2007 // Free Software Foundation

Copyright (C) 1996, 1997, 1998, 1999, 2000, 2001, 2002, 2003, 2004, 2005 # Free Software Foundation, Inc.

Copyright (C) 1996, 1997, 2000, 2001, 2003, 2005 # Free Software Foundation, Inc.

Copyright (C) 1996, 1998, 2000, 2001, 2002, 2003, 2004, 2005 # Free Software Foundation, Inc.

Copyright (C) 1997, 1998, 1999 Free Software Foundation, Inc.

Copyright (C) 1997, 1998, 1999, 2000, 2001, 2002 // Free Software Foundation, Inc.

Copyright (C) 1997, 1998, 1999, 2000, 2001, 2002 // Free Software Foundation, Inc.

Copyright (C) 1997, 1998, 1999, 2000, 2001, 2002 // Free Software Foundation, Inc.

Copyright (C) 1997, 1998, 1999, 2000, 2001, 2002, 2003 ## Free Software Foundation, Inc.

Copyright (C) 1997, 1998, 1999, 2000, 2001, 2002, 2003 // Free Software Foundation, Inc.

Copyright (C) 1997, 1998, 1999, 2000, 2001, 2002, 2003, 2004 // Free Software Foundation, Inc.

Copyright (C) 1997, 1998, 1999, 2000, 2001, 2002, 2003, 2004, // 2005, 2006, 2007 // Free Software Foundation, Inc.

Copyright (C) 1997, 1998, 1999, 2000, 2001, 2002, 2003, 2004, // 2005, 2006, 2007 Free Software Foundation, Inc.

Copyright (C) 1997, 1998, 1999, 2000, 2001, 2002, 2003, 2004, 2005 // 2006, 2007 // Free Software Foundation, Inc.

Copyright (C) 1997, 1998, 1999, 2000, 2001, 2002, 2003, 2004, 2005 // Free Software Foundation, Inc.

Copyright (C) 1997, 1998, 1999, 2000, 2001, 2002, 2003, 2004, 2005, // 2006, 2007 // Free Software Foundation, Inc.

Copyright (C) 1997, 1998, 1999, 2000, 2001, 2002, 2003, 2004, 2005, // 2006, 2007 Free Software Foundation, Inc.

Copyright (C) 1997, 1998, 1999, 2000, 2001, 2002, 2003, 2004, 2005, // 2006, 2007, 2008 // Free Software Foundation, Inc.

Copyright (C) 1997, 1998, 1999, 2000, 2001, 2002, 2003, 2004, 2005, // 2006, 2007, 2008 Free Software Foundation, Inc.

Copyright (C) 1997, 1998, 1999, 2000, 2001, 2002, 2003, 2004, 2005, // 2006, 2008 Free Software Foundation, Inc.

Copyright (C) 1997, 1998, 1999, 2000, 2001, 2002, 2003, 2004, 2005, 2006 // Free Software Foundation, Inc.

Copyright (C) 1997, 1998, 1999, 2000, 2001, 2002, 2003, 2004, 2005, 2006, // 2007 // Free Software Foundation, Inc.

Copyright (C) 1997, 1998, 1999, 2000, 2001, 2002, 2003, 2004, 2005, 2007 // Free Software Foundation, Inc.

Copyright (C) 1997, 1998, 1999, 2000, 2001, 2002, 2003, 2005 ## Free Software Foundation, Inc.

Copyright (C) 1997, 1998, 1999, 2000, 2001, 2002, 2003, 2005 // Free Software Foundation, Inc.

Copyright (C) 1997, 1998, 1999, 2000, 2001, 2002, 2003, 2008 ## Free Software Foundation, Inc.

Copyright (C) 1997, 1998, 1999, 2000, 2001, 2002, 2004 // Free Software Foundation

Copyright (C) 1997, 1998, 1999, 2000, 2001, 2002, 2004, 2005 // Free Software Foundation, Inc.

Copyright (C) 1997, 1998, 1999, 2000, 2001, 2002, 2004, 2005, // 2006, 2007 // Free Software Foundation, Inc.

Copyright (C) 1997, 1998, 1999, 2000, 2001, 2002, 2004, 2005, 2006 // Free Software Foundation, Inc.

Copyright (C) 1997, 1998, 1999, 2000, 2001, 2002, 2004, 2005, 2006, // 2007 // Free Software Foundation, Inc.

Copyright (C) 1997, 1998, 1999, 2000, 2001, 2002, 2004, 2006 // Free Software Foundation, Inc.

Copyright (C) 1997, 1998, 1999, 2000, 2001, 2002, 2005 // Free Software Foundation, Inc.

Copyright (C) 1997, 1998, 1999, 2000, 2001, 2002, 2005, 2006 // Free Software Foundation, Inc.

Copyright (C) 1997, 1998, 1999, 2000, 2001, 2004 Free Software Foundation

Copyright (C) 1997, 1998, 1999, 2000, 2001, 2004, 2005 // Free Software Foundation, Inc.

Copyright (C) 1997, 1998, 1999, 2000, 2001, 2004, 2005, 2006 // Free Software Foundation, Inc.

Copyright (C) 1997, 1998, 1999, 2000, 2002, 2003, 2004 // Free Software Foundation, Inc.

Copyright (C) 1997, 1998, 1999, 2000, 2002, 2003, 2004, 2006 // Free Software Foundation, Inc.

Copyright (C) 1997, 1998, 1999, 2000, 2002, 2007 // Free Software Foundation, Inc.

Copyright (C) 1997, 1998, 1999, 2000, 2003 Free Software Foundation, Inc.

Copyright (C) 1997, 1998, 1999, 2000, 2004 Free Software Foundation

Copyright (C) 1997, 1998, 1999, 2000, 2004, 2007 Free Software Foundation

Copyright (C) 1997, 1998, 1999, 2001, 2002 // Free Software Foundation, Inc.

Copyright (C) 1997, 1998, 1999, 2001, 2002 Free Software Foundation, Inc.

Copyright (C) 1997, 1998, 1999, 2001, 2002, 2005 // Free Software Foundation, Inc.

Copyright (C) 1997, 1998, 1999, 2002 Free Software Foundation, Inc.

Copyright (C) 1997, 1998, 1999, 2002, 2004 // Free Software Foundation, Inc.

Copyright (C) 1997, 1998, 1999, 2003 Free Software Foundation, Inc.

Copyright (C) 1997, 1998, 1999, 2003, 2005 Free Software Foundation, Inc.

Copyright (C) 1997, 1998, 1999, 2007 Free Software Foundation, Inc.

Copyright (C) 1997, 1999, 2000, 2001, 2003, 2005 # Free Software Foundation, Inc.

Copyright (C) 1997, 1999, 2000, 2001, 2004 Free Software Foundation, Inc.

Copyright (C) 1997, 1999, 2001, 2002, 2005 Free Software Foundation, Inc.

Copyright (C) 1997, 2000, 2001, 2003, 2004, 2005 # Free Software Foundation, Inc.

Copyright (C) 1997-1999 Free Software Foundation, Inc.

Copyright (C) 1997-1999, 2000, 2001 Free Software Foundation, Inc.

Copyright (C) 1997-1999, 2000, 2002 Free Software Foundation, Inc.

Copyright (C) 1997-1999, 2001 Free Software Foundation, Inc.

Copyright (C) 1998, 1999 Greg Colvin and Beman Dawes.

Copyright (C) 1998, 1999, 2000, 2001, 2002, 2003, 2004, 2005, // 2006, 2007 // Free Software Foundation, Inc.

Copyright (C) 1998, 1999, 2003 Free Software Foundation, Inc.

Copyright (C) 1998, 1999, 2003, 2004 Free Software Foundation, Inc.

Copyright (C) 1999 Free Software Foundation, Inc.

Copyright (C) 1999, 2000 Free Software Foundation, Inc.

Copyright (C) 1999, 2000, 2001, 2002, 2003 Free Software Foundation

Copyright (C) 1999, 2000, 2001, 2002, 2003 Free Software Foundation, Inc.

Copyright (C) 1999, 2000, 2001, 2002, 2003, 2004 // Free Software Foundation, Inc.

Copyright (C) 1999, 2000, 2001, 2002, 2003, 2004 Free Software Foundation

Copyright (C) 1999, 2000, 2001, 2002, 2003, 2004, 2005 // Free Software Foundation, Inc.

Copyright (C) 1999, 2000, 2001, 2002, 2003, 2004, 2005, 2006 // Free Software Foundation

Copyright (C) 1999, 2000, 2001, 2002, 2003, 2004, 2005, 2006 // Free Software Foundation, Inc.

Copyright (C) 1999, 2000, 2001, 2002, 2003, 2004, 2005, 2006, 2007 // Free Software Foundation, Inc.

Copyright (C) 1999, 2000, 2001, 2002, 2003, 2004, 2005, 2006, 2007, 2008 // Free Software Foundation, Inc.

Copyright (C) 1999, 2000, 2001, 2002, 2003, 2005 // Free Software Foundation, Inc.

Copyright (C) 1999, 2000, 2001, 2002, 2003, 2005 Free Software Foundation

Copyright (C) 1999, 2000, 2001, 2002, 2003, 2006 // Free Software Foundation, Inc.

Copyright (C) 1999, 2000, 2001, 2002, 2004, 2005 // Free Software Foundation, Inc.

Copyright (C) 1999, 2000, 2001, 2003 Free Software Foundation

Copyright (C) 1999, 2000, 2001, 2003, 2004, 2005 // Free Software Foundation, Inc.

Copyright (C) 1999, 2000, 2001, 2004, 2005 Free Software Foundation, Inc.

Copyright (C) 1999, 2000, 2002, 2003 Free Software Foundation

Copyright (C) 1999, 2000, 2002, 2003 Free Software Foundation, Inc.

Copyright (C) 1999, 2000, 2002, 2003, 2004, 2005 // Free Software Foundation, Inc.

Copyright (C) 1999, 2000, 2002, 2003, 2005 Free Software Foundation

Copyright (C) 1999, 2000, 2003 Free Software Foundation

Copyright (C) 1999, 2000, 2003 Free Software Foundation, Inc.

Copyright (C) 1999, 2001, 2002, 2003, 2004 Free Software Foundation

Copyright (C) 1999, 2001, 2002, 2003, 2004, 2005 // Free Software Foundation, Inc.

Copyright (C) 1999, 2001, 2002, 2003, 2004, 2005 Free Software Foundation

Copyright (C) 1999, 2001, 2002, 2003, 2004, 2005, 2006 // Free Software Foundation, Inc.

Copyright (C) 1999, 2001, 2002, 2005, 2006 Free Software Foundation, Inc.

Copyright (C) 1999, 2001, 2003 Free Software Foundation

Copyright (C) 1999, 2001, 2003 Free Software Foundation, Inc.

Copyright (C) 1999, 2001, 2003, 2004 Free Software Foundation

Copyright (C) 1999, 2001, 2003, 2007 Free Software Foundation, Inc.

Copyright (C) 1999, 2001, 2004, 2005 Free Software Foundation, Inc.

Copyright (C) 1999, 2002 Free Software Foundation, Inc.

Copyright (C) 1999, 2002, 2003 Free Software Foundation, Inc.

Copyright (C) 1999, 2002, 2003, 2004 Free Software Foundation, Inc.

Copyright (C) 1999, 2002, 2003, 2004, 2005 // Free Software Foundation, Inc.

Copyright (C) 1999, 2002, 2003, 2004, 2005 Free Software Foundation, Inc.

Copyright (C) 1999, 2002, 2003, 2005 Free Software Foundation, Inc.

Copyright (C) 1999, 2002, 2004, 2005 Free Software Foundation, Inc.

Copyright (C) 1999, 2003 Free Software Foundation

Copyright (C) 1999, 2003 Free Software Foundation, Inc.

Copyright (C) 1999, 2003, 2004, 2005 Free Software Foundation, Inc.

Copyright (C) 1999, 2003, 2005 Free Software Foundation

Copyright (C) 1999, 2003, 2005 Free Software Foundation, Inc.

Copyright (C) 1999, 2004, 2005 Free Software Foundation, Inc.

Copyright (C) 1999, 2007 Free Software Foundation, Inc.

Copyright (C) 1999-2001, 2002, 2003 Free Software Foundation, Inc.

Copyright (C) 1999-2001, 2002, 2003, 2004, 2005 // Free Software Foundation, Inc.

Copyright (C) 2000 Free Software Foundation, Inc.

Copyright (C) 2000, 1999 Free Software Foundation, Inc.

Copyright (C) 2000, 2001 Free Software Foundation

Copyright (C) 2000, 2001, 2002 Free Software Foundation,

Copyright (C) 2000, 2001, 2002 Free Software Foundation, <abbrev>Inc.</abbrev> 51 Franklin <abbrev>St</abbrev>, Fifth Floor, Boston, <abbrev>MA</abbrev> 02110-1301

Copyright (C) 2000, 2001, 2002 Free Software Foundation, Inc.

Copyright (C) 2000, 2001, 2002, 2003 Free Software Foundation

Copyright (C) 2000, 2001, 2002, 2003 Free Software Foundation, Inc.

Copyright (C) 2000, 2001, 2002, 2003, 2004 Free Software Foundation

Copyright (C) 2000, 2001, 2002, 2003, 2004, 2005 // Free Software Foundation, Inc.

Copyright (C) 2000, 2001, 2002, 2003, 2004, 2005, 2006 // Free Software Foundation

Copyright (C) 2000, 2001, 2002, 2003, 2004, 2005, 2006 // Free Software Foundation, Inc.

Copyright (C) 2000, 2001, 2002, 2003, 2004, 2005, 2006, 2007 // Free Software Foundation, Inc.

Copyright (C) 2000, 2001, 2002, 2003, 2004, 2005, 2006, 2007 // Free Software Foundation

Copyright (C) 2000, 2001, 2002, 2003, 2004, 2005, 2006, 2007 // Free Software Foundation, Inc.

Copyright (C) 2000, 2001, 2002, 2003, 2004, 2005, 2006, 2007, 2008 // Free

Software Foundation, Inc.

Copyright (C) 2000, 2001, 2002, 2003, 2004, 2005, 2007 ## Free Software Foundation, Inc.

Copyright (C) 2000, 2001, 2002, 2003, 2004, 2006, 2007 // Free Software Foundation, Inc.

Copyright (C) 2000, 2001, 2002, 2003, 2005 Free Software Foundation

Copyright (C) 2000, 2001, 2002, 2003, 2005 Free Software Foundation, Inc.

Copyright (C) 2000, 2001, 2002, 2003, 2006 Free Software Foundation, Inc.

Copyright (C) 2000, 2001, 2002, 2003, 2007 Free Software Foundation

Copyright (C) 2000, 2001, 2003 Free Software Foundation, Inc.

Copyright (C) 2000, 2001, 2003, 2004 Free Software Foundation, Inc.

Copyright (C) 2000, 2001, 2003, 2004, 2005 Free Software Foundation, Inc.

Copyright (C) 2000, 2001, 2003, 2004, 2005, 2006 // Free Software Foundation, Inc.

Copyright (C) 2000, 2001, 2003, 2005 Free Software Foundation, Inc.

Copyright (C) 2000, 2001, 2004, 2005 Free Software Foundation, Inc.

Copyright (C) 2000, 2001, 2005, 2006 Free Software Foundation, Inc.

Copyright (C) 2000, 2002 Free Software Foundation, Inc.

Copyright (C) 2000, 2002, 2003 Free Software Foundation

Copyright (C) 2000, 2002, 2003 Free Software Foundation, Inc.

Copyright (C) 2000, 2002, 2003, 2004 Free Software Foundation

Copyright (C) 2000, 2002, 2003, 2004, 2006, 2007 Free Software Foundation, Inc.

Copyright (C) 2000, 2002, 2003, 2005 Free Software Foundation

Copyright (C) 2000, 2002, 2004, 2005 Free Software Foundation, Inc.

Copyright (C) 2000, 2002, 2005 Free Software Foundation, Inc.

Copyright (C) 2000, 2002, 2005, 2008 Free Software Foundation, Inc.

Copyright (C) 2000, 2002, 2006 Free Software Foundation, Inc.

Copyright (C) 2000, 2003 Free Software Foundation

Copyright (C) 2000, 2003 Free Software Foundation, Inc.

Copyright (C) 2000, 2003, 2004 Free Software Foundation

Copyright (C) 2000, 2003, 2004 Free Software Foundation, Inc.

Copyright (C) 2000, 2003, 2004, 2005 Free Software Foundation, Inc.

Copyright (C) 2000, 2005 Free Software Foundation, Inc.

Copyright (C) 2001 Free Software Foundation

Copyright (C) 2001 Free Software Foundation, Inc.

Copyright (C) 2001 Free Software Foundation, Inc. # Benjamin Kosnik <bkoz@redhat.com>, 2001.

Copyright (C) 2001, 2002 Free Software Foundation, Inc.

Copyright (C) 2001, 2002, 2003 Free Software Foundation

Copyright (C) 2001, 2002, 2003 Free Software Foundation, Inc.

Copyright (C) 2001, 2002, 2003 Peter Dimov

Copyright (C) 2001, 2002, 2003, 2004 Free Software Foundation

Copyright (C) 2001, 2002, 2003, 2004 Free Software Foundation, Inc.

Copyright (C) 2001, 2002, 2003, 2004, 2005 Free Software Foundation

Copyright (C) 2001, 2002, 2003, 2004, 2005 Free Software Foundation, Inc.

Copyright (C) 2001, 2002, 2003, 2004, 2005, 2006 // Free Software Foundation, Inc.

Copyright (C) 2001, 2002, 2003, 2004, 2005, 2006 Free Software Foundation

Copyright (C) 2001, 2002, 2003, 2004, 2005, 2006, 2007 # Free Software Foundation, Inc.

Copyright (C) 2001, 2002, 2003, 2004, 2005, 2006, 2007 // Free Software Foundation

Copyright (C) 2001, 2002, 2003, 2004, 2005, 2006, 2007 // Free Software Foundation, Inc.

Copyright (C) 2001, 2002, 2003, 2004, 2005, 2006, 2007 // Free Software Foundation

Copyright (C) 2001, 2002, 2003, 2004, 2005, 2006, 2007 // Free Software Foundation, Inc.

Copyright (C) 2001, 2002, 2003, 2004, 2005, 2006, 2007, 2008 ## Free Software Foundation, Inc.

Copyright (C) 2001, 2002, 2003, 2004, 2005, 2006, 2007, 2008 // Free Software Foundation

Copyright (C) 2001, 2002, 2003, 2004, 2005, 2006, 2007, 2008 // Free Software Foundation, Inc.

Copyright (C) 2001, 2002, 2003, 2004, 2008 Free Software Foundation, Inc.

Copyright (C) 2001, 2002, 2003, 2005 Free Software Foundation, Inc.

Copyright (C) 2001, 2002, 2003, 2005 Free Software Foundation

Copyright (C) 2001, 2002, 2003, 2005 Free Software Foundation, Inc.

Copyright (C) 2001, 2002, 2003, 2005, 2006 Free Software Foundation

Copyright (C) 2001, 2002, 2003, 2005, 2007 Free Software Foundation, Inc.

Copyright (C) 2001, 2002, 2003, 2006 Free Software Foundation, Inc.

Copyright (C) 2001, 2002, 2003, 2006, 2008 Free Software Foundation, Inc.

Copyright (C) 2001, 2002, 2004 Free Software Foundation, Inc.

Copyright (C) 2001, 2002, 2004, 2005 Free Software Foundation

Copyright (C) 2001, 2002, 2004, 2005 Free Software Foundation, Inc.

Copyright (C) 2001, 2002, 2004, 2005, 2006 Free Software Foundation, Inc.

Copyright (C) 2001, 2002, 2004, 2005, 2007 Free Software Foundation, Inc.

Copyright (C) 2001, 2002, 2004, 2005, 2008 Free Software Foundation, Inc.

Copyright (C) 2001, 2002, 2004, 2006 Free Software Foundation, Inc.

Copyright (C) 2001, 2002, 2005 Free Software Foundation, Inc.

Copyright (C) 2001, 2002, 2005, 2007 Free Software Foundation, Inc.

Copyright (C) 2001, 2002, 2005, 2008 Free Software Foundation, Inc. See license.html for license.

Copyright (C) 2001, 2003 Free Software Foundation

Copyright (C) 2001, 2003 Free Software Foundation

Copyright (C) 2001, 2003 Free Software Foundation, Inc.

Copyright (C) 2001, 2003, 2004 Free Software Foundation, Inc.

Copyright (C) 2001, 2003, 2004, 2005 Free Software Foundation, Inc.

Copyright (C) 2001, 2003, 2005 Free Software Foundation, Inc.

Copyright (C) 2001, 2003, 2005 Free Software Foundation

Copyright (C) 2001, 2003, 2007 Free Software Foundation, Inc.

Copyright (C) 2001, 2004 Free Software Foundation, Inc.

Copyright (C) 2001, 2004, 2005 Free Software Foundation, Inc.

Copyright (C) 2001, 2005 Free Software Foundation, Inc.

Copyright (C) 2001, 2007 Free Software Foundation, Inc.

Copyright (C) 2002 // Free Software Foundation, Inc.

Copyright (C) 2002 Free Software Foundation

Copyright (C) 2002 Free Software Foundation, Inc.

Copyright (C) 2002 Peter Dimov

Copyright (C) 2002, 2003 Free Software Foundation

Copyright (C) 2002, 2003 Free Software Foundation, Inc.

Copyright (C) 2002, 2003, 2004, 2005 Free Software Foundation

Copyright (C) 2002, 2003, 2004, 2005 Free Software Foundation, Inc.

Copyright (C) 2002, 2003, 2004, 2005, 2006, 2007 // Free Software Foundation, Inc.

Copyright (C) 2002, 2003, 2004, 2005, 2006, 2007, 2008 ## Free Software Foundation, Inc.

Copyright (C) 2002, 2003, 2004, 2005, 2006, 2007, 2008 Free // Software Foundation

Copyright (C) 2002, 2003, 2004, 2005, 2007 Free Software Foundation, Inc.

Copyright (C) 2002, 2003, 2004, 2007 Free Software Foundation, Inc.

Copyright (C) 2002, 2003, 2005 Free Software Foundation, Inc.

Copyright (C) 2002, 2003, 2005 Free Software Foundation, Inc.

Copyright (C) 2002, 2003, 2007 Free Software Foundation, Inc.

Copyright (C) 2002, 2004 Free Software Foundation

Copyright (C) 2002, 2004 Free Software Foundation, Inc.

Copyright (C) 2002, 2004, 2005 Free Software Foundation, Inc.

Copyright (C) 2002, 2004, 2005, 2007 Free Software Foundation, Inc.

Copyright (C) 2002, 2004, 2006 Free Software Foundation, Inc.

Copyright (C) 2002, 2005, 2007 Free Software Foundation, Inc.

Copyright (C) 2002, 2007 Free Software Foundation, Inc.

Copyright (C) 2003 // Free Software Foundation, Inc.

Copyright (C) 2003 Free Software Foundation

Copyright (C) 2003 Free Software Foundation, Inc.

Copyright (C) 2003, 2004 // Free Software Foundation, Inc.

Copyright (C) 2003, 2004 Free Software Foundation

Copyright (C) 2003, 2004 Free Software Foundation, Inc.

Copyright (C) 2003, 2004, 2005 // Free Software Foundation, Inc.

Copyright (C) 2003, 2004, 2005 Free Software Foundation, Inc.

Copyright (C) 2003, 2004, 2005 Free Software Foundation

Copyright (C) 2003, 2004, 2005 Free Software Foundation, Inc.

Copyright (C) 2003, 2004, 2005, 2006 // Free Software Foundation, Inc.

Copyright (C) 2003, 2004, 2005, 2006 Free Software Foundation

Copyright (C) 2003, 2004, 2005, 2006 Free Software Foundation, Inc.

Copyright (C) 2003, 2004, 2005, 2006, 2007 // Free Software Foundation, Inc.

Copyright (C) 2003, 2004, 2005, 2006, 2007 Free Software Foundation

Copyright (C) 2003, 2004, 2005, 2006, 2007 Free Software Foundation, Inc.

Copyright (C) 2003, 2004, 2005, 2006, 2007, 2008 // Free Software Foundation, Inc.

Copyright (C) 2003, 2004, 2005, 2006, 2007, 2008 Free Software // Foundation, Inc.

Copyright (C) 2003, 2004, 2005, 2007 Free Software Foundation

Copyright (C) 2003, 2004, 2005, 2007 Free Software Foundation, Inc.

Copyright (C) 2003, 2004, 2006 Free Software Foundation, Inc.

Copyright (C) 2003, 2005 Free Software Foundation

Copyright (C) 2003, 2005 Free Software Foundation, Inc.

Copyright (C) 2003, 2005, 2006 // Free Software Foundation, Inc.

Copyright (C) 2003, 2005, 2006 Free Software Foundation, Inc.

Copyright (C) 2003, 2006 // Free Software Foundation, Inc.

Copyright (C) 2003, 2007 Free Software Foundation, Inc.

Copyright (C) 2004 Ami Tavory and Vladimir Dreizin, IBM-HRL.

Copyright (C) 2004 Free Software Foundation

Copyright (C) 2004 Free Software Foundation, Inc.

Copyright (C) 2004, 2005 Free Software Foundation, Inc.

Copyright (C) 2004, 2005 Free Software Foundation

Copyright (C) 2004, 2005 Free Software Foundation, Inc.

Copyright (C) 2004, 2005, 2006 Free Software Foundation

Copyright (C) 2004, 2005, 2006 Free Software Foundation, Inc.

Copyright (C) 2004, 2005, 2006, 2007 Free Software Foundation

Copyright (C) 2004, 2005, 2006, 2007 Free Software Foundation, Inc.

Copyright (C) 2004, 2005, 2006, 2007, 2008 // Free Software Foundation, Inc.

Copyright (C) 2004, 2005, 2006, 2007, 2008 Free Software Foundation, Inc.

Copyright (C) 2004, 2005, 2007 Free Software Foundation

Copyright (C) 2004, 2005, 2007 Free Software Foundation, Inc.

Copyright (C) 2004, 2006 Free Software Foundation, Inc.

Copyright (C) 2004, 2006, 2008 Free Software Foundation, Inc.

Copyright (C) 2004, 2007 Free Software Foundation, Inc.

Copyright (C) 2005 Free Software Foundation, Inc.

Copyright (C) 2005 Free Software Foundation

Copyright (C) 2005 Free Software Foundation, Inc.

Copyright (C) 2005, 2006 // Free Software Foundation, Inc.

Copyright (C) 2005, 2006 Free Software Foundation, Inc.

Copyright (C) 2005, 2006, 2007 Free Software Foundation

Copyright (C) 2005, 2006, 2007 Free Software Foundation, Inc.

Copyright (C) 2005, 2006, 2007, 2008 Free Software Foundation, Inc.

Copyright (C) 2005, 2006, 2008 Free Software Foundation, Inc.

Copyright (C) 2005, 2007 Free Software Foundation, Inc.

Copyright (C) 2006 // Free Software Foundation, Inc.

Copyright (C) 2006 Free Software Foundation

Copyright (C) 2006 Free Software Foundation

Copyright (C) 2006 Free Software Foundation, Inc.

Copyright (C) 2006, 2006 Free Software Foundation

Copyright (C) 2006, 2007 Free Software Foundation

Copyright (C) 2006, 2007 Free Software Foundation, Inc.

Copyright (C) 2006, 2007, 2008 // Free Software Foundation, Inc.

Copyright (C) 2006, 2007, 2008 Free Software Foundation

Copyright (C) 2006, 2007, 2008 Free Software Foundation, Inc.

Copyright (C) 2006, 2008 // Free Software Foundation, Inc.

Copyright (C) 2006-2007 Free Software Foundation, Inc.

Copyright (C) 2007 // Free Software Foundation, Inc.

Copyright (C) 2007 Free Software Foundation

Copyright (C) 2007 Free Software Foundation, Inc.

Copyright (C) 2007, 2008 Free Software Foundation

Copyright (C) 2007, 2008 Free Software Foundation, Inc.

Copyright (C) 2007,2008 Free Software Foundation, Inc.

Copyright (C) 2008 Free Software Foundation

Copyright (C) 2008 Free Software Foundation, Inc.

Copyright (c) 1994 * Hewlett-Packard Company

Copyright (c) 1996 * Silicon Graphics Computer Systems, Inc.

Copyright (c) 1996,1997 * Silicon Graphics

Copyright (c) 1996,1997 * Silicon Graphics Computer Systems, Inc.

Copyright (c) 1996-1997 * Silicon Graphics Computer Systems, Inc.

Copyright (c) 1996-1998 * Silicon Graphics Computer Systems, Inc.

Copyright (c) 1996-1999 * Silicon Graphics Computer Systems, Inc.

Copyright (c) 1997 * Silicon Graphics Computer Systems, Inc.

Copyright (c) 1997-1999 * Silicon Graphics Computer Systems, Inc.

Copyright (c) 1998 * Silicon Graphics Computer Systems, Inc.

Copyright (c) 2001, 2002, 2003 Peter Dimov and Multi Media Ltd.

Copyright 2008 FSF

Copyright Ami Tavory and Vladimir Dreizin, IBM-HRL, 2004, and Benjamin Kosnik, Red Hat, 2004.

Copyright Â© 1989, 1991 Free Software Foundation, Inc.

Copyright Â© 1998 ISO.

Copyright Â© 1999 The Open Group/The Institute of Electrical and Electronics Engineers, Inc..

Copyright Â© 1999 ISO.

Copyright Â© 2000 Addison Wesley Longman, Inc..

Copyright Â© 2000 Addison Wesley, Inc..

Copyright Â© 2000, 2001, 2002, 2003, 2004, 2005, 2006, 2007, 2008

Copyright Â© 2002 OOPSLA.

Copyright Â© 2004, 2005, 2006, 2007 Free Software Foundation, Inc., 51 Franklin Street, Fifth Floor, Boston, MA 02110-1301, USA

Copyright Â© 2004, 2005, 2006, 2007 Free Software Foundation, Inc., 51 Franklin Street, Fifth Floor, Boston, MA 02110-1301, USA</para>

Copyright Â© 2007 FSF.

Copyrighted by the Free Software Foundation

Copyrighted by the Free Software Foundation