SIEMENS

Data sheet US2:CLM1D03277

Mechanically held lighting contactor, Contactor amp rating 60Amp 0NC _ 3NO poles, 277VAC 60HZ coil, Non-combination type, Enclosure NEMA type 1, Indoor general purpose use

General technical data	
Weight [lb]	8 lb
Height x Width x Depth [in]	11 × 7 × 5 in
Protection against electrical shock	NA for enclosed products
Installation altitude [ft] at height above sea level maximum	6560 ft
Country of origin	USA

Contactor	
Number of NO contacts for main contacts	3
Number of NC contacts for main contacts	0
Operating voltage for main current circuit at AC at 60 Hz maximum	600 V
Mechanical service life (switching cycles) of the main contacts typical	10000000
Contact rating of the main contacts of lighting contactor	
• at tungsten (1 pole per 1 phase) rated value	60A @277V 1p 1ph
• at tungsten (2 poles per 1 phase) rated value	60A @480V 2p 1ph
• at tungsten (3 poles per 3 phases) rated value	60A @480V 3p 3ph
• at ballast (1 pole per 1 phase) rated value	60A @347V 1p 1ph
• at ballast (2 poles per 1 phase) rated value	60A @600V 2p 1ph
• at ballast (3 poles per 3 phases) rated value	60A @600V 3p 3ph
• at resistive load (1 pole per 1 phase) rated value	60A @347V 1p 1ph
• at resistive load (2 poles per 1 phase) rated value	60A @600V 2p 1ph
• at resistive load (3 poles per 3 phases) rated value	60A @600V 3p 3ph

Auxiliary contact	
Number of NC contacts for auxiliary contacts	0
Number of NO contacts for auxiliary contacts	0
Number of total auxiliary contacts maximum	4
Contact rating of auxiliary contacts of contactor according to UL	NA

Coil

Subject to change without notice
© Copyright Siemens

Type of voltage of the control supply voltage	AC
Control supply voltage	
• at DC rated value	0 ... 0 V
• at AC at 60 Hz rated value	277 ... 277 V
• at AC at 50 Hz rated value	0 ... 0 V
Apparent pick-up power of magnet coil at AC	410 V·A
Apparent holding power of magnet coil at AC	40 V·A
Operating range factor control supply voltage rated value of magnet coil	0.85 ... 1.1

Enclosure

Degree of protection NEMA rating of the enclosure	NEMA 1 enclosure
Design of the housing	Indoor general purpose use

Mounting/wiring

Mounting position	Vertical
Mounting type	Surface mounting and installation
Type of electrical connection for supply voltage line-side	Box lug
Tightening torque [lbf·in] for supply	45 ... 50 lbf·in
Type of connectable conductor cross-sections at line-side at AWG conductors single or multi-stranded	1x (14 ... 4 AWG)
Temperature of the conductor for supply maximum permissible	75 °C
Material of the conductor for supply	AL or CU
Type of electrical connection for load-side outgoing feeder	Box lug
Tightening torque [lbf·in] for load-side outgoing feeder	45 ... 50 lbf·in
Type of connectable conductor cross-sections at AWG conductors for load-side outgoing feeder single or multi-stranded	1x (14 ... 4 AWG)
Temperature of the conductor for load-side outgoing feeder maximum permissible	75 °C
Material of the conductor for load-side outgoing feeder	AL or CU
Type of electrical connection of magnet coil	Screw-type terminals
Tightening torque [lbf·in] at magnet coil	8 ... 12 lbf·in
Type of connectable conductor cross-sections of magnet coil at AWG conductors single or multi-stranded	2x (16 ... 12 AWG)
Temperature of the conductor at magnet coil maximum permissible	75 °C
Material of the conductor at magnet coil	CU

Short-circuit current rating

© Copyright Siemens

Design of the fuse link for short-circuit protection of the main circuit required	none
Design of the short-circuit trip	Thermal magnetic circuit breaker
Maximum short-circuit current breaking capacity (Icu)	
• at 240 V	5 kA
• at 480 V	5 kA
• at 600 V	5 kA

Further information

Industrial Controls - Product Overview (Catalogs, Brochures,…)
www.usa.siemens.com/iccatalog

Industry Mall (Online ordering system)
https://mall.industry.siemens.com/mall/en/us/Catalog/product?mlfb=US2:CLM1D03277

Service&Support (Manuals, Certificates, Characteristics, FAQs,...)
https://support.industry.siemens.com/cs/US/en/ps/US2:CLM1D03277

Image database (product images, 2D dimension drawings, 3D models, device circuit diagrams, EPLAN macros, ...)
http://www.automation.siemens.com/bilddb/cax_de.aspx?mlfb=US2:CLM1D03277&lang=en

Subject to change without notice
© Copyright Siemens

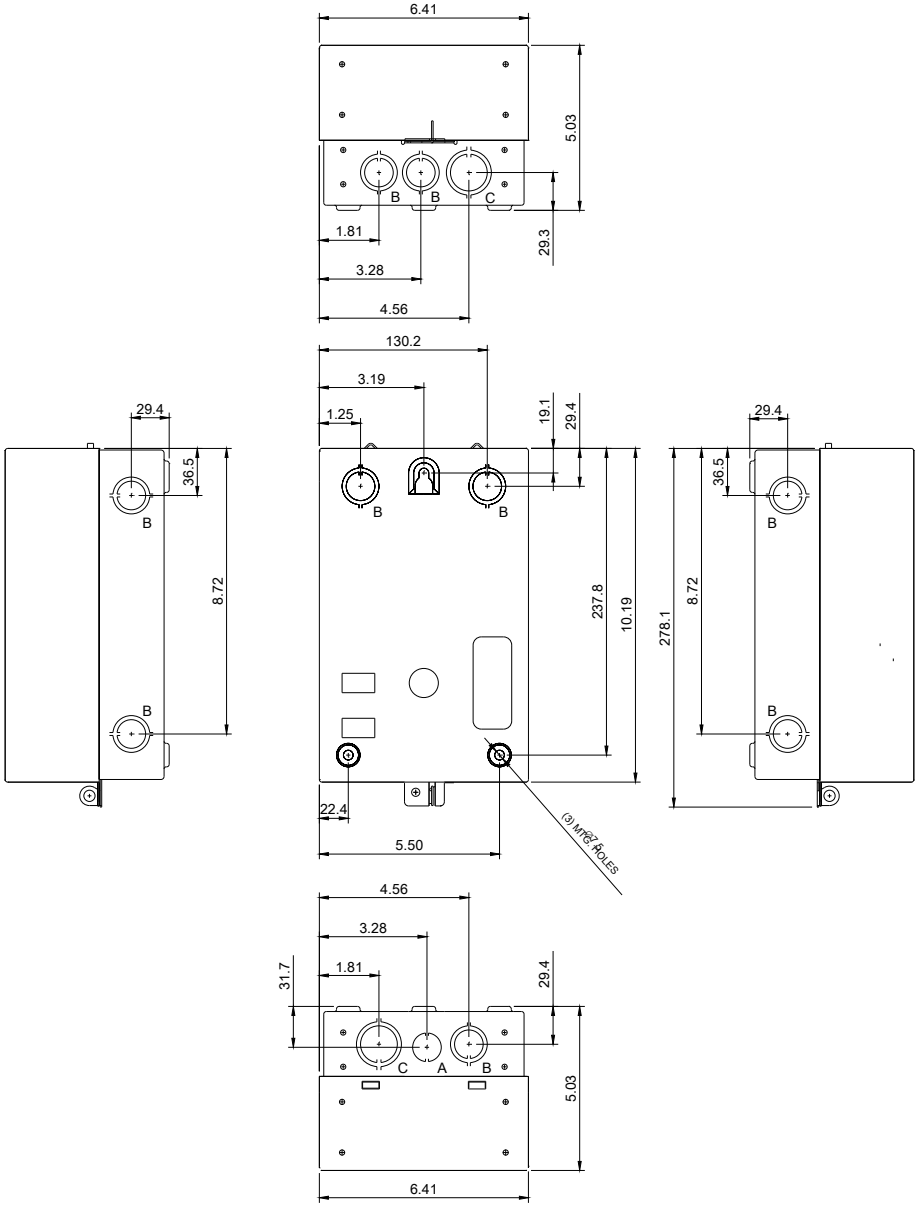

LETTER	KNOCKOUT & CONDUIT SIZE
A	%%C22.2 FOR 12.7 CONDUIT
B	%%C22.2 X %%C28.6 FOR 12.7 & 19 CONDUIT
C	%%C28.6 X %%C34.9 FOR 19 & 25.4 CONDUIT

Subject to change without notice
© Copyright Siemens

Wiring Diagram Class CLM
30-200 Amp 2. 3. 4 and 5 Pole

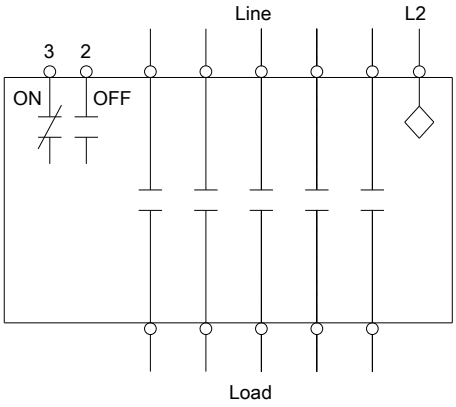

Notes:

1. Dotted lines represent additional poles.
   Contactor may have 2. 3. 4 or 5 poles.
2. Optional auxiliary contacts are not shown.

E87010-A0410-T009-A1-CLM-1

last modified: 03/29/2018

Subject to change without notice
© Copyright Siemens