SIEMENS

Data sheet 8WD4308-0CA

Bracket for wall mounting, for mounting on one side, without foot and pipe, accessory for signaling columns, with diameter 70 mm



product brand name	SIRIUS
product designation	Bracket
design of the product	for wall mounting, one side
General technical data	
reference code according to EN 61346-2	U
Enclosure	
width	70 mm
depth	98.7 mm
material	PA
color	black
fastening method	wall mounting
Ambient conditions	
ambient temperature during operation	-20 ... +60 °C
Approvals Certificates	

General Product Approval					EMV
CE EG-Konf.	UKCA	Confirmation	cULus	EAC	RCM

Marine / Shipping	other	Environment
PRS	Confirmation	Environmental Confirmations

Further information

Information on the packaging
https://support.industry.siemens.com/cs/ww/en/view/109813875
Information- and Downloadcenter (Catalogs, Brochures,…)
https://www.siemens.com/ic10
Industry Mall (Online ordering system)
https://mall.industry.siemens.com/mall/en/en/Catalog/product?mlfb=8WD4308-0CA
Cax online generator
http://support.automation.siemens.com/WW/CAXorder/default.aspx?lang=en&mlfb=8WD4308-0CA
Service&Support (Manuals, Certificates, Characteristics, FAQs,...)
https://support.industry.siemens.com/cs/ww/en/ps/8WD4308-0CA
Image database (product images, 2D dimension drawings, 3D models, device circuit diagrams, EPLAN macros, ...)
http://www.automation.siemens.com/bilddb/cax_de.aspx?mlfb=8WD4308-0CA&lang=en

Subject to change without notice
© Copyright Siemens

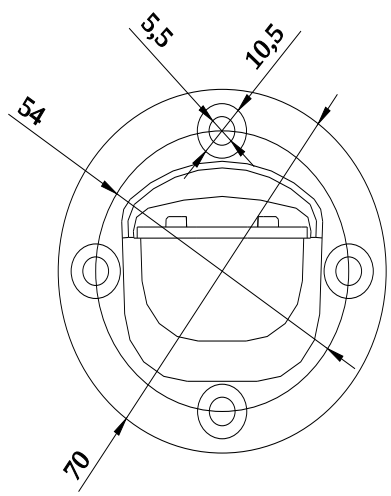

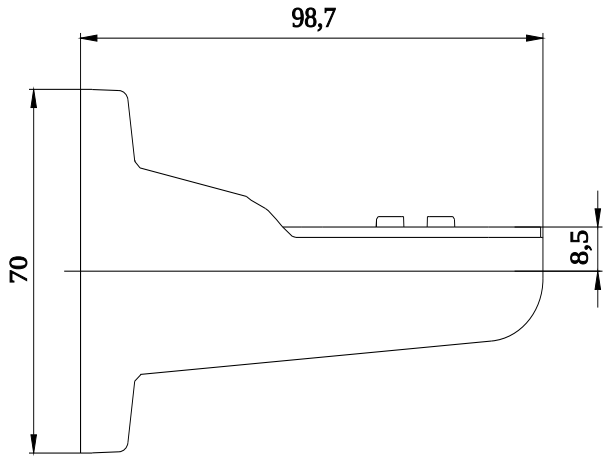

last modified: 8/2/2024

Subject to change without notice
© Copyright Siemens