

Type 1 — A general indoor, sheet-steel enclosure for use in normal atmospheres. Listed[as service entrance equipment.

Type 3R — An outdoor, sheet-steel enclosure providing protection against driving rain, sleet or snow. Listed as service entrance equipment.

Types 7, 9 — Cast aluminum enclosure classified for explosion and fire hazard. Only enclosure for use in hazardous location. Class I; Group D–Class II; Groups E, F, and G–Class III.

Types 4, 4X (not shown) — Stainless steel indoor or outdoor enclosure designed for use in areas where serious corrosion problems exist. They provide a degree of protection against windblown dust, rain, splashing water and hose-directed water. Meets NEMA Type 3, 4, 4X, 12 and 13 requirements and UL 508 Type 4 and 4X requirements.

Types 5, 12 — A special-industry, sheet-steel enclosure for use in atmospheres containing particles of lint, dust, dirt, sawdust and other foreign matter.

Type 12K — A semi-dusttight sheet-steel enclosure. Listed as service entrance equipment.

Dimensions

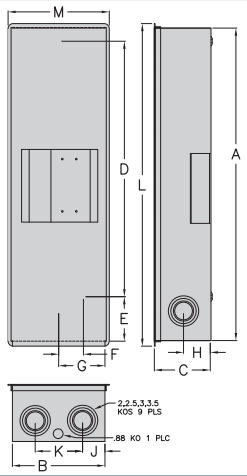

Figure 4

Figure Number	Breaker Frame	No. of Poles	Max. Current Rating	Catalog Number	Weight Lb./Ship. Package	Dimensions (inches)													
						A	B	C	D	E	F	G	H	J	K	L	M	N	P
4	QR2, QR2H, HQR2, HQR2H	2–3	250	**QR2N3R3** **QR2N1**(S)(F)	40	31.4	9.1	5.6	25.3	6.1	2.4	4.6	2.2	2.1	4.9	32.2	9.6	—	—
4	3VA51	2,3	125	**3VAE125N1(S)(F)**	40	18.5	6.9	4.5	15.5	1.5	2.3	3.4	1.8	1.9	3.0	19.6	7.3	—	—
4	3VA52, 3VA61, 3VA62	2,3	250	**3VAE250N1(S)(F)**	40	31.2	9.6	5.7	25.3	4.2	2.4	4.8	2.8	2.4	4.8	32.3	9.6	—	—
4	DG, FG	2–3	250	**FG6N1**(S)(F)③	40	31.4	9.1	5.6	25.3	6.1	2.4	4.6	2.2	2.1	4.9	32.2	9.6	—	—

Neutrals

Neutral Catalog Number	Enclosure Catalog Number	Neutral Cable Capacity and Wire Range
N250X	**QR2N1**(S)(F) **FG6N1**(S)(F) **3VAE125N1** (S)(F) **3VAE250N1** (S)(F)	6 AWG – 350 kcmil Cu/Al Grd. Lug 14 AWG –1/0 AWG Cu/Al
N125GG	**GG0121SN/FN**	(1 pc.) #14-2/0 Cu/Al, (1 pc.) #1-300 kcmil Cu/Al Grd. Lug (1 pc.) #12 - #4 Cu/Al (3 pcs.)#12 - #10 Cu/Al
W53045	**E2N1**(S)(F) **CED6N1**(S)(F)④	(1 pc.) #14–2 Cu/Al Grd. Lug (1 pc.) #14–8 Cu/Al
N250	**F6N1**(S)(F)	(1 pc.) #6–350 kcmil Cu/Al Grd. Lug (1 pc.) #14–2/0 Cu/Al
W60992	**J6N1**	(1 pc.) #1/0–750 kcmil Cu/Al or (2 pcs.) #1/0–300 kcmil Cu/Al Grd. Lug (1 pc.) #6–250 kcmil Cu/Al
W60993	**LD6N1**	(2 pcs.) #1/0–600 kcmil Grd. Lug (1 pc.) #6–250 kcmil Cu/Al
W63623	**LMD1** **MND61**	(4 pcs.) 250 kcmil–500 kcmil Cu/Al⑨ Grd. Lug (1 pc.) #6–300 kcmil Cu/Al
N2000	**PRD6N1**	(6 pcs.) #3/0–750 kcmil Cu/Al Grd. Lug (2 pcs.) #3/0–750 Cu/Al

200% Neutrals (For Type 1, 3R, 4/4X and 12 Enclosures)

Neutral Catalog Number	Enclosure Catalog Number	Neutral Cable Capacity and Wire Range
N2250	**F6N1**(S)(F)⑥	(2 pcs.) #4–350 kcmil Cu/Al Grd. Lug (1 pc.) #14–2/0 Cu/Al
N2250X	**QR2N1**(S)(F) **FG6N1**(S)(F) **3VAE125N1** (S)(F) **3VAE250N1** (S)(F)	6 AWG – 350 kcmil Cu/Al Grd. Lug 6 AWG – 2/0 AWG Cu/Al
W60993	**J6N1**⑦	(2 pcs.) #1/0–600 kcmil Grd. Lug (1 pc.) #6-250 kcmil Cu/Al
W63623	**LD6N1**⑧	(4 pcs.) 250 kcmil–500 kcmil Cu/Al Grd. Lug (1 pc.) #6–300 kcmil Cu/Al

For inches / millimeters conversion, see Application Data section.

①Surface mounted, indoor. If flush mounting is required, replace suffix "S" in catalog number with suffix "F". Also, if outdoor model required, use prefix "W" instead of "E".

②Neutral not included. Order as separate item from table on next page.

③Surface mounted, indoor. If outdoor model is required, use prefix "W" instead of "E". Not available in flush ("F") model.

④Use for 110-125 ampere ED4, ED6, or HED4 circuit breakers.

⑤Will not accept breaker with shunt trip.

⑥Also for use with Type 3R, 12, 12K & 4X enclosures (Catalog numbers **F6N3R, F6N12, F6N12K & FD6SS4**).

⑦Also for use with Type 3R, 12 & 4X enclosures (Catalog numbers **J6N3R, J6N12, & LD6SS4**).

⑧Also for use with Types 3R and 12 enclosures (Catalog numbers **LD6N3R & LD6N12**).

⑨For 600 MCM neutral cable (3) in, (3) out (#4–600 kcmil Cu/Al) use catalog number **W411239**

Dimensions

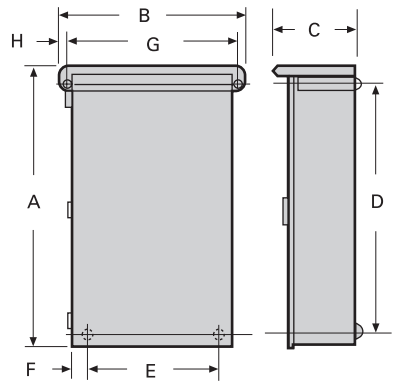

Figure 4

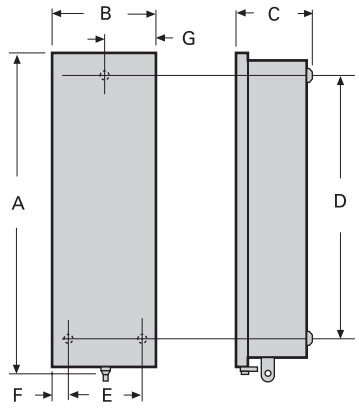

Figure 5

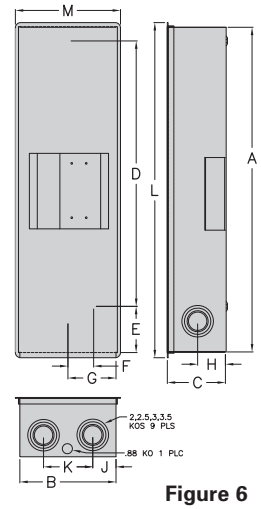

Figure 6

Figure Number	Breaker Frame	No. of Poles	Max. Current Rating	Catalog Number	Weight Lb./Ship. Package	Dimensions (inches)												KO Dim.	
						A	B	C	D	E	F	G	H	J	K	L	M	G	H
6	QR2, QR2H, HQR2, HQR2H	2-3	250	**QR2N3R3**	40	31.4	9.1	5.6	25.3	6.1	2.4	4.6	2.2	2.1	4.9	32.2	9.6	—	—
6	3VA51	2,3	125	**3VAE125N3R**	40	18.5	6.9	4.5	15.5	1.5	2.3	3.4	1.8	1.9	3.0	19.4	7.3	—	—
6	3VA52, 3VA61, 3VA62	2,3	250	**3VAE250N3R**	40	31.2	9.6	5.7	25.3	4.2	2.4	4.8	2.8	2.4	4.8	32.3	9.6	—	—
6	DG, FG	2-3	250	**FG6N3R**②	40	31.4	9.1	5.6	25.3	6.1	2.4	4.6	2.2	2.1	4.9	32.2	9.6	—	—

Neutrals④

Neutral Catalog Number	Enclosure Catalog Number	Neutral Cable Capacity and Wire Range
N125GG	**GG0123RN**	(1 PC.) #14-2/0 Cu/Al, (1 pc.) #1-300 kcmil Cu/Al Grd. Lug (1 pc.) #12 - #4 Cu/Al (3 pcs.)#12 - #10 Cu/Al
N250X	**QR2N3R3** **FG6N3R** **3VAE125N3R** **3VAE250N3R**	6 AWG – 350 kcmil Cu/Al Gnd. Lug 14 AWG –1/0 AWG Cu/Al
W53045②	**E2N3R** **CED6N3R**③	(1 pc.) #14–2 Cu/Al Grd. Lug (1 pc.) #14–8 Cu/Al
N250④	**F6N3R**	(1 pc.) #6–350 kcmil Grd. Lug (1 pc.) #14–2/0 Cu/Al
W60992④	**J6N3R**	1 pc.) #1/0–750 kcmil Cu/Al or (2 pcs.) #1/0–300 kcmil Cu/A Grd. Lug (1 pc.) #6–250 kcmil Cu/Al
W60993④	**LD6N3R**	(2 pcs.) #1/0–600 kcmil Grd. Lug (1 pc.) #6–250 kcmil Cu/Al
W63623	**LMD3R** **MND63**	(4 pcs.) 250 kcmil–500 kcmil Cu/Al⑤ Grd. Lug (1 pc.) #6–300 kcmil Cu/Al

Hubs — see page 6-14.

For inches / millimeters conversion, see Application Data section.

①Neutral not included. Order as separate item from table on next page.

②Neutral included in enclosure.

③Use CED enclosure for all ED-frame 110-125 ampere units.

④200% neutrals are also available. See listing on page 6-9.

⑤For applications requiring 600MCM neutral conductors (3) in, (3) out (#4-600 kcmil Cu/Al) use neutral catalog number **W41123**.

Dimensions

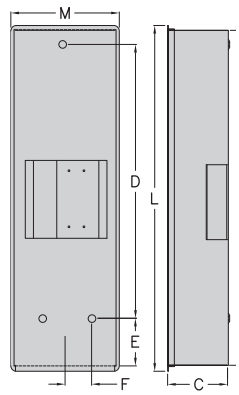

Figure 1

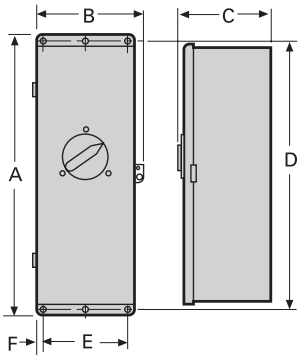

Figure 2

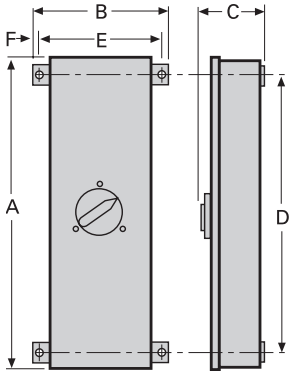

Figure 3

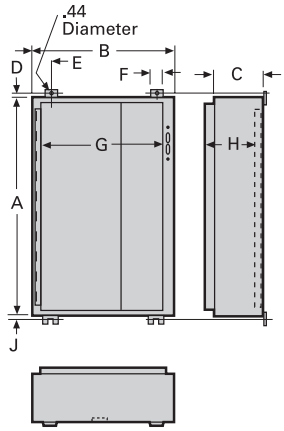

Figure 4

Types 5, 12 and 12K

Figure Number	Breaker Frame	No. of Poles	Max. Current Rating	Catalog Number②	Weight Lb./Ship. Package	Dimensions (inches)											
						A	B	C	D	E	F	G	H	J	K	L	M
1	QR2, QR2H, HQR2, HQR2H	2–3	250	**QR2N12**	40	31.4	—	5.6	25.3	6.1	2.4	—	—	—	—	32.2	9.6
1	3VA51	2–3	125	**3VAE125N12**	40	18.5	—	4.5	15.5	1.5	2.3	—	—	—	—	19.6	7.3
1	3VA52, 3VA61, 3VA62	2–3	250	**3VAE250N12**	40	31.2	—	5.7	25.3	4.2	2.4	—	—	—	—	32.3	9.6
1	DG, FG	2–3	250	**FG6N12**	40	31.4	—	5.6	25.3	6.1	2.4	—	—	—	—	32.2	9.6
2	ED2, ED4, ED6, HED4	2–3	100	**E2N12**①④	12	18.6	8.3	7.1	18	6.1	0.5						
2	CED6, ED2, ED4, ED6	2–3	125	**CED6N12**①④■	16	23.4	8.3	7.1	22¼	6.1	0.5						
2	FXD6, FD6, FXD6, FD6, HFD6, CFD6	2–3	250	**F6N12**①③	40	38.6	14.5	8.1	34.0	13.0	0.7						
3	JXD2, JD6, JXD6, HJD6, HJXD6, HHJD6, HHJXD6, SJD6, SHJD6	2–3	400	**J6N12**	104	41.5	21.6	11.9	37.2	20.4	0.6						
3	LD6, LXD6, HLD6, HLXD6, HHLD6, HHLXD6, SLD6, SHLD6, CJD6, CLD6, SCJD6, SCLD6	2–3	600	**LD6N12**■	104	46.5	21.6	11.9	42.2	20.4	0.6						
4	LMXD6, LMD6, HLMXD6, HLMD6	2–3	800	**LMD12**■	220	60.0	37.4	10.0	0.4	3.0	2.0						

Neutrals

Neutral Catalog Number	Enclosure Catalog Number②	Neutral Cable Capacity and Wire Range
W53045④	**E2N12**	(1 pc.) #14–2 Cu/Al
	CED6N12⑤	
N250X	**QR2N12** **FG6N12** **3VAE125N12** **3VAE250N12**	6 AWG – 350 kcmil CU / AL Grd. Lug 14 AWG –1/0 AWG CU / AL
N250③⑥	**F6N12**	(1 pc.) #6–350 kcmil Grd. Lug (1 pc.) #14–2/0 Cu/Al
W60992③⑥	**J6N12**	(1 pc.) #1/0–750 kcmil Cu/Al or (2 pc.) #1/0–300 kcmil Cu/Al Grd. Lug (1 pc.) #6–250 kcmil Cu/Al
W60993③⑥	**LMD612** **MND612**	(2 pcs.) #1/0–600 kcmil Grd. Lug (1 pc.) #6–250 kcmil Cu/Al
W63623③	**LD6SS4**	(4 pcs.) 250 kcmil–500 kcmil Cu/Al Grd. Lug (1 pc.) #6–300 kcmil Cu/Al

For inches/millimeters conversion, see Application Data section.
■ Built to order. Allow 2–3 weeks for delivery.
Note: All above enclosures are suitable for use as service entrance devices.

①Catalog Number is for Type 12. If Type 12K with knockouts is required, add suffix "K" to catalog number.
②Does not include circuit breaker. Order circuit breaker separately.
③Neutral not included. Order as separate item.
④Neutral included in enclosure.
⑤Use CED enclosure for all ED-frame 110–125 ampere units.
⑥200% neutrals are also available. See listing on page 6-9.
⑦For 600 MCM neutral cable (3) in, (3) out (#4-600 kcmil Cu/Al) use catalog number **W411239**
⑧Includes 100% rated breakers.