SIEMENS

SIMATIC

ET 200SP HA
Digital Input Module DI 16xNAMUR HA (6DL1131-6TH00-0PH1)

Manual

Security information 1

Product overview 2

Wiring 3

Parameters 4

Displays and interrupts 5

Technical specifications 6

Drivers, parameters, diagnostics messages and address space A

11/2017
A5E39293880-AB

Legal information

Warning notice system

This manual contains notices you have to observe in order to ensure your personal safety, as well as to prevent damage to property. The notices referring to your personal safety are highlighted in the manual by a safety alert symbol, notices referring only to property damage have no safety alert symbol. These notices shown below are graded according to the degree of danger.

⚠ DANGER

indicates that death or severe personal injury **will** result if proper precautions are not taken.

⚠ WARNING

indicates that death or severe personal injury **may** result if proper precautions are not taken.

⚠ CAUTION

indicates that minor personal injury can result if proper precautions are not taken.

NOTICE

indicates that property damage can result if proper precautions are not taken.

If more than one degree of danger is present, the warning notice representing the highest degree of danger will be used. A notice warning of injury to persons with a safety alert symbol may also include a warning relating to property damage.

Qualified Personnel

The product/system described in this documentation may be operated only by **personnel qualified** for the specific task in accordance with the relevant documentation, in particular its warning notices and safety instructions. Qualified personnel are those who, based on their training and experience, are capable of identifying risks and avoiding potential hazards when working with these products/systems.

Proper use of Siemens products

Note the following:

⚠ WARNING

Siemens products may only be used for the applications described in the catalog and in the relevant technical documentation. If products and components from other manufacturers are used, these must be recommended or approved by Siemens. Proper transport, storage, installation, assembly, commissioning, operation and maintenance are required to ensure that the products operate safely and without any problems. The permissible ambient conditions must be complied with. The information in the relevant documentation must be observed.

Trademarks

All names identified by ® are registered trademarks of Siemens AG. The remaining trademarks in this publication may be trademarks whose use by third parties for their own purposes could violate the rights of the owner.

Disclaimer of Liability

We have reviewed the contents of this publication to ensure consistency with the hardware and software described. Since variance cannot be precluded entirely, we cannot guarantee full consistency. However, the information in this publication is reviewed regularly and any necessary corrections are included in subsequent editions.

Siemens AG
Division Process Industries and Drives
Postfach 48 48
90026 NÜRNBERG
GERMANY

A5E39293880-AB
℗ 01/2018 Subject to change

Copyright © Siemens AG 2017.
All rights reserved

Table of contents

1 Security information....5

2 Product overview....7

2.1 Properties of the I/O module DI 16xNAMUR HA....7

3 Wiring....9

3.1 Pin assignment of the I/O module DI 16xNAMUR HA....9

3.2 Schematic circuit diagram....12

4 Parameters....15

4.1 Parameters the I/O module DI 16xNAMUR HA....15

4.2 Module/channel parameters....16

4.3 Explanation of the module/channel parameters....18

4.4 Flutter monitoring....22

5 Displays and interrupts....25

5.1 Status and error displays of the I/O module DI 16xNAMUR HA....25

5.2 Interrupts....28

5.3 Diagnostics for changeover contact sensor type....29

6 Technical specifications....31

A Drivers, parameters, diagnostics messages and address space....35

A.1 Concept of the driver and diagnostics blocks....35

A.2 Parameter assignment....37

A.3 Parameter assignment and structure of the module/channel parameters....39

A.4 Diagnostics messages and maintenance events....43

A.5 Hardware interrupts....46

A.6 Address space....47

Index....49

Security information

1

Siemens provides products and solutions with industrial security functions that support the secure operation of plants, systems, machines, and networks.

In order to protect plants, systems, machines and networks against cyber threats, it is necessary to implement – and continuously maintain – a holistic, state-of-the-art industrial security concept. Siemens' products and solutions constitute one element of such a concept.

Customers are responsible for preventing unauthorized access to their plants, systems, machines and networks. Such systems, machines and components should only be connected to an enterprise network or the internet if and to the extent such a connection is necessary and only when appropriate security measures (e.g. firewalls and/or network segmentation) are in place.

For additional information on industrial security measures that may be implemented, please visit:
https://www.siemens.com/industrialsecurity

Siemens' products and solutions undergo continuous development to make them more secure. Siemens strongly recommends that product updates are applied as soon as they are available and that the latest product versions are used. Use of product versions that are no longer supported, and failure to apply the latest updates may increase customer's exposure to cyber threats.

To stay informed about product updates, subscribe to the Siemens Industrial Security RSS Feed under
https://www.siemens.com/industrialsecurity.

Validity of the documentation

This device manual describes the DI 16×NAMUR HA I/O module with the article number 6DL1131-6TH00-0PH11.

It complements the system manual of the ET 200SP HA Distributed I/O System.

Functions that generally relate to the system are described in this manual.

The information in this device manual and the system/function manuals enables you to put the ET 200SP HA into operation.

Appendices

The appendices provide information that is relevant for using the ET 200SP HA outside the PCS 7 environment.

Conventions

Please also observe notes marked as follows:

Note

A note contains important information on the product described in the documentation, on the handling of the product and on the section of the documentation to which particular attention should be paid.

Product overview

2

2.1 Properties of the I/O module DI 16xNAMUR HA

View of the module

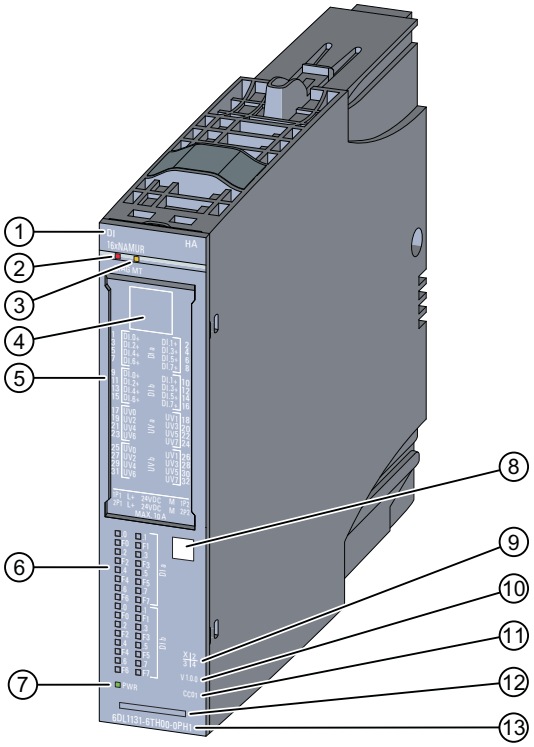

① Module type and designation
② LED for diagnostics
③ LED for maintenance
④ 2D matrix code
⑤ Wiring diagram
⑥ LEDs for channel status/channel fault
⑦ LED for supply voltage
⑧ Module type color coding
⑨ Product version
⑩ Function status and firmware version
⑪ Color code for selection of the color-coded labels
⑫ Serial number
⑬ Article number

Figure 2-1 DI 16xNAMUR HA

Properties

The I/O module is used to connect NAMUR encoders as well as to wire and unwire mechanical contacts.

The I/O module has the following technical properties:

- 16 digital inputs with the following properties that can be individually configured for each channel
  - Pulse stretching
  - Hardware interrupts for positive and negative edges
  - Flutter monitoring
- Diagnostics for change-over contact sensor type
- Channel-granular configurable diagnostics, even for change-over contact mode
- Module-specific configurable diagnostics for missing supply voltage L+

The module supports the following functions:

- Firmware update
- I&M identification data
- Parameter reassignment in RUN
- Value status QI
- IO redundancy
- Time stamping

You can configure the I/O module with HW Config and integrate it into your system

Accessories

The following accessories can be ordered separately:

- Labeling strips
- Color-coded labels
- Reference identification label
- Shield connector

Wiring

3

3.1 Pin assignment of the I/O module DI 16xNAMUR HA

Terminal blocks

You can operate the I/O module with the following terminal blocks:

- 6DL1193-6TP00-0DH1 light
- 6DL1193-6TP00-0BH1 dark
- 6DL1193-6TP00-0DM1, light, for redundant configuration
- 6DL1193-6TP00-0BM1, dark, for redundant configuration

The terminal block is not included in the scope of delivery of the I/O module and must be ordered separately.

Note

You can find additional information on the configuration in the system manual.

General pin assignment

Table 3-1 Pin assignment of the DI 16xNAMUR HA

Terminal	Assignment	Terminal	Assignment	Explanations
1	DI_0	**2**	DI_1	DI_n: Input signal, channel n
3	DI_2	**4**	DI_3	U_{Sn}: Sensor supply, channel n
5	DI_4	**6**	DI_5	1P1: Supply voltage L+ of the voltage bus 1P
7	DI_6	**8**	DI_7	2P1: Supply voltage L+ of the voltage bus 2P
9	DI_8	**10**	DI_9	1P2: Ground reference of the voltage bus 1P
11	DI_{10}	**12**	DI_{11}	2P2: Ground reference of the voltage bus 2P
13	DI_{12}	**14**	DI_{13}	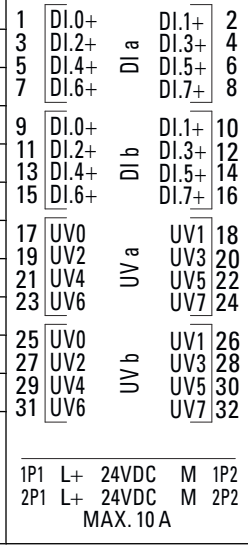
15	DI_{14}	**16**	DI_{15}	
17	U_{S0}	**18**	U_{S1}	
19	U_{S2}	**20**	U_{S3}	
21	U_{S4}	**22**	U_{S5}	
23	U_{S6}	**24**	U_{S7}	
25	U_{S8}	**26**	U_{S9}	
27	U_{S10}	**28**	U_{S11}	
29	U_{S12}	**30**	U_{S13}	
31	U_{S14}	**32**	U_{S15}	
1P1	L+	**1P2**	M	
2P1[1]	L+	**2P2**	M	

[1] If the module is inserted in a TB45R-P32 terminal block suitable for IO redundancy, the voltage at this terminal is 1P3.

The figures below show the connections for input signal DI_0 for all encoder types.		
NAMUR sensors / IEC 60947-5-6 sensors 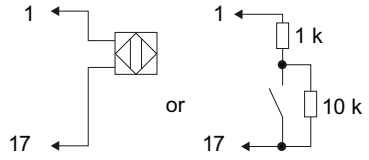	NAMUR change-over contacts / IEC 60947-5-6 change-over contacts 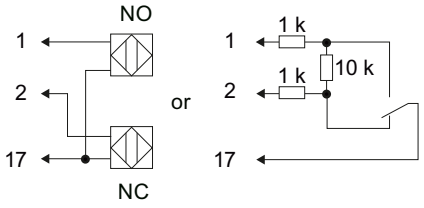	Single contact connected with 10 kΩ (mechanical normally open contact) 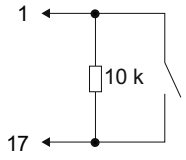
Change-over contact connected with 10 kΩ (mechanical change-over contact) 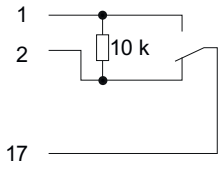	Single contact, unconnected (mechanical normally open contact with single contact) 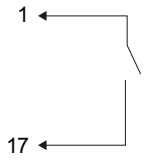	Change-over contact, unconnected (mechanical change-over contact) 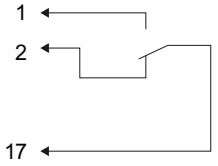

3.2 Schematic circuit diagram

The following figure shows the block diagram of the DI 16×NAMUR HA.

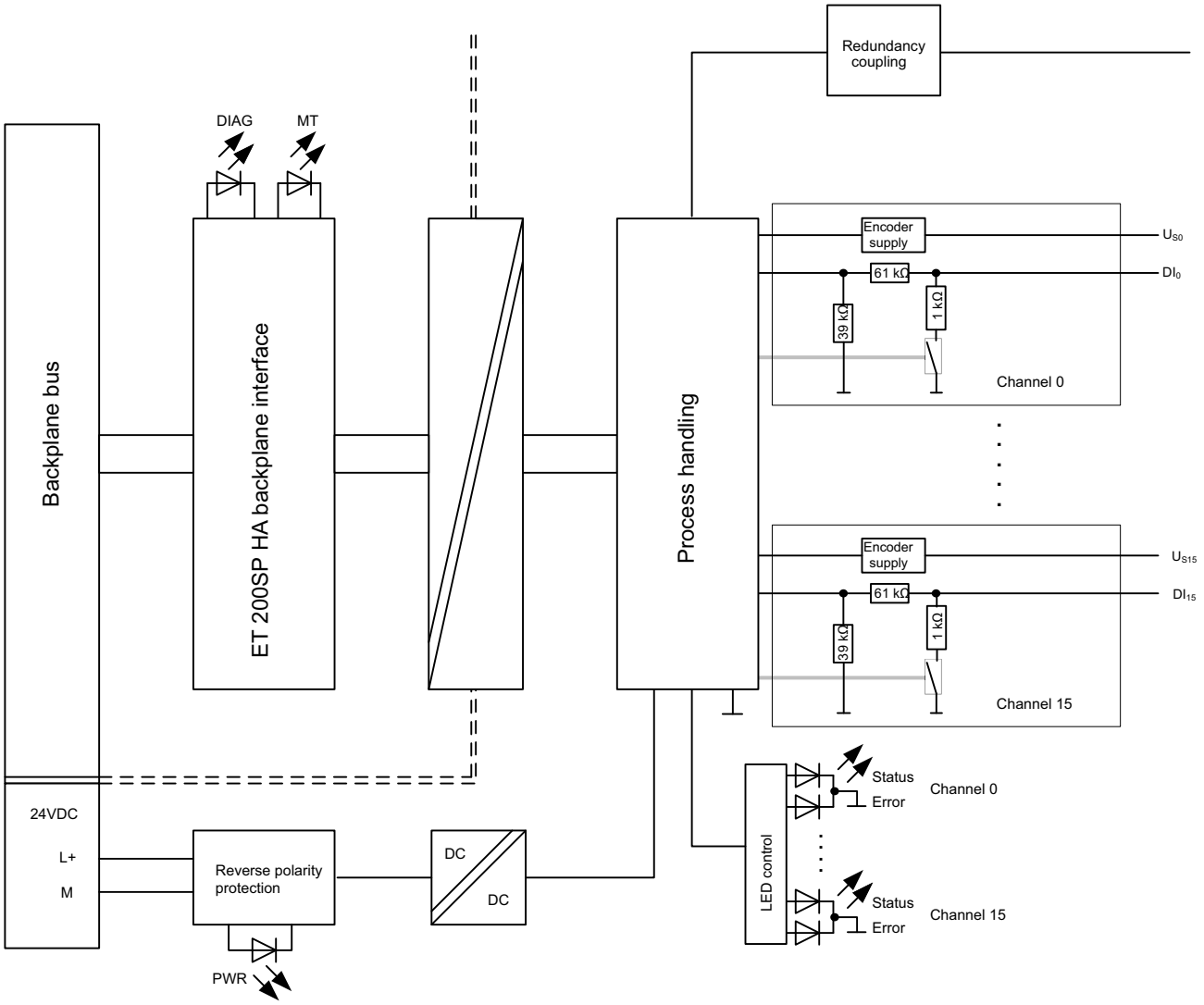

Figure 3-1 Block diagram DI 16×NAMUR HA

Supply voltage L+/M

Connect the supply voltage L+ to the 24VDC and ground connectors. The module features built-in protection against reverse polarity. The I/O module monitors the connection of the supply voltage.

Firmware update

The supply voltage L+ must be available on the I/O module at the start of firmware updates and during the update.

WARNING

Redundantly working modules with product version less than 3

A firmware update during operation is not permitted for redundantly working "DI 16×NAMUR HA" modules with product version less than 3.

Reason:
A wire break can result in incorrect process values during the update.

Parameters

4

4.1 Parameters the I/O module DI 16xNAMUR HA

Configuring

You configure the I/O module with PCS 7 V9.0 or higher.

Parameters

You define the functioning of the I/O module via parameters.

The time stamp is configured in the configuration dialog of the I/O module.

The parameters are subdivided into:

- Module/channel parameters (data record 128)
- System parameters (potential group, IO redundancy)

See also

Parameter assignment (Page 37)

Address space (Page 47)

4.2 Module/channel parameters

Parameters of the DI 16xNAMUR HA

You have the following setting options:

Table 4-1 Parameters and their default settings

Parameters	Value range	Default	Changing parameter settings in RUN	Efficiency range
Diagnostics, Missing supply voltage L +	• Enabled • Disabled	Enabled	Yes	Module
IO redundancy	• None • 2 modules	None	Yes	Module
Diagnostics Short-circuit	• Enabled • Disabled	Enabled	Yes	Channel
Diagnostic Wire break	• Enabled • Disabled	Enabled	Yes	Channel
Diagnostic Change-over contact error	• Enabled • Disabled	Disabled	Yes	Channel
Diagnostic Flutter error	• Enabled • Disabled	Disabled	Yes	Channel
Flutter monitoring: Monitoring window	• 0.5 s • 1 s to 100 s (can be set in 1 s-increments)	0.5 s	Yes	Channel
Flutter monitoring: Number of signal changes	• Disabled • 2 to 32	Disabled	Yes	Channel
Hardware interrupts	• Disabled • Rising edge • Falling edge • Falling and rising edge	Disabled	Yes	Channel
Encoder type	• Channel disabled • NAMUR sensor • Single contact, unconnected • Single contact, connected with 10 kΩ • NAMUR change-over contact • Change-over contact, unconnected • Change-over contact, connected with 10 kΩ	NAMUR sensor	Yes	Channel

Parameters	Value range	Default	Changing parameter settings in RUN	Efficiency range
Pulse stretching	• None • 0.5 s • 1 s • 2 s	None	Yes	Channel
Inversion	• Enabled • Disabled	Disabled	Yes	Channel
Potential group	• Use potential group of the left module • Allow new potential group	Use potential group of the left module	No	Module

Parameter reassignment

Each configuration change resets the corresponding reaction. Changing the configuration of a function does not affect other functions.

Exception: Inversion and flutter monitoring because an additional edge change is generated when disabling/enabling the inversion.

4.3 Explanation of the module/channel parameters

Diagnostics, Missing supply voltage L+

Enabling of the diagnostics for missing or insufficient supply voltage L+.

IO redundancy

You can configure two identical modules redundantly. To do so, plug both modules into a redundant terminal block side by side. You can find additional information on mounting modules in an IO redundancy configuration in the ET 200SP HA System Manual, section "Installing", "Installing terminal block".

In IO redundancy mode, the left module is the master and the right module the slave.

The two redundant modules measure the process simultaneously and independently. The two redundant modules form diagnostics, interrupts and process values.

Diagnostic short circuit

Enabling diagnostics message when a short circuit occurs between the leads of the encoder.

Short circuit diagnostics can be used in the following settings of the encoder:

- NAMUR sensor
- NAMUR change-over contact

Diagnostics, Wire break

Enable of the diagnostics for when the module has no power or insufficient power at the corresponding configured input.

You can use the wire break diagnostics with the following setting of the encoder:

- NAMUR sensor
- Single contact with 10 kΩ
- NAMUR change-over contact
- Change-over contact with 10 kΩ

Diagnostic change-over contact error

The diagnostics alarm is enabled when a change-over error occurs.

The diagnostics change-over contact error you can use with the following adjustment of the encoder:

- NAMUR change-over contact
- Change-over contact, unconnected
- Change-over contact with 10 kΩ

Change-over contact errors can be detected only with errors detected input signals.

Diagnostic flutter error

The diagnostics alarm is enabled when a flutter error occurs.

Flutter monitoring: Monitoring window

Flutter monitoring: Setting of the monitoring window

Each input channel has a configurable monitoring window.

Flutter monitoring: Number of signal changes

Flutter monitoring: Setting of the signal change

Settings for the tolerated number of signal changes during flutter monitoring within the monitoring window.

Number of signal changes = 0 deactivates the flutter monitoring function.

Hardware interrupts

Specifies whether a hardware interrupt is disabled and wherein edge at digital input a hardware interrupt is generated.

Encoder type

Specifies which sensor type is connected (see Table 3-1 Pin assignment of the DI 16xNAMUR HA (Page 10)).

Change-over contacts (NAMUR change-over contact, unconnected change-over contact, change-over contact-over contact with 10 Kilohms) can only be configured for channels that have an even channel number (NO channel: 0, 2, 4, etc.). Each following channel (NC channel: 1, 3, 5, ...) is shown as disabled.

Pulse stretching

Pulse stretching is a function for changing a digital input signal. A pulse at a digital input is extended to at least the configured length. If the input pulse is already longer than the configured length, then the pulse will not be changed.

If hardware interrupts are supported, the pulse-stretched signal is the signal that triggers a hardware interrupt.

Principle of pulse stretching

The figure below uses examples to show whether and how input pulses are changed.

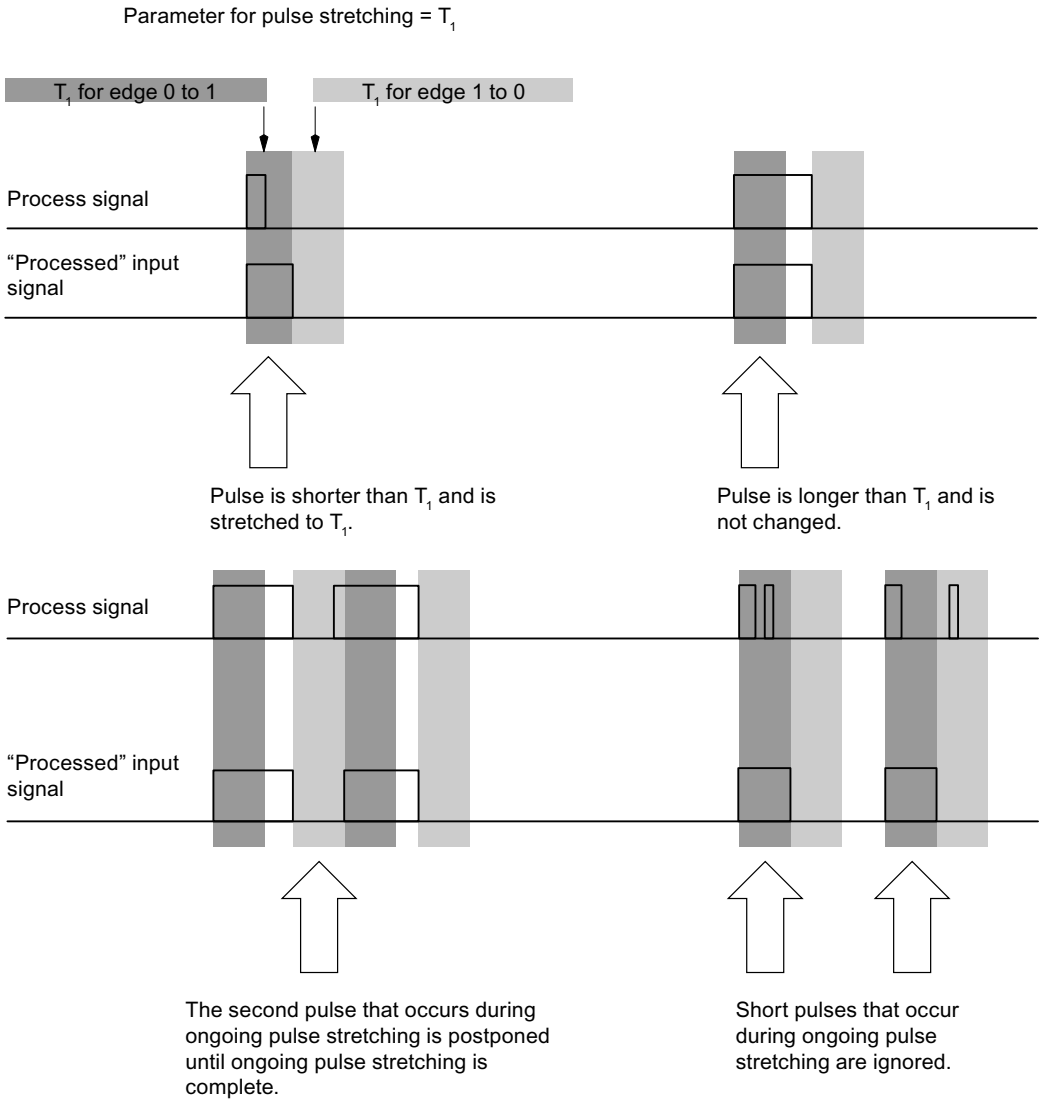

Figure 4-1 Principle of pulse stretching

Note

If you configure pulse stretching for an input channel, it also affects flutter monitoring enabled for this channel. The "pulse-stretched" signal is the input signal for flutter monitoring. You therefore need to adapt the parameter settings of pulse stretching and flutter monitoring to each other. You can adapt the functions to your process by selecting the appropriate values for the parameters.

Note

Ongoing pulse stretching is reset when an error occurs in the value status (QI = 0, for example wire break).

Inversion

Specifies whether or not the input signal is to be inverted.

Inversion can be used with the following encoder types:

- NAMUR sensor
- Single contact, unconnected
- Single contact with 10 kΩ

Potential group

A potential group consists of a group of directly adjacent I/O modules within an ET 200SP station HA, which are supplied via a common supply voltage.

A potential group begins with a light terminal block, via which the required supply voltage is fed to all I/O modules of the potential group. The light-colored terminal block interrupts the self-assembling voltage buses to the left neighbor

All other I/O modules of this potential group are plugged into dark terminal blocks. I/O modules on dark terminal block section take the potentials of self-assembling voltage rails from the left neighbor.

A potential group ends with the dark terminal block, which follows a light terminal block or a server module in the station configuration.

You can find additional information on the configuration of the potential group in the system manual *SIMATIC; Distributed I/O System; ET 200SP HA*.

See also

Pin assignment of the I/O module DI 16xNAMUR HA (Page 9)

Diagnostics for changeover contact sensor type (Page 29)

ET 200SP distributed I/O system (http://support.automation.siemens.com/WW/view/en/58649293)

4.4 Flutter monitoring

Description

Flutter monitoring is a process control function for digital input signals. It detects and reports unusual process control signal patterns, for example, an excessive number of input signal changes between 0 and 1 within a monitored period. This period is referred to as the monitoring window. If signal characteristics like these occur, it is a sign that the sensors are faulty or that there are instabilities from a process engineering viewpoint.

A monitoring window and a number of signal changes must be specified for the flutter monitoring function to define the permissible changes of the input signal within the monitoring window.

A prerequisite for the flutter monitoring function is that the input signal can be detected without error.

Activation of flutter monitoring.

Activate flutter monitoring by setting an allowable number of input signal changes between 0 and 1 within the monitoring window. The number 0 deactivates the flutter monitoring function.

A flutter error detected by the flutter monitoring has a direct effect on the value status (QI).

Detecting a flutter error

Each input channel has a monitoring window that has been assigned parameters. The monitoring window is started the first time the input signal changes. If the input signal changes within the monitoring window more often than the configured number of signal changes, this is recognized as a flutter error. If no flutter error is detected within the monitoring window, the window is restarted at the next signal change.

Reporting a flutter error

If a flutter error occurs, the current signal state is entered in the process image and the value status of the signal is set to invalid (QI = 0). When flutter error diagnostics is enabled, the flutter error diagnostics information is also entered and an incoming diagnostics interrupt is triggered.

You can evaluate and process the value status (QI) and the diagnostics information in the user program.

Resetting a flutter error

If no further flutter of the input signal is detected within three monitoring windows, an outgoing diagnostics interrupt is triggered. The value state of the current signal in the process image is set to valid.

Note

Active flutter monitoring is reset if there is an error in the input signal (value status QI = 0).

Principle

The following figure gives you another graphic illustration of the principle of flutter monitoring.

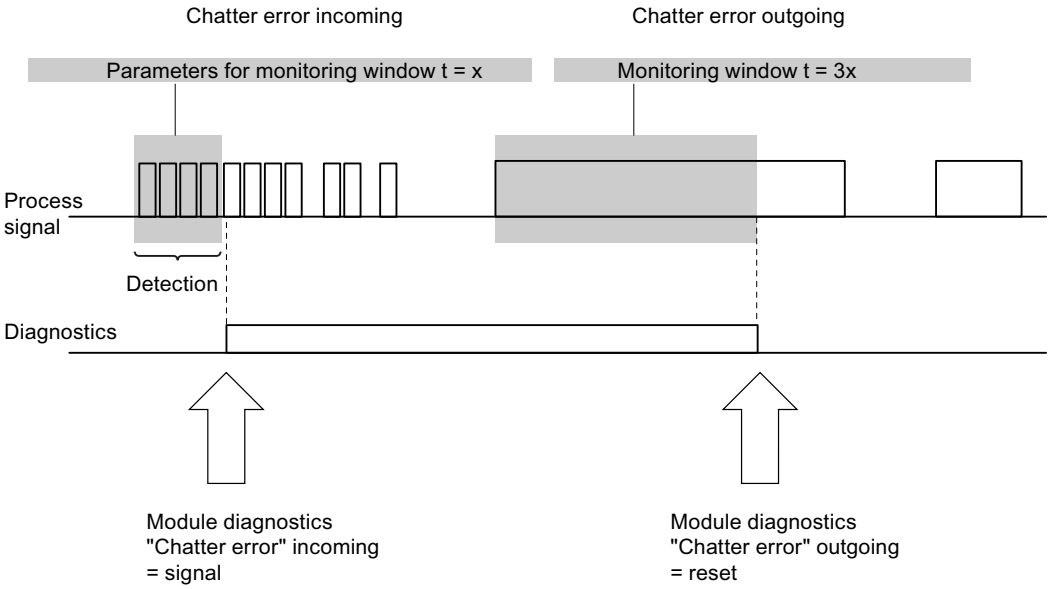

Figure 4-2 The principle of flutter monitoring

Flutter monitoring and settling time when flutter error occurs

Does the monitoring time in the event of a fault restart as three monitoring windows if the signal continues to change?

The signal changes...	Result
once more than what is set in the number of signal changes.	Monitoring time is restarted.
less often than what is set in the number of signal changes.	The monitoring time is not started again, in other words, the monitoring time runs once after a flutter error is detected. Even a change just before the time is up is tolerated.

Displays and interrupts

5

5.1 Status and error displays of the I/O module DI 16xNAMUR HA

LED displays

The following figure shows the LED displays of the I/O module.

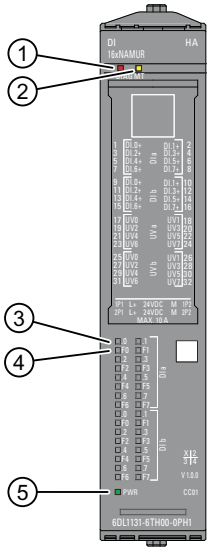

① DIAG LED (green/red)
② MT LED (yellow)
③ Channel status LED (green)
④ Channel fault LED (red)
⑤ PWR LED (green)

Figure 5-1 LED displays

Meaning of the LED displays

The tables below explain the meaning of the status and error displays. Corrective measures for diagnostics alarms can be found in chapter Diagnostics messages and maintenance events (Page 43).

DIAG LED

Table 5-1 Diagnostics display of the DIAG LED

DIAG LED	Meaning
Off	The power supply of the ET 200SP HA is disrupted or switched off
Flashing	Module is not configured.
On	Module is configured, a diagnostics message is not pending.
Flashing	Module is configured, at least one diagnostic message is pending.

MT LED

Table 5-2 Status display of the LED MT

MT LED	Meaning
Off	No maintenance required.
On	Maintenance is required, i.e. at least one maintenance event has occurred.

Channel status/channel error LED

The green channel status LED shows the signal state of the input at the enabled channel.

The red channel fault LED lights up when a channel diagnostics is active at an enabled channel.

If inversion is enabled, the channel status LED shows the inverted status of the signal applied to the terminal.

Table 5-3 Status and error display of the LEDs channel status and channel error

Channel status LED	Channel fault LED	Meaning
Off	Off	• Channel disabled or module switched off • Process signal = 0, channel enabled and no channel diagnostics pending • Module diagnostics pending
On	Off	Process signal = 1, channel enabled and no channel diagnostics / module diagnostics pending
Off	On	Process signal = 0, channel enabled and channel diagnostics pending
On	On	Process signal = 1, channel enabled and channel diagnostics pending

PWR LED

Table 5-4 Status display of the PWR LED

PWR LED	Meaning
□ Off	Supply voltage L+ missing
■ On	Supply voltage L+ present

5.2 Interrupts

The I/O module supports diagnostics interrupts and hardware interrupts. You can find additional information on hardware interrupts in the appendix Hardware interrupts (Page 46)

Diagnostics interrupts

The module generates a diagnostics interrupt at the following events:

- Channel/component temporarily unavailable
- Hardware interrupt lost
- Module is faulty
- Short-circuit
- Wire break
- Supply voltage missing
- Change-over contact error
- Flutter error
- Parameter assignment error
- Retentive memory in carrier module defective
- Retentive memory in the terminal block defective
- Redundancy partner has different hardware/firmware
- IO redundancy warning
- Redundancy parameter assignment inconsistent

Note

A pending "Module is defective" or "Over temperature" diagnostic is not deleted from the module without a restart.

5.3 Diagnostics for changeover contact sensor type

Diagnostics for change-over contact sensor type

With the change-over error diagnostics, the switchover between two input channels is checked. If there is a signal change in a change-over contact channel and there is no signal change at the other contact change-over channel after the tolerated switchover time, the diagnostics module returns a change-over error.

The tolerated switchover time between the two channels is set to the fixed value of 300 ms.

Change-over sensors are always assigned to two adjacent channels: The NO channel is set according to the encoder type on channel 0, 2, 4, 6, 8, 10, 12 or 14, the respective associated NC channel 1, 3, 5, 7, 9, 11, 13 or 15 must be deactivated.

Principle of change-over contact diagnostics

If the digital inputs of a channel group are configured as "change-over contacts", the module for this channel group carries out diagnostics for the change-over contact sensor type.

If the plausibility check is negative, the following happens:

- The module identifies the value status of the NO channel as "invalid" (QI = "0").
- The module creates a diagnostics entry for the NO channel.
- If the change-over contact error diagnostics is enabled, a diagnostics interrupt is triggered.

The digital input signal and the value status are only updated for the NO channel. The digital input signal is 0 and the value status is "invalid" (QI = "0") for the NC channel. This channel is only used for a validity check of the sensor.

Please note the following special features for change-over contact diagnostics:

- If the normally open and normally closed contact signals are not plausible after 300 ms, a change-over error is output as diagnostics information.
- If there is already a fault (QI = 0, e.g. a wire break), the module will no longer perform diagnostics for change-over errors.
- There are different diagnostics options depending on the type of change-over contact. Depending on the sensor type, a change-over error can have different causes.
  - In the case of connected change-over contacts, a change-over error may also be the result of a short-circuit (sensor is not defective; there is a short-circuit).
  - In the case of unconnected change-over contacts, a change-over error may also be the result of a wire break.
  - If a wire break or short-circuit can be detected with the particular sensor type but its diagnostics is not enabled, instead of the wire break or short-circuit diagnostics information, the change-over error diagnostics information is displayed if this is enabled.

Technical specifications

6

Technical specifications of the DI 16×NAMUR HA

Article number	6DL1131-6TH00-0PH1
General information	
Product type designation	DI 16xNAMUR HA
HW functional status	FS01
Firmware version	V1.0
• FW update possible	Yes
Usable terminal block	TB type H1 and M1
Color code for module-specific color identification plate	CC01
Product function	
• I&M data	Yes; I&M0 to I&M3
Engineering with	
• PCS 7 configurable/integrated as of version	V9.0
Operating mode	
• DI	Yes
• Counter	No
Redundancy	
• Redundancy capability	Yes; With TB type M1
Supply voltage	
Rated value (DC)	24 V
permissible range, lower limit (DC)	19.2 V
permissible range, upper limit (DC)	28.8 V
Reverse polarity protection	Yes
Input current	
Current consumption (rated value)	95 mA
Current consumption, max.	115 mA
Encoder supply	
Number of outputs	16
Output voltage encoder supply, min.	8.1 V
Short-circuit protection	Yes
Power	
Power available from the backplane bus	74 mW
Power loss	
Power loss, typ.	2.4 W
Address area	
Address space per module	
• Address space per module, max.	2 byte; + 2 bytes for QI information

Article number	6DL1131-6TH00-0PH1
Digital inputs	
Number of digital inputs	16
Digital inputs, parameterizable	Yes
Type	NAMUR
Pulse extension	Yes; 0.5 s, 1 s, 2 s
Time stamping	Yes
Time stamp (with precision of 1 ms)	No
Edge evaluation	Yes; rising edge, falling edge, edge change
Signal change flutter	Yes; 2 to 32 signal changes
Flutter observation window	Yes; 0.5 s, 1 s to 100 s in 1-s steps
Input voltage	
• Type of input voltage	DC
• Rated value (DC)	8.2 V
Input current	
for 10 k switched contact	
– for signal "0"	0.35 to 1.2 mA
– for signal "1"	2.1 ... 6.4 mA
for unswitched contact	
– for signal "0", max. (permissible quiescent current)	0.5 mA
– for signal "1"	typ. 8 mA
for NAMUR encoders	
– for signal "0"	0.35 to 1.2 mA
– for signal "1"	2.1 ... 6.4 mA
Input delay (for rated value of input voltage)	
• tolerated changeover time for changeover contacts	300 ms
for NAMUR inputs	
– at "0" to "1", max.	17 ms
– at "1" to "0", max.	25 ms
Cable length	
• shielded, max.	600 m
• unshielded, max.	200 m
Encoder	
Connectable encoders	
• NAMUR encoder/changeover contact according to EN 60947	Yes
• Single contact / changeover contact unconnected	Yes
• Single contact / changeover contact connected with 10 kΩ	Yes
• 2-wire sensor	Yes; Acc. to NAMUR

Article number	6DL1131-6TH00-0PH1
– permissible quiescent current (2-wire sensor), max.	1.2 mA
Interrupts/diagnostics/status information	
Alarms	
• Diagnostic alarm	Yes; channel by channel
• Hardware interrupt	Yes; Parameterizable, channels 0 to 15, rising/falling edge
Diagnostic messages	
• Diagnostic information readable	Yes
• Monitoring the supply voltage	Yes
– parameterizable	Yes
• Monitoring of encoder power supply	Yes
• Wire-break	Yes
• Short-circuit	Yes
• Group error	Yes
• Changeover contact error	Yes
Diagnostics indication LED	
• MAINT LED	Yes; yellow LED
• Monitoring of the supply voltage (PWR-LED)	Yes; green PWR LED
• Channel status display	Yes; Green LED
• for channel diagnostics	Yes; Red LED
• for module diagnostics	Yes; green/red DIAG LED
Potential separation	
Potential separation channels	
• between the channels	No
• between the channels and backplane bus	Yes
• Between the channels and load voltage L+	Yes
Isolation	
Isolation tested with	1 500 V DC/1 min, type test
Ambient conditions	
Ambient temperature during operation	
• horizontal installation, min.	-40 °C
• horizontal installation, max.	70 °C
• vertical installation, min.	-40 °C
• vertical installation, max.	60 °C
Dimensions	
Width	22.5 mm
Height	115 mm
Depth	138 mm
Weights	
Weight, approx.	153 g

Cycle time

The cycle time describes the period of time in which the signals from the inputs are acquired and processed. The cycle time of the I/O module is 4 ms.

Minimum pulse length

In order for a pulse or an edge transition to be reliably detected by the I/O module or the partner module (at IO redundancy failover), the signal status must be active for at least for the time period of the minimum pulse length.

Operating mode	Minimum pulse length
Stand-alone operation	Input delay + cycle time
I/O redundancy mode	40 ms + 2x input delay + 2 x cycle time

Each edge transition is detected after a delay of no more than the specified minimum pulse length. This has a corresponding effect on the time stamps for SoE (Sequence of Events),

Redundancy failover time

With an I/O redundancy failover, the update time of the process values or the detection of an edge transition is delayed once by a maximum of this time.
The redundancy failover time of the I/O module is 40 ms + input delay.

NAMUR sensors and connected contacts

Monitoring for short-circuit and wire break only for NAMUR sensors and connected contacts. The response ranges of the diagnostics correspond to IEC 60947-5-6.

Drivers, parameters, diagnostics messages and address space

A

A.1 Concept of the driver and diagnostics blocks

Use outside the PCS 7 environment

The following information of the appendix relates to the use of the ET 200SP HA outside the PCS 7 environment. If you do not plan to operate outside the PCS 7 environment, you do not need the information in the appendix.

Tasks of the driver and diagnostics blocks (driver blocks)

In process control systems, certain demands are placed on the diagnostics/signal processing. This includes the monitoring of modules, DP/PA slaves and DP master systems for malfunctions and failures.

To enable this, blocks are available in the PCS 7 library that implement the interface to the hardware including test functions.

These blocks perform two basic tasks:

- They provide signals from the process to the AS for further processing.
- They monitor modules, DP/PA slaves, and DP master systems for failure.

When the process signals are read in, these blocks access the process image input (or process image partition) (PII) and when the process signals are output, they access the process image output (or process image partition) (PIQ).

Concept

The concept of the driver and diagnostics blocks for PCS 7 can be characterized as follows:

- The separation between user data processing (CHANNEL blocks) and diagnostics data processing (MODULE blocks)
- The symbolic addressing of the I/O signals
- The automatic generation of the MODULE blocks by CFC

This block concept supports all modules from the list of approved modules.
When new Siemens or non-Siemens module types are integrated, the meta-knowledge for the driver generator can be extended by additional XML files (object and action lists).

Note

Note the following:

- The library with the driver blocks has to installed using the Setup program on the PC. This is the only method of ensuring that the meta-knowledge required for the driver generator is available. You must not copy the library from another computer.
- You can also use driver blocks from another library (for example, your own blocks from your own library). You can specify this additional library in the "Generate module drivers" dialog box. The driver generator then searches for the block to be imported in the library specified here. If the block is not found here, it is searched for in the library specified in the control file (XML file).
- If the S7 program contains a signal-processing block but not from one of the PCS 7 libraries, you have to specify the version of the driver library from which the driver blocks are to be imported in the "Generate module drivers" dialog box.

Time-optimized processing

To enable time-optimized processing during runtime, the organization blocks for error handling (for example, OB85, OB86) are automatically divided into runtime groups and the driver blocks are integrated in the corresponding runtime groups.

If an error occurs, the SUBNET block, for example, activates the relevant runtime group, the RACK block or MODULE block contained in the runtime group detects the error, evaluates it and outputs a process control message to the OS.

The diagnostics information of the module block (OMODE_xx output) is also transferred to the corresponding CHANNEL block (MODE input). If necessary, this information can be displayed by means of a PCS 7 block that can be operated and monitored on the OS or by means of a user block in a process picture (color change of the measured value or flashing display, etc.).

A.2 Parameter assignment

Parameter assignment in the user program

You can reconfigure individual channels of the module in RUN without this having an effect on the other channels.

Changing parameters in RUN

The "WRREC" instruction is used to transfer the parameters to the module using data record 128. The parameters assigned with STEP 7 are not changed permanently in the CPU, which means the parameters assigned with STEP 7 are valid again after a restart.

Output parameter STATUS

If errors occur when transferring parameters with the "WRREC" instruction, the module continues operation with the previous parameter assignment. The STATUS output parameter contains the corresponding error code.

The STATUS output parameter is 4 bytes long and is configured as followed:

- Byte1: Function_Num, general error code
- Byte2: Error_Decode, location of the error code
- Byte3: Error_Code_1, error code
- Byte4: Error_Code_2, manufacturer-specific extension of the error code

Module-specific errors are displayed via Error_Decode = 0x80 and Error_Code_1 / Error_Code_2.

Error_ Code_ 1	Error_ Code_ 2	Cause	Remedy
0xB0	0x00	Number of the data record unknown	Enter valid number for data record.
0xB1	0x01	Length of the data record is incorrect	Enter valid value for data record length.
0xB2	Varia- ble	Module cannot be reached	• Check station - is the module plugged in correctly? • Check the parameters of the WRREC instruction.
0xE0	0x01	Wrong version in the header	Correct the version number of the parameter block.
0xE0	0x02	Header error (number or length of parameter block)	Correct the length and number of the parameter blocks.

Error_ Code_ 1	Error_ Code_ 2	Cause	Remedy
0xE1	0x01	Reserved bit set	Check and correct the parameters
0xE1	0x02	Invalid diagnostics enable bit set for operating mode	
0xE1	0x05	Invalid encoding for encoder type	
0xE1	0x0B	Invalid coding for pulse stretching	
0xE1	0x0E	Invalid redundancy parameter assignment	
0xE1	0x21	Channel must be disabled due to change-over contact mode	
0xE1	0x22	No inversion is allowed for change-over contact	
0xE1	0x23	invalid coding of flutter monitoring	

Valid parameters

Only the values specified in the following are permitted. Values that are not listed are rejected by the module.

Every parameter data record is checked by the module. If an incorrect parameter is detected, the entire data record is rejected and the parameters of the module remain unchanged.

See also

Parameters the I/O module DI 16xNAMUR HA (Page 15)

A.3 Parameter assignment and structure of the module/channel parameters

Structure of data record 128

Data record 128 has a length of 108 bytes.

It contains module parameters as well as channel or technology parameters of the 16 channels; 6 bytes each.

The channel or technology parameters are divided into parameters that affect the actual signal acquisition or settings and diagnostics enables.

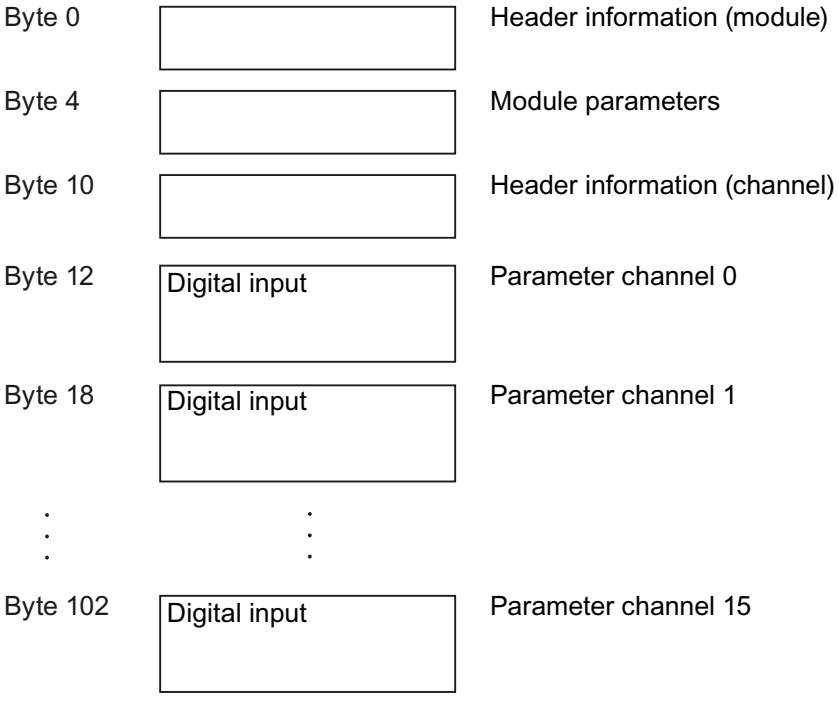

Figure A-1 Structure of data record 128

Header information and module parameters

The following figure shows the structure of the header information and module parameters.

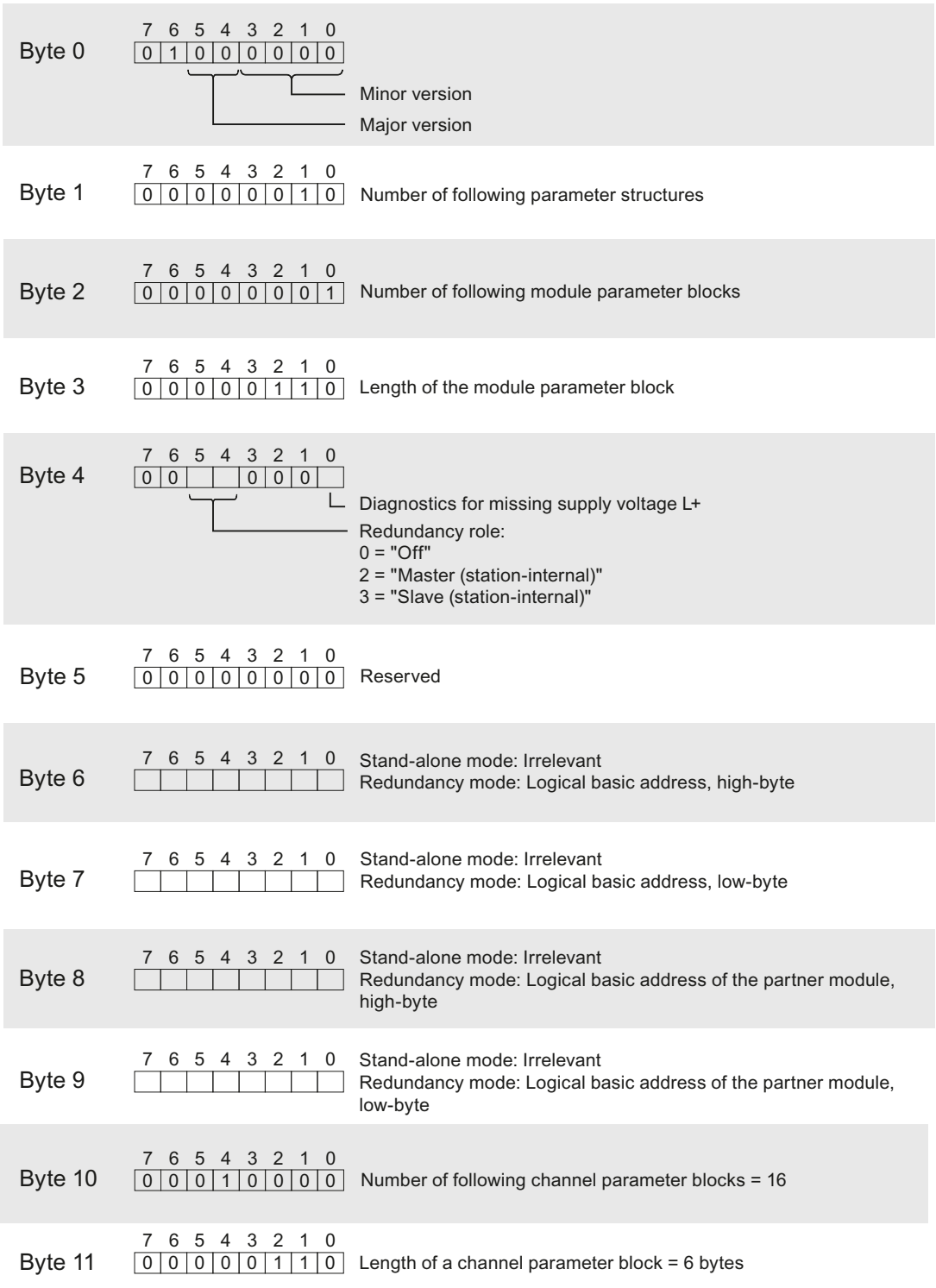

Figure A-2 Header information and module parameters of data record 128

Channel parameters

The following figure shows the configuration of the channel parameters for channels 0 to 15.

x = 12 + (channel number * 6); with channel number = 0…15

Any unused bits and bits or bytes marked with "reserved" must be set to zero.

Activate a channel parameter by setting the corresponding bit to "1" or to the appropriate value.

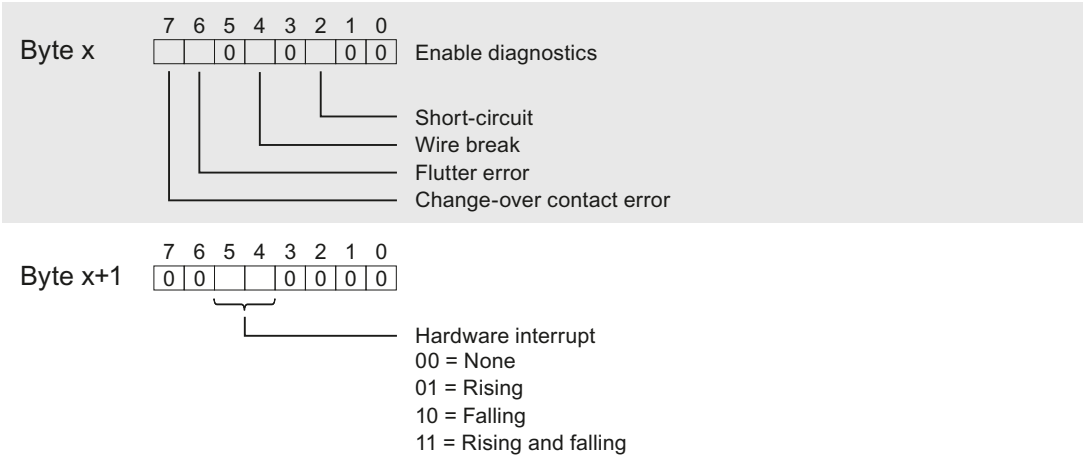

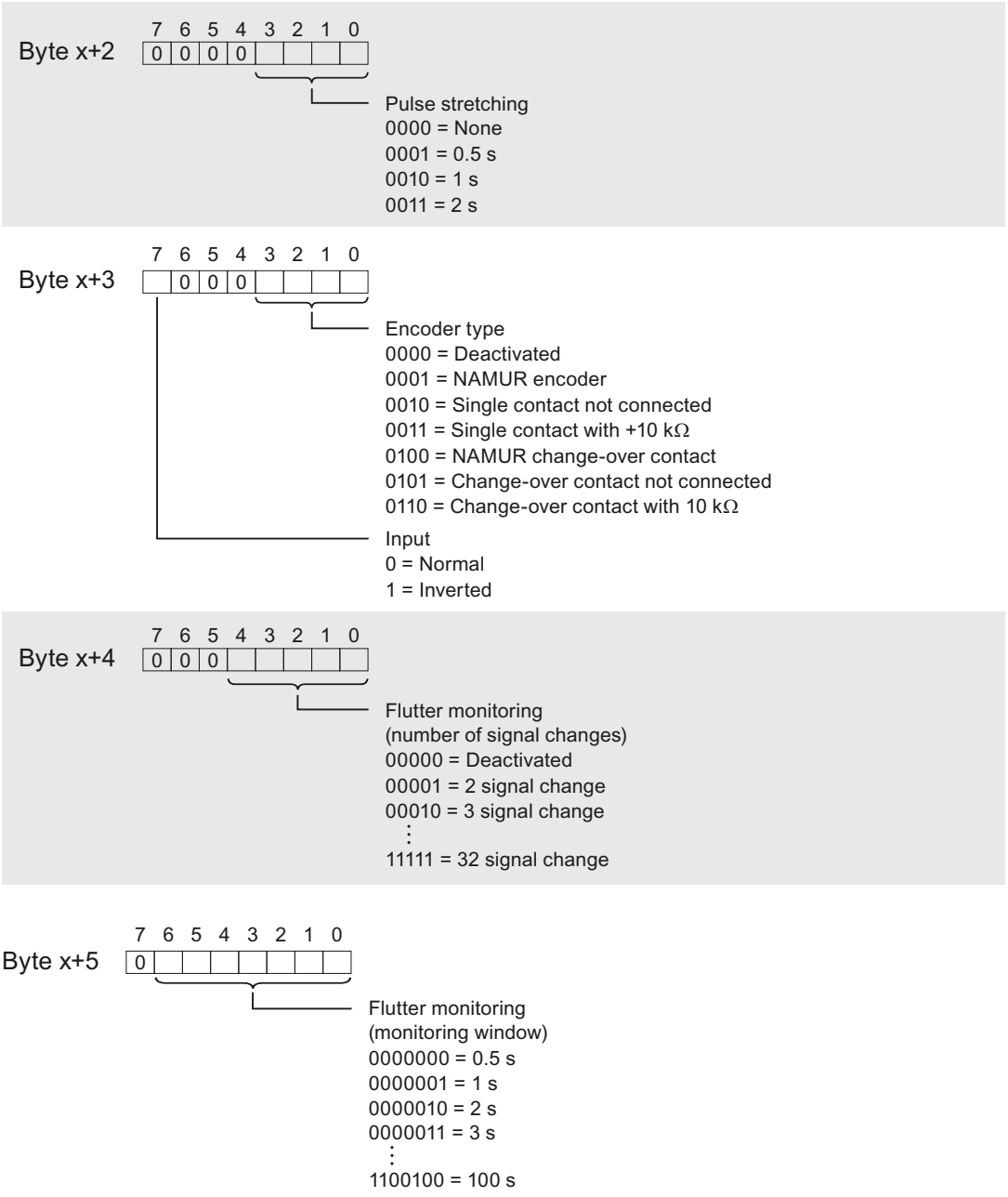

Figure A-3 Structure of byte x to x+5: for the channels 0 to 15

A.4 Diagnostics messages and maintenance events

Diagnostics messages

A diagnostics message is generated for each diagnostics event and the DIAG LED flashes on the module.

There is additionally a channel-specific display of the diagnostics through the corresponding channel fault LEDs

The diagnostics messages can be read in the diagnostics buffer of the CPU, for example.

Diagnostic messages are assigned either channel-specific to an input or assigned as module messages to all inputs. All channels are switched off for diagnostics messages that affect the entire module. Only the corresponding digital input is affected by diagnostics messages, which refer to individual channels.

Table A-1 Diagnostic messages, their meanings and remedy options

Diagnostics message	Error code	Assignment	Meaning / Cause	Remedy
Short-circuit (NAMUR change-over contact and NAMUR encoders only) Tip: Check NO and NC channel for NAMUR change-over contact.	1_H	Channel	Short-circuit on signal line to the encoder	Correction of the process wiring
			Encoder is defective	Replace the encoder
			Wrong encoder type configured	Correction of the parameter assignment
			Load impedance too low	Use an encoder with higher impedance
Channel/component temporarily unavailable	$1F_H$	Module	Firmware update is in progress or has been canceled during the update. The module stops acquiring process values during this time	• Restart firmware update • Wait for firmware update
Wire break (NAMUR change-over contact only, NAMUR encoders, encoders wired with 10 kΩ and single contacts wired with 10 kΩ) Tip: Check NO and NC channel for NAMUR change-over contact	6_H	Channel	Signal line to an encoder interrupted	Correction of the process wiring
			Encoder is defective	Replace the encoder
			Wrong encoder type configured	Correction of the parameter assignment
			Load impedance too high	Use another type of encoder or wiring, for example, use conductors with a larger cross-section
			Channel not connected (open)	Deactivate diagnostics, wire encoder contacts
Parameter assignment error	10_H	Module	• Parameter assignment does not match the terminal block used • Incorrect parameter assignment	• Correct the parameter assignment • Check terminal block[1]

Diagnostics message	Error code	Assignment	Meaning / Cause	Remedy
Supply voltage missing	11_H	Module	Missing or insufficient supply voltage L+	• Check wiring of the supply voltage L+ on the terminal block • Check the terminal block type
Hardware interrupt lost	16_H	Module	Error is reported because the events occur faster than they can be processed in the system	
Module is faulty	100_H	Module	Internal module error has occurred	Replace the module
Inconsistent parameter assignment	123_H	Module	Errors in the redundancy parameters sent to the module	• Check the parameter assignment • Check the slot and terminal block
Change-over contact error	125_H	Channel	Plausibility check between NC and NO channel negative	Check the process wiring, replace encoder
Retentive memory in carrier module defective	154_H	Module	Fault detected in the data block on the carrier module during operation	Replace carrier module
Retentive memory in the terminal block defective	155_H	Module	An error of the memory block on the terminal block was detected during operation	Replace terminal block
Encoder signal flutters	310_H	Channel	Flutter error: Signal changes too frequently within the monitoring window When the input signal stops fluttering over three cycles of the monitoring window, an outgoing diagnostics interrupt is triggered. The value state of the current signal in the process image is set to "valid".	• Check flutter monitoring parameter assignment • Check the process wiring, replace encoder if necessary

[1] Only the terminal blocks (TB 45 ...) are suitable for operating I/O modules with IO redundancy.

Maintenance events

A maintenance event is generated for each maintenance required identified. The MT LED lights up on the module.

Maintenance messages do not have a direct influence on the functions of the module or digital inputs.

Table A-2 Maintenance messages, their meaning and possible remedies

Maintenance message	Error code	Assignment	Meaning / Cause	Remedy
Redundancy partner has different hardware/firmware version	120_H	Module	The redundantly configured and interconnected I/O modules are not compatible	Check and replace modules
IO redundancy warning	121_H	Module	Unable to correctly communicate with the partner module	• Check/replace right-hand module • Check/replace left-hand module • Check/replace terminal block See also the "*ET 200SP HA Distributed I/O system* system manual, Chapter "Replacing an I/O module at IO redundancy".
Retentive memory in carrier module defective	154_H	Module	Fault detected in the data block on the carrier module during operation	Replace carrier module
Retentive memory in the terminal block defective	155_H	Module	An error of the memory block on the terminal block was detected during operation	Replace terminal block

A.5 Hardware interrupts

Hardware interrupts

The DI 16×24VDC HA generates a hardware interrupt for the following events:

- At a rising edge (signal change from 0 to 1)
- At a falling edge (signal change from 1 to 0)

Interrupt OBs are called automatically if an interrupt occurs.

The module channel that triggered the hardware interrupt is recorded in the start information of the OB40 in the OB40_POINT_ADDR tag. The figure below shows the assignment to the bits of local data double word 8.

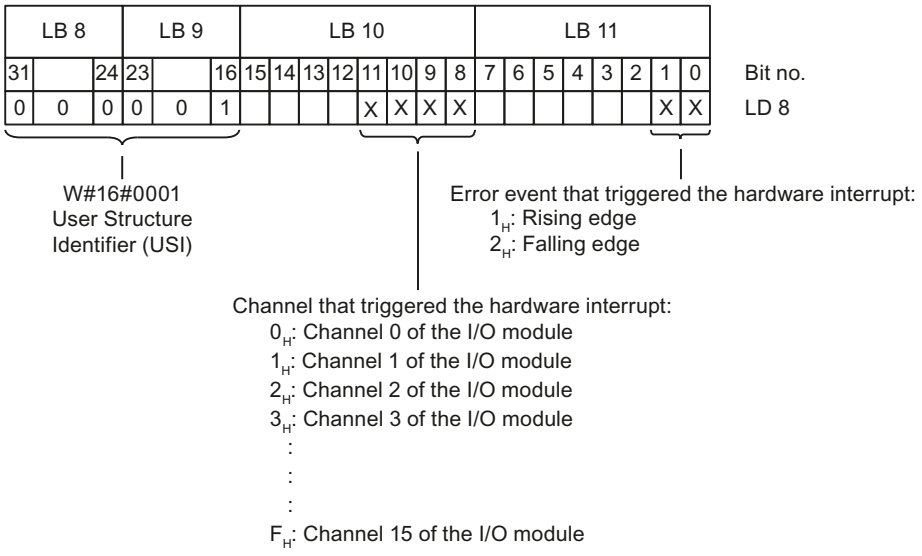

Figure A-4 Start information of the organization block

A.6 Address space

Abbreviations

- "IB" stands for input byte, that is, the module start address in the input area
- "DI" stands for digital input
- "QDIn" stands for the value status (QI) of digital input n

Address space

The following figure shows the mapping of the address space of the DI 16×NAMUR HA.

Table A-3 Address space of the I/O module DI 16xNAMUR

IB x +	7	6	5	4	3	2	1	0
0	DI7	DI6	DI5	DI4	DI3	DI2	DI1	DI0
1	DI15	DI14	DI13	DI12	DI11	DI10	DI9	DI8
2	QDI7	QDI6	QDI5	QDI4	QDI3	QDI2	QDI1	QDI0
3	QDI15	QDI14	QDI13	QDI12	QDI11	QDI10	QDI9	QDI8

Evaluating value status

There is a bit value status (QI) for each digital input in the input address space.

Irrespective of the diagnostics enables, each value status (each QI bit) provides information on the validity of the corresponding process value.

- Value status = 1: Process value okay, "good"
- Value status = 0: Process value not okay, "bad"

Basically, the value status is set to "good" if the digital value can be detected without error. The value status is set to "bad" in the following cases:

- The digital value cannot be detected due to an error.
- The digital input is disabled.
- The digital channel is configured as a NC channel
  The validity of the signal must be checked on the NO channel.

See also

GDL (http://support.automation.siemens.com/WW/view/en/57138621)

Index

C

Channel fault LED, 25
Channel parameters, 16, 39
Channel status LED, 25
Conventions, 6

D

Data record 128, 39
  Header information, 40
DI 16xNAMUR HA
  Accessories, 8
  Channel parameters, 16
  Functions, 8
  Module parameters, 16
  Parameter, 15
  Parameters, 16
  Pin assignment, 10
  Properties, 7
  Schematic circuit diagram, 12
  Technical specifications, 31
DIAG LED, 26
Diagnostics interrupt, 28
Documentation
  Range of validity, 5

L

LED displays, 25

M

Module parameters, 16
MT LED, 26

P

Parameters, 15, 16
Pin assignment, 10
PWR LED, 27

R

Reverse polarity, 12

S

Schematic circuit diagram, 12
Supply voltage, 12

T

Technology parameters, 39
Terminal block, 9

V

Value status
  Evaluating, 47