© Siemens AG 2026

Overview



The SITRANS TH100, which represents an economical alternative by dispensing with galvanic isolation and universal sensor connection, is ideally suited for Pt100 measurements.

For the parameterization, the SIPROM T software is used in combination with the modem for SITRANS TH100/TH200.

Its compact design makes the SITRANS TH100 suitable for retrofitting measuring points or replacing analog transmitters.

The transmitter is available in a non-Ex version and in a version suitable for use in hazardous areas.

Benefits

- Transmitter with 2-wire system
- Mounting in connection head, type B or larger or on DIN rail
- Programmable; as a result, the sensor connection, measuring range and much more are programmable
- Intrinsically safe version for use in hazardous areas

Application

The SITRANS TH100 transmitter can be used for temperature measurement with Pt100 resistance thermometers in all industries. Its compact size means that it can be installed in connection heads of type B or larger.

The output signal is a load-independent direct current of 4 to 20 mA which is proportional to the temperature.

Parameterization is implemented over the PC using the parameterization software SIPROM T and the modem for SITRANS TH100/TH200. If you already have a "Modem for SITRANS TK" (article number 7NG3190-6KB), you can continue to use this for parameterization of the SITRANS TH100.

Transmitters of the "intrinsically safe" type of protection can be installed within potentially explosive atmospheres. The devices meet the directive 2014/34/EU (ATEX) as well as the FM and CSA requirements.

Function

Mode of operation

The measured signal supplied by a Pt100 resistance thermometer (2, 3 or 4-wire connection) is amplified in the input stage. The voltage, which is proportional to the input variable, is then converted into digital signals by a multiplexer in an analog-to-digital converter. They are converted in the microcontroller in accordance with the sensor characteristic and further parameters (measuring range, damping, ambient temperature, etc.).

The signal prepared in this way is converted in an analog-to-digital converter into a load-independent direct current of 4 to 20 mA.

An EMC filter protects the input and output circuits against electromagnetic interferences.

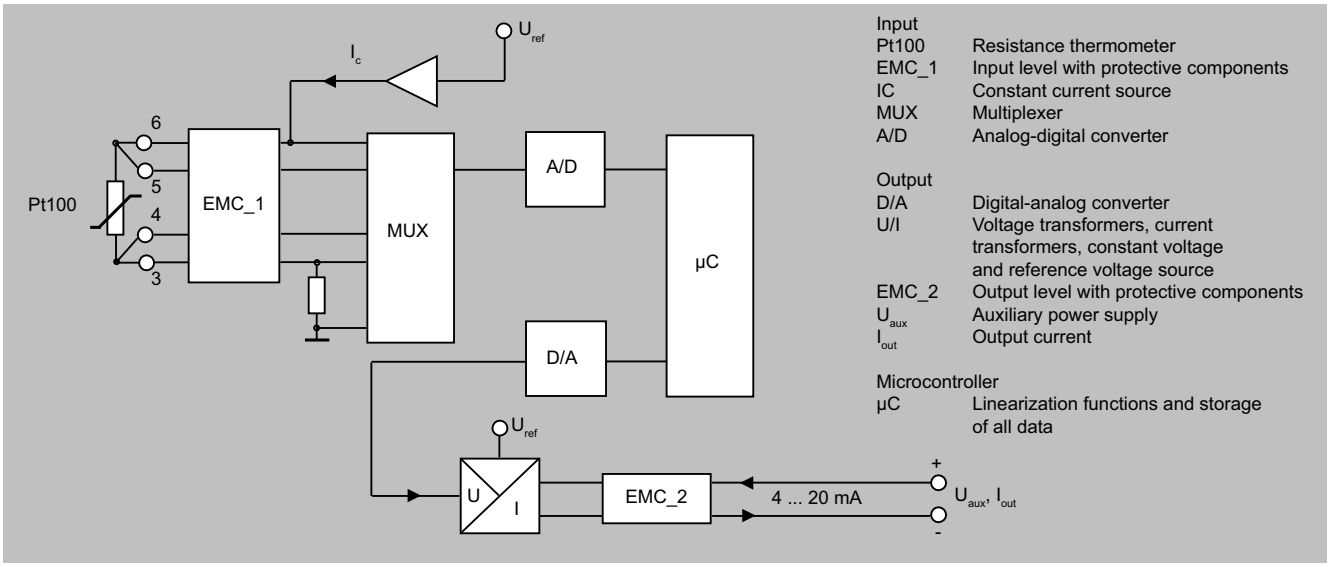

SITRANS TH100, function block diagram

© Siemens AG 2026

Selection and ordering data

	Article No.
SITRANS TH100 head transmitter for Pt100 For installation in connection head type B, 2-wire system 4 ... 20 mA, programmable, without galvanic isolation	
Without explosion protection	**7NG3211-0NN00**
With explosion protection "Intrinsic safety" type of protection and for zone 2	
• According to ATEX	**7NG3211-0AN00**
• According to FM ($_{c}FM_{US}$)	**7NG3211-0BN00**

Options **Add "-Z" to article number, specify order code and, if applicable, plain text**	**Order code**
Test report (5 measuring points)	**C11**
Customer-specific programming	
Specify measuring range to be set in plain text (max. 5 digits): Y01: ... to ... °C, °F	**Y01**[1]
Measuring point number (TAG) max. 8 characters	**Y17**[2]
Measuring point description, max. 16 characters	**Y23**[2]
Pt100 (IEC) 2-wire, R_L = 0 Ω	**U02**[3]
Pt100 (IEC) 3-wire	**U03**[3]
Pt100 (IEC) 4-wire	**U04**[3]
Enter special deviating customer-specific setting in plain text	**Y09**[4]
Fault current 3.6 mA (instead of 22.8 mA)	**U36**[2]

1) For customer-specific programming for RTD and TC, the start value and the end value of the required measuring span must be specified here.
2) For this selection, Y01 or Y09 must also be selected.
3) For this selection, Y01 must also be selected.
4) For customer-specific programming for mV and ohm, the start value and the end value of the required measuring span and the unit must be entered here.

Accessories

	Article No.
Other accessories for assembly, connection and transmitter configuration, see page 2/198.	
Modem	
Modem with USB interface and SIPROM T software	**7NG3092-8KN**
Mounting rail adapter for head transmitter (Quantity delivered: 5 units)	**7NG3092-8KA**
Connecting cable 4-wire, 200 mm (7.87 inches), for sensor connections when using head transmitters in the high spring flap (set with 5 units)	**7NG3092-8KC**

For supply units, see Catalog FI01 section "Supplementary components"

Ordering example:

7NG3211-0NN00-Z Y01+Y23+U03

Y01: -10 ... +100 °C

Y23: TICA1234HEAT

Factory setting:

Selection and ordering data (continued)

- Pt100 (IEC 751) in the 3-wire connection
- Measuring range: 0 ... 100 °C (32 ... 212 °C)
- Fault current in the event of sensor breakage: 22.8 mA
- Sensor offset: 0 °C (0 °F)
- Damping 0.0 s

Technical specifications

SITRANS TH100 (4 ... 20 mA, Pt100)	
Input	
Resistance thermometer	
Measured variable	Temperature
Input type	Pt100 according to IEC 60751
Characteristic curve	Temperature-linear
Connection type	2, 3, 4-wire connection
Resolution	14 bit
Measuring accuracy	
• Measuring span <250 °C (450 °F)	< 0.25 °C (0.45 °F)
• Measuring span >250 °C (450 °F)	< 0.1% of measuring span
Repeatability	< 0.1 °C (0.18 °F)
Measuring current	Approx. 0.4 mA
Measuring cycle	< 0.7 s
Measuring range	-200 ... +850 °C (-328 ... +1562 °F)
Measuring span	25 ... 1050 °C (77 ... 1922 °F)
Unit	°C or °F
Offset	Programmable: -100 ... +100 °C (-180 ... +180 °F)
Wire resistance	Max. 20 Ω (total from feeder and return conductor)
Noise suppression	50 and 60 Hz
Output	
Output signal	4 ... 20 mA, 2-wire
Auxiliary power	8.5 ... 36 V DC (30 V with Ex ia and ib; 32 V with Ex nL/ic; 35 V with Ex nA)
Max. load	(U_{aux} – 8.5 V)/0.023 A
Overrange	3.6 ... 23 mA, continuously adjustable (default range: 3.84 ... 20.5 mA)
Error signal (following sensor breakage) (conforming to NE43)	3.6 ... 23 mA, continuously adjustable (default range: 3.6 mA or 22.8 mA)
Damping time	0...30 s (default value: 0 s)
Protection	Against reverse polarity
Resolution	12 bit
Accuracy at 23 °C (73.4 °F)	< 0.1% of measuring span
Temperature influence	< 0.1%/10 °C (0.1%/18 °F)
Effect of auxiliary power	< 0.01% of measuring span/V
Effect of load impedance	< 0.025% of the max. measuring span/100 Ω
Long-term drift	• < 0.025% of the max. measuring span in the first month • < 0.035% of the max. measuring span after one year • < 0.05% of the max. measuring span according to 5 years
Ambient conditions	
Ambient temperature	-40 ... +85 °C (-40 ... +185 °F)
Storage temperature	-40 ... +85 °C (-40 ... +185 °F)
Relative humidity	< 98%, with condensation
Electromagnetic compatibility	According to EN 61326 and NAMUR NE21
Structural design	
Weight	50 g (0.11 lb)
Dimensions	See dimensional drawing

© Siemens AG 2026

Technical specifications (continued)

SITRANS TH100 (4 ... 20 mA, Pt100)	
Material	Molded plastic
Cross-section of cables	Max. 2.5 mm² (AWG 13)
Degree of protection according to IEC 60529	
• Enclosure	IP40
• Terminals	IP00
Certificates and approvals	
ATEX explosion protection	
EC type-examination certificate	DEKRA 21ATEX0033X / DEKRA 21ATEX0034X
• "Intrinsic gas safety" type of protection	• II 1 G Ex ia IIC T6...T4 Ga • II 2 (1) G Ex ib [ia Ga] IIC T6...T4 Gb • II 3 (1) G Ex ic [ia Ga] IIC T6...T4 Gc • II 3 G Ex ic IIC T6...T4 Gc
• "Increased safety" type of protection	• II 3 G Ex ec IIC T6...T4 Gc
• "Intrinsic dust safety" type of protection	II 2 D Ex ia IIIC Db
Explosion protection: FM for USA	
• FM approval	FM 3024169
• Degrees of protection	• IS / Cl I, II, III / Div 1 / GP ABCDEFG T6, T5, T4 • Cl I / ZN 0 / AEx ia IIC T6, T5, T4 • NI / Cl I / Div 2 / GP ABCDFG T6, T5, T4 • NI / Cl I / ZN 2 / IIC T6, T5, T4
Explosion protection to FM for Canada ($_c$FM $_{US}$)	
• FM approval	FM 3024169C
• Degrees of protection	• IS / Cl I, II, III / Div 1/ GP ABCDEFG T6, T5, T4 • NI / Cl I / DIV 2 / GP ABCD T6, T5, T4 • NIFW / Cl I, II, III / DIV 2 / GP ABCDFG T6, T5, T4 • DIP / Cl II, III / Div 2 / GP FG T6, T5, T4 • Cl I / ZN 0 / Ex ia IIC T6, T5, T4 • Cl I / ZN 2 / Ex nA nL IIC T6, T5, T4
Other certificates	EAC Ex, NEPSI
Software requirements for SIPROM T	
PC operating system	Windows ME, 2000, XP, Win 7, 8 and 10; in connection with RS 232 modem, also Windows 95, 98 and 98 SE

Factory setting:

- Pt100 (IEC 751) in the 3-wire connection
- Measuring range: 0 ... 100 °C (32 ... 212 °F)
- Fault current in the event of sensor breakage: 22.8 mA
- Sensor offset: 0 °C (32 °F)
- Damping 0.0 s

Dimensional drawings

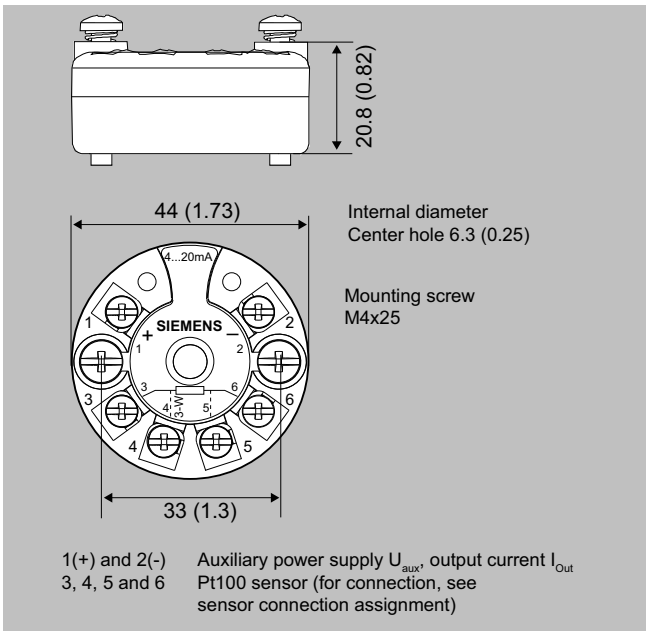

SITRANS TH100, dimensions in mm (inch)

Mounting on DIN rail

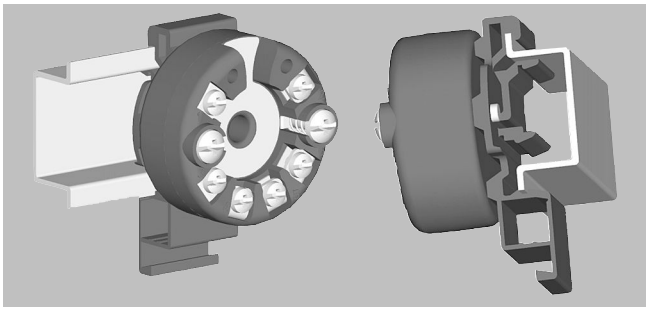

SITRANS TH100, mounting of transmitter on DIN rail

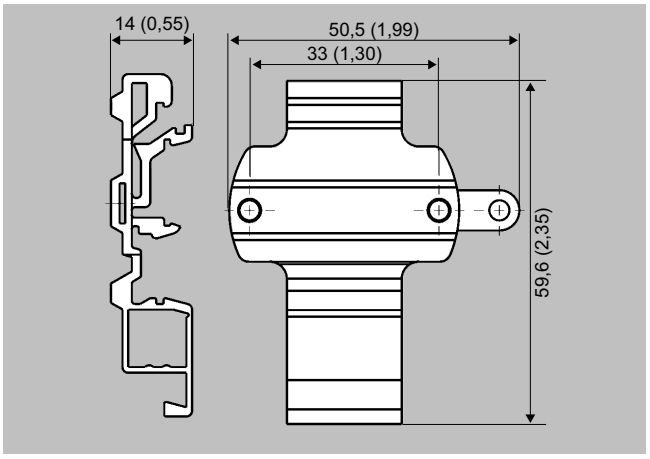

Mounting rail adapter, dimensions in mm (inch)

© Siemens AG 2026

Circuit diagrams

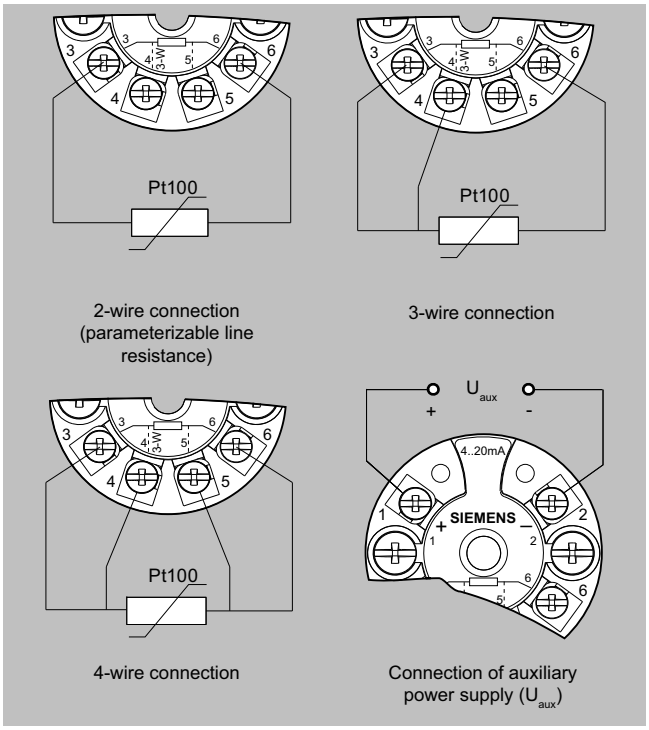

SITRANS TH100, sensor connection assignment