SIEMENS

Data sheet 3VL9216-8TC00

accessory for VL160, current transformer for overload protection of N conductor and for ground-fault protection In=125A/160A

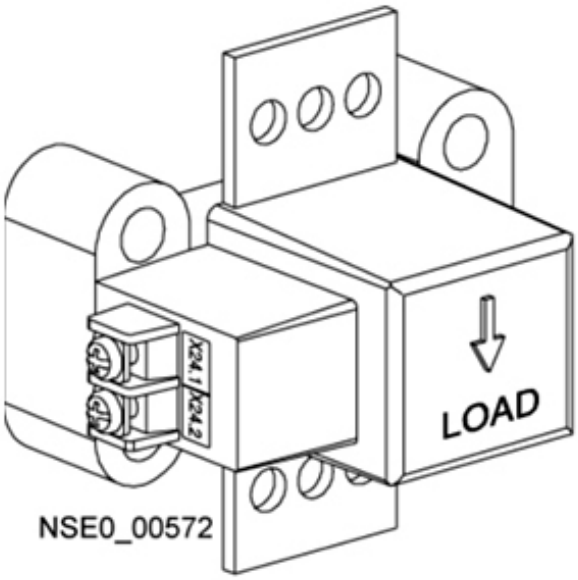

Model	
Product brand name	SENTRON
Accessories	
accessories	Accessories for VL160
Mechanical Design	
Net weight	0.48 kg
Certificates	

Subject to change without notice
© Copyright Siemens

General Product Approval	EMC	Declaration of Conformity	Test Certificates	Shipping Approval	
Miscellaneous	 C-Tick	 EG-Konf.	Special Test Certificate	 PRS	 RINA

Shipping Approval	other			
 RMRS	Environmental Confirmations	Miscellaneous	Confirmation	Manufacturer Declaration

Further information

Information- and Downloadcenter (Catalogs, Brochures,…)
http://www.siemens.com/lowvoltage/catalogs

Industry Mall (Online ordering system)
https://mall.industry.siemens.com/mall/en/en/Catalog/product?mlfb=3VL9216-8TC00

Service&Support (Manuals, Certificates, Characteristics, FAQs,...)
https://support.industry.siemens.com/cs/ww/en/ps/3VL9216-8TC00

Image database (product images, 2D dimension drawings, 3D models, device circuit diagrams, ...)
http://www.automation.siemens.com/bilddb/cax_en.aspx?mlfb=3VL9216-8TC00

CAx-Online-Generator
http://www.siemens.com/cax

Tender specifications
http://www.siemens.com/specifications

Subject to change without notice
© Copyright Siemens

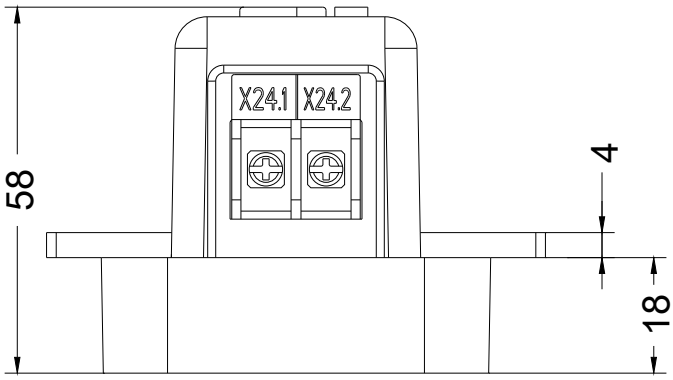

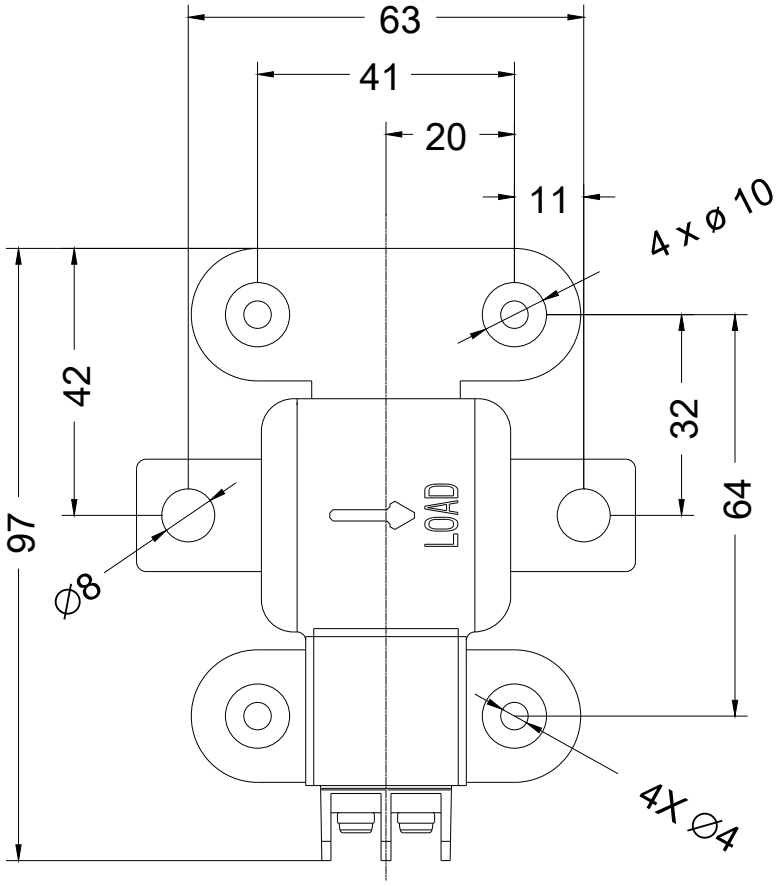

Subject to change without notice
© Copyright Siemens