SIEMENS



SIMATIC

S7-1500 / ET 200MP

Digital output module F-DQ 8x24VDC/2A PPM (6ES7526-2BF00-0AB0)

Manual

Edition 01/2016

Answers for industry.

SIEMENS

SIMATIC

ET 200MP
Digital output module
F-DQ 8x24VDC/2A PPM
(6ES7526-2BF00-0AB0)

Manual

Preface

Documentation guide 1

Product overview 2

Connecting 3

Parameters/address space 4

Applications of the F-I/O module 5

Interrupts/diagnostic messages 6

Technical specifications 7

Response times A

Switching of loads B

Open Source Software C

01/2016

A5E03858037-AA

Legal information

Warning notice system

This manual contains notices you have to observe in order to ensure your personal safety, as well as to prevent damage to property. The notices referring to your personal safety are highlighted in the manual by a safety alert symbol, notices referring only to property damage have no safety alert symbol. These notices shown below are graded according to the degree of danger.

⚠ DANGER

indicates that death or severe personal injury **will** result if proper precautions are not taken.

⚠ WARNING

indicates that death or severe personal injury **may** result if proper precautions are not taken.

⚠ CAUTION

indicates that minor personal injury can result if proper precautions are not taken.

NOTICE

indicates that property damage can result if proper precautions are not taken.

If more than one degree of danger is present, the warning notice representing the highest degree of danger will be used. A notice warning of injury to persons with a safety alert symbol may also include a warning relating to property damage.

Qualified Personnel

The product/system described in this documentation may be operated only by **personnel qualified** for the specific task in accordance with the relevant documentation, in particular its warning notices and safety instructions. Qualified personnel are those who, based on their training and experience, are capable of identifying risks and avoiding potential hazards when working with these products/systems.

Proper use of Siemens products

Note the following:

⚠ WARNING

Siemens products may only be used for the applications described in the catalog and in the relevant technical documentation. If products and components from other manufacturers are used, these must be recommended or approved by Siemens. Proper transport, storage, installation, assembly, commissioning, operation and maintenance are required to ensure that the products operate safely and without any problems. The permissible ambient conditions must be complied with. The information in the relevant documentation must be observed.

Trademarks

All names identified by ® are registered trademarks of Siemens AG. The remaining trademarks in this publication may be trademarks whose use by third parties for their own purposes could violate the rights of the owner.

Disclaimer of Liability

We have reviewed the contents of this publication to ensure consistency with the hardware and software described. Since variance cannot be precluded entirely, we cannot guarantee full consistency. However, the information in this publication is reviewed regularly and any necessary corrections are included in subsequent editions.

Siemens AG
Division Digital Factory
Postfach 48 48
90026 NÜRNBERG
GERMANY

A5E03858037-AA
℗ 01/2016 Subject to change

Copyright © Siemens AG 2016.
All rights reserved

Preface

Purpose of the documentation

This manual supplements the system manual S7-1500 Automation System. You can find information on the functions that apply generally to the S7-1500 automation system and the ET 200MP distributed I/O system in the system manual S7-1500 Automation System (http://support.automation.siemens.com/WW/view/en/59191792).

The information provided in this manual and the system manual enables you to commission the S7-1500 automation system and ET 200MP distributed I/O system.

Conventions

STEP 7: In this documentation, "STEP 7" is used as a synonym for all versions of the configuration and programming software "STEP 7 (TIA Portal)".

Please also observe the notes identified as follows:

Note

A note includes important information on the product described in the documentation, on handling the product or on the part of the documentation to which particular attention should be paid.

Important note for maintaining the operational safety of your system

Note

The operators of systems with safety-related characteristics must adhere to specific operational safety requirements. The supplier is also obliged to comply with special product monitoring measures. Siemens informs system operators by means of personal notifications about product developments and properties which may be or become important issues in terms of operational safety.

You should subscribe to the corresponding notifications in order to obtain the latest information and to allow you to make any necessary modifications to your system.

Log in to Industry Online Support. Follow the links below and click on "Email on update" on the right-hand side in each case:

- SIMATIC S7-300/S7-300F (https://support.industry.siemens.com/cs/products?pnid=13751&lc=en-WW)
- SIMATIC S7-400/S7-400H/S7-400F/FH (https://support.industry.siemens.com/cs/products?pnid=13828&lc=en-WW)
- SIMATIC S7-1500/SIMATIC S7-1500F (https://support.industry.siemens.com/cs/products?pnid=13716&lc=en-WW)
- SIMATIC S7-1200/SIMATIC S7-1200F (https://support.industry.siemens.com/cs/products?pnid=13683&lc=en-WW)
- Distributed I/O (https://support.industry.siemens.com/cs/products?pnid=14029&lc=en-WW)
- STEP 7 (TIA Portal) (https://support.industry.siemens.com/cs/products?pnid=14340&lc=en-WW)

Security information

Siemens provides products and solutions with industrial security functions that support the secure operation of plants, solutions, machines, equipment and/or networks. They are important components in a holistic industrial security concept. With this in mind, Siemens' products and solutions undergo continuous development. Siemens recommends strongly that you regularly check for product updates.

For the secure operation of Siemens products and solutions, it is necessary to take suitable preventive action (e.g. cell protection concept) and integrate each component into a holistic, state-of-the-art industrial security concept. Third-party products that may be in use should also be considered. You can find more information about industrial security on the Internet (http://www.siemens.com/industrialsecurity).

To stay informed about product updates as they occur, sign up for a product-specific newsletter. You can find more information on the Internet (http://support.automation.siemens.com).

Open Source Software

Open-source software is used in the firmware of the product described. Open Source Software is provided free of charge. We are liable for the product described, including the open-source software contained in it, pursuant to the conditions applicable to the product. Siemens accepts no liability for the use of the open source software over and above the intended program sequence, or for any faults caused by modifications to the software.

For legal reasons, we are obliged to publish the original text of the license conditions and copyright notices. Please read the information relating to this in the appendix.

Table of contents

Preface **4**

1 Documentation guide **9**

1.1 Guide to documentation S7-1500 / ET 200MP 9

2 Product overview **12**

2.1 Properties 12

3 Connecting **15**

3.1 Block diagram 15

4 Parameters/address space **18**

4.1 Parameters 18

4.2 Explanation of parameters 20
4.2.1 F-parameters 20
4.2.1.1 Behavior after channel fault 20
4.2.1.2 Reintegration after channel fault 20
4.2.2 DQ parameters 21
4.2.2.1 Maximum test period 21
4.2.2.2 Operating mode of the output 21
4.2.3 Parameters of the channels 21
4.2.3.1 Diagnostics: Wire break 21
4.2.3.2 Channel activated 21
4.2.3.3 Channel failure acknowledge 22
4.2.3.4 Max. readback time dark test 22
4.2.3.5 Disable dark test for 48 hours 25
4.2.3.6 Max. readback time switch-on test 26
4.2.3.7 Activated light test 28

4.3 Address space 30

5 Applications of the F-I/O module **32**

5.1 Applications for the F-DQ 8x24VDC/2A PPM 32

5.2 Application: Connecting a load per digital output, PM switching 33

5.3 Application: Connection of loads per digital output to L+ and M, PM-switching mode 34

5.4 Application: Connecting 2 loads in parallel per digital output, PM-switching mode 37

5.5 Application: Connecting a load per digital output, PP switching 39

6 Interrupts/diagnostic messages **41**

6.1 Status and error displays 41

6.2 Interrupts 44

6.3 Diagnostic alarms 46

7 Technical specifications 51
A Response times 54
B Switching of loads 55
B.1 Connecting capacitive loads 55
B.2 Switching of inductive loads 57
C Open Source Software 58

Documentation guide

1

1.1 Guide to documentation S7-1500 / ET 200MP

The documentation for the SIMATIC S7-1500 automation system and the SIMATIC ET 200MP distributed I/O system is arranged into three areas.
This arrangement enables you to access the specific content you require.

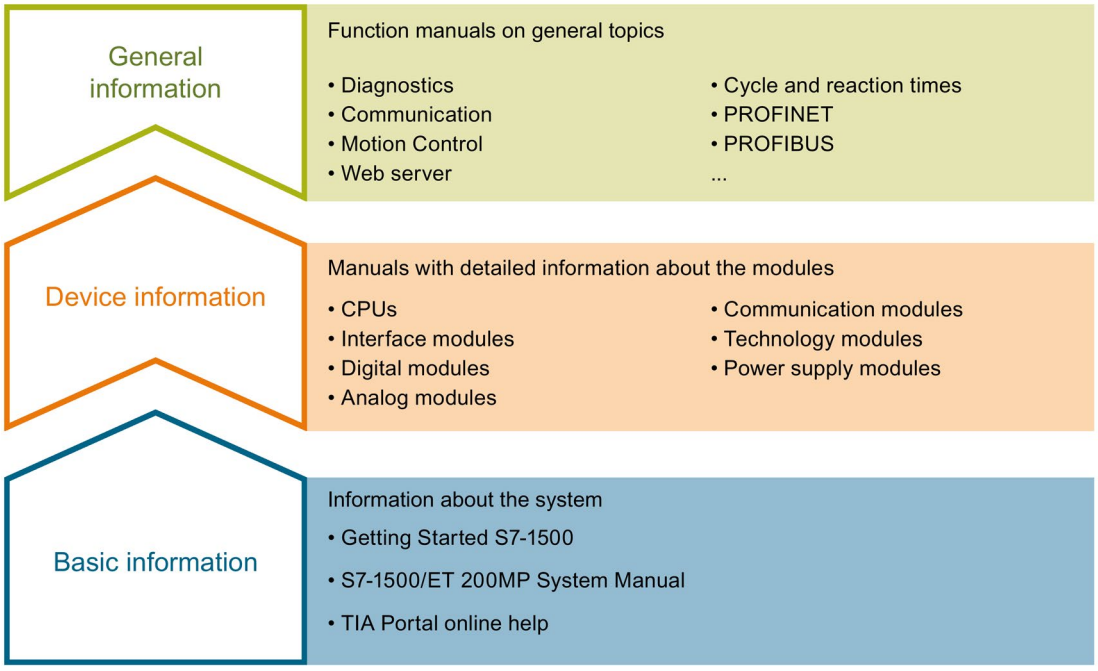

Basic information

The System Manual and Getting Started describe in detail the configuration, installation, wiring and commissioning of the SIMATIC S7-1500 and ET 200MP systems. The STEP 7 online help supports you in the configuration and programming.

Device information

Product manuals contain a compact description of the module-specific information, such as properties, wiring diagrams, characteristics and technical specifications.

General information

The function manuals contain detailed descriptions on general topics regarding the SIMATIC S7-1500 and ET 200MP systems, e.g. diagnostics, communication, Motion Control, Web server.

You can download the documentation free of charge from the Internet (http://www.automation.siemens.com/mcms/industrial-automation-systems-simatic/en/manual-overview/tech-doc-controllers/Pages/Default.aspx).

Changes and supplements to the manuals are documented in a Product Information.

You can download the product information free of charge from the Internet.

Manual Collection S7-1500/ET 200MP

The Manual Collection contains the complete documentation on the SIMATIC S7-1500 automation system and the ET 200MP distributed I/O system gathered together in one file.

You can find the Manual Collection on the Internet (http://support.automation.siemens.com/WW/view/en/86140384).

"mySupport"

With "mySupport", your personal workspace, you make the best out of your Industry Online Support.

In "mySupport", you can save filters, favorites and tags, request CAx data and compile your personal library in the Documentation area. In addition, your data is already filled out in support requests and you can get an overview of your current requests at any time.

You must register once to use the full functionality of "mySupport".

You can find "mySupport" on the Internet.

"mySupport" - Documentation

In the Documentation area in "mySupport" you can combine entire manuals or only parts of these to your own manual.
You can export the manual as PDF file or in a format that can be edited later.

You can find "mySupport" - Documentation on the Internet (http://support.industry.siemens.com/My/ww/en/documentation).

"mySupport" - CAx data

In the CAx data area in "mySupport", you can access the current product data for your CAx or CAe system.

You configure your own download package with a few clicks.

In doing so you can select:

- Product images, 2D dimension drawings, 3D models, internal circuit diagrams, EPLAN macro files
- Manuals, characteristics, operating manuals, certificates
- Product master data

You can find "mySupport" - CAx data on the Internet (http://support.industry.siemens.com/my/ww/en/CAxOnline).

Application examples

The application examples support you with various tools and examples for solving your automation tasks. Solutions are shown in interplay with multiple components in the system - separated from the focus on individual products.

You will find the application examples on the Internet (https://support.industry.siemens.com/sc/ww/en/sc/2054).

TIA Selection Tool

With the TIA Selection Tool, you can select, configure and order devices for Totally Integrated Automation (TIA).
This tool is the successor of the SIMATIC Selection Tool and combines the known configurators for automation technology into one tool.
With the TIA Selection Tool, you can generate a complete order list from your product selection or product configuration.

You can find the TIA Selection Tool on the Internet (http://w3.siemens.com/mcms/topics/en/simatic/tia-selection-tool).

Product overview

2

2.1 Properties

Order number

6ES7526-2BF00-0AB0

View of the module

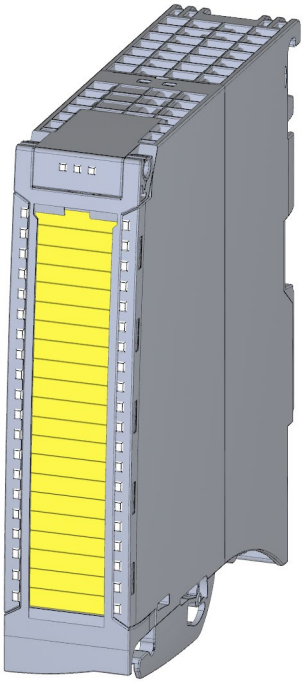

Image 2-1 View of the F-DQ 8x24VDC/2A PPM module

Properties

- Technical properties
  - Fail-safe digital module for use in the S7-1500 automation system and in the ET 200MP distributed I/O system.
  - PROFIsafe
  - PROFIsafe address type 2
  - Supports the RIOforFA-Safety profile (on S7-1500 F-CPUs)
  - 8 output PM-switching or PP-switching in 2 channel groups (SIL3/Cat.4/PLe)
  - Supply voltage L+
  - Output current per output 2 A
  - Source output (PM/PP-switching)
  - Suitable for solenoid valves, DC contactors and signal lamps
  - Status display RUN (green LED)
  - Status display module diagnostics (red LED)
  - Status display channel status/channel diagnostics per output (green/red LED)
  - Status display supply voltage (green LED)
  - Diagnostics, e.g., short-circuit/wire break/load voltage missing, channel-specific
  - Channel-specific or module-wide passivation
- Supported functions
  - Firmware update
  - I&M identification data

⚠ WARNING

The fail-safe performance characteristics in the technical specifications apply for a mission time of 20 years and a repair time of 100 hours. If a repair within 100 hours is not possible, switch off the supply voltage of the affected module before 100 hours expires. The module switches off independently after the 100 hours have expired.

Follow the repair procedure described in section Diagnostic alarms (Page 46).

Accessories

The following accessories are supplied with the module and can also be ordered as spare part:

- Labeling strips
- U-connector
- Universal front cover
- Electronic coding element

Additional components

The following component is to be ordered separately:

- Front connector incl. potential bridges and cable ties

You can find additional information on accessories in the S7-1500/ET 200MP (http://support.automation.siemens.com/WW/view/en/59191792) system manual.

Passivation of fail-safe outputs over a long period of time

WARNING

Unintentional activation of F-I/O with fail-safe outputs

If an F-I/O with fail-safe outputs is passivated for a period longer than that specified in the safety parameters (> 100 hours) and the fault remains uncorrected, you need to exclude the possibility that the F-I/O can be activated unintentionally by a second fault, and thus place the F-system in a dangerous state.

Even though it is highly unlikely that such hardware faults occur, you must prevent the unintentional activation of F-I/O with fail-safe outputs by using circuit measures or organizational measures.

One possibility is the shutdown of the power supply of the passivated F-I/O within a time period of 100 hours, for example.

The required measures are standardized for plants with product standards.

For all other plants, the plant operator must create a concept for the required measures and have it approved by the inspector.

Property of the individual shutdown of F-modules with fail-safe outputs:

A channel-specific shutdown occurs when a fault is detected. It is also possible to react to critical process states staggered over time or to perform safety-related shutdown of individual outputs.

Connecting

3

3.1 Block diagram

This section includes:

- The block diagram with the general pin assignment of the F-module.
- An example for switching of loads with ground.

For information on parameter assignment of the F-module, refer to "Parameters/address space (Page 18)".

Information on different connection options is available in the section Applications of the F-I/O module (Page 32).

You can find information on wiring the front connectors and creating the cable shielding, etc., in the Wiring section of the system manual Automation System S7-1500 (http://support.automation.siemens.com/WW/view/en/59191792).

WARNING
To protect the F-module, always install an external fuse with the following properties for the load circuit: Circuit-breaker 24 V DC/16 A, tripping characteristic type B.

Block diagram

The following figure shows the assignment of channels to addresses.

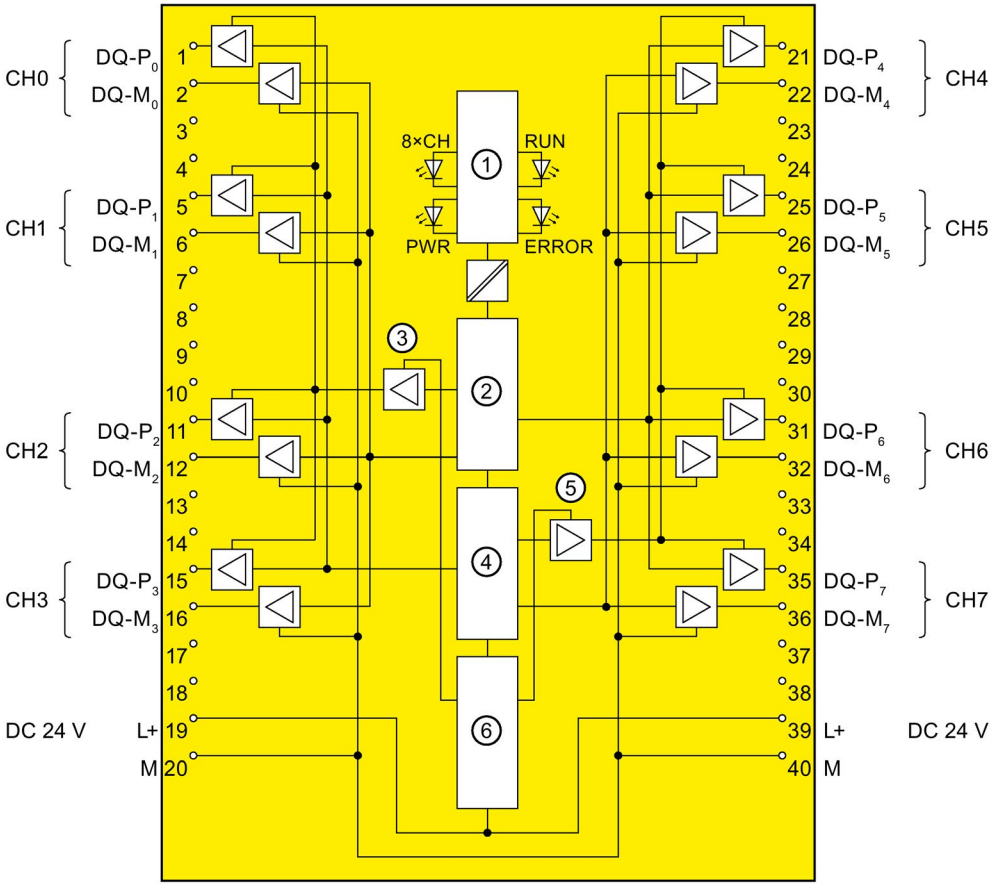

①	Backplane bus interface	$DQ\text{-}M_n$	Ground for output bit n, channel n, M-switching
②	Microcontroller 1	L+	Supply voltage 24 V DC
③	P1 switch for channel groups 0 to 3	M	Chassis ground
④	Microcontroller 2	CH	Channel or LED channel status, channel diagnostics (green, red)
⑤	P1 switch for channel groups 4 to 7	PWR	LED supply voltage (green)
⑥	Reverse polarity protection	RUN	RUN LED (green)
$DQ\text{-}P_n$	Output bit n, channel n, P-switching	ERROR	LED module diagnostics (red)

Note:

- In PP operation, the DQ M channels are not used.
- Terminal 19 and 39 (L+) bridged internally
- Terminal 20 and 40 (M) bridged internally

  Note the maximum permissible cable cross-sections and use both terminals, if necessary.

Image 3-1 Block diagram of the F-DQ 8x24VDC/2A PPM

Switching of loads with ground if the F-module is configured PM-switching

If the following two conditions are met, F-DQ 8x24VDC/2A PPM detects a short-circuit:

- If loads that have a connection between chassis and ground are switched by the F-DQ 8x24VDC/2A PPM (for example, to improve the EMC properties).
- If chassis and ground are connected at the power supply unit.

From the perspective of the F-module, the M-switch is bridged by the chassis-ground connection (refer to the diagram below for an example).

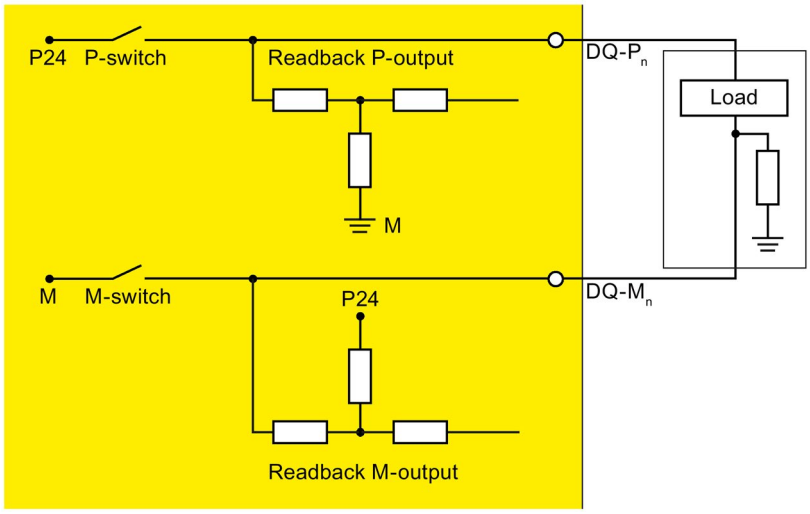

Image 3-2 Switching of grounded loads (resistance between chassis and ground)

Remedy:

- Increase the parameters "Max. readback time dark test" and "Max. readback time switch-on test".
- Increase the value of the resistance between chassis and ground at the load end to more than 100 kΩ.

Or:

- Use the F-DQ 8x24VDC/2A PPM configured as a PP-switching module.

Parameters/address space

4

4.1 Parameters

Parameters

> **WARNING**
>
> Diagnostic functions must be activated or deactivated in accordance with the application, see section Applications of the F-I/O module (Page 32).

Table 4- 1 Parameters for F-DQ 8x24VDC/2A PPM

Parameter	Value range	Parameter reassignment in RUN	Scope
F-parameters:			
Manual assignment of F-monitoring time	• Disable • Enable	No	Module
F-monitoring time	1 to 65535 ms	No	Module
F-source address	1 to 65534	No	Module
F-destination address	1 to 65534	No	Module
F-parameter signature (without address)	0 to 65535	No	Module
Behavior after channel fault	• Passivate channel • Passivate the entire module	No	Module
Reintegration after channel fault	• Adjustable • All channels automatically • All channels manually	No	Module
F-I/O DB manual number assignment	• Disable • Enable	No	Module
F-I/O DB-number	—	No	Module
F-I/O DB name	—	No	Module
DQ parameters:			
Maximum test period	• 100 s • 1000 s	No	Module
Operating mode of the output	• PM-switching mode • PP switching	No	Module

Parameter	Value range	Parameter reassignment in RUN	Scope
Channel parameters in operating mode PM-switching:			
Channel n			
Diagnostics: Wire break	• Disable • Enable	No	Channel
Channel activated	• Disable • Enable	No	Channel
Channel failure acknowledge	• Manual • Automatic The value range offered depends on the F-CPU in use and on the configuration of the F-parameter "Reintegration after channel fault".	No	Channel
Max. readback time dark test	0.8 to 400.0 ms	No	Channel
Disable dark test for 48 hours	• Disable • Enable	No	Channel
Max. readback time switch on test	0.8 to 5.0 ms	No	Channel
Activated light test	• Disable • Enable	No	Channel
Channel parameters in operating mode PP-switching:			
Channel n			
Diagnostics: Wire break	• Disable • Enable	No	Channel
Channel activated	• Disable • Enable	No	Channel 1...7 (Channel 0 always enabled)
Channel failure acknowledge	• Manual • Automatic The value range offered depends on the F-CPU in use and on the configuration of the F-parameter "Reintegration after channel fault".	No	Channel
Max. readback time dark test	0.8 to 400.0 ms	No	Module (Channel 0)
Disable dark test for 48 hours	Disable	No	Module
Max. readback time switch on test	0.8 to 5.0 ms	No	Module (Channel 0)
Activated light test	Enable	No	Module

4.2 Explanation of parameters

4.2.1 F-parameters

You must assign the PROFIsafe address (F-destination address together with F-source address) to the F-module before you put it into operation.

- You define the F-source address using the "Basis for PROFIsafe addresses" parameter in the F-CPU.
- An F-destination address unique throughout the CPU is automatically assigned for each F-module. You can manually change the F-destination addresses set in the hardware configuration.

You can find information on F-parameters for the F-monitoring time, the PROFIsafe address assignment (F-source address, F-destination address) and the F I/O DB in the manual SIMATIC Safety - Configuring and Programming (http://support.automation.siemens.com/WW/view/en/54110126).

4.2.1.1 Behavior after channel fault

This parameter is used to specify whether the entire F-module is passivated or just the faulty channel(s) in the event of channel faults:

- "Passivate the entire module"
- "Passivate channel"

4.2.1.2 Reintegration after channel fault

Use this parameter to select how the channels of the fail-safe module are reintegrated after a fault.

Use in S7-300/400 F-CPUs

This parameter is always set to "Adjustable" when you use the fail-safe module in S7-300/400 F-CPUs.

You make the required setting in the F-I/O DB of the fail-safe module.

Use in S7-1500 F-CPUs

When using the fail-safe module in S7-1500 F-CPUs, you set this parameter in the STEP 7 dialog of the fail-safe module:

- "Adjustable"
- "All channels automatically"
- "All channels manually"

If you have set the "Behavior after channel fault" parameter to "Passivate channel", you enable individual setting of the reintegration type per channel with the parameter assignment "Adjustable". The reintegration type of the respective channel is specified with the "Channel failure acknowledge" channel parameter.

If you have set the "Behavior after channel fault" parameter to "Passivate the entire module", you can only select the same reintegration type for all channels.

4.2.2 DQ parameters

4.2.2.1 Maximum test period

With this parameter, you specify the time within which the light, dark and switch on tests should be performed throughout the module. When this time expires, the tests are repeated. In case of a fault, the test time is reduced to 60 seconds.

- Use "1000 s", for example, to conserve your actuators.
- Use "100 s" to detect faults more quickly.

The "Maximum test period" parameter is a module parameter, which means the test cycle for the entire fail-safe output module is performed within the configured maximum test time. If the bit pattern test is not performed within the configured time (or the shortened test time of 60 seconds in case of an error), the module goes into the error state.

4.2.2.2 Operating mode of the output

Chooses between PM and PP switching mode for the outputs.

After re-parameterization of the operating mode, the power supply of the F-module must be switched OFF and ON.

4.2.3 Parameters of the channels

4.2.3.1 Diagnostics: Wire break

You can use a wire break test to monitor the connection from the output channel to the actuator.

Selecting this check box enables the wire break monitoring for the relevant channel.

You also have to activate the light test to detect a wire break with an output signal "0".

⚠ WARNING
The diagnostics for wire break of the outputs is not designed for safety-related functions and can therefore not be evaluated for safety-related activities.

4.2.3.2 Channel activated

If you select this check box, the corresponding channel is enabled for signal processing in the safety program.

You can deactivate an unused channel with this parameter.

4.2.3.3 Channel failure acknowledge

Use in S7-1500 F-CPUs

This parameter is only relevant if the fail-safe module is operated on an S7-1500 F-CPU, and can only be set if the F-parameter "Behavior after channel fault" is set to "Passivate channel" and the F-parameter "Reintegration after channel fault" is set to "Adjustable".

The value of this parameter specifies how the channel should react to a channel fault:

- Manual: A channel is not reintegrated until after manual acknowledgment.
- Automatically: The channel is reintegrated automatically after a channel fault. Manual acknowledgment is not necessary.

Use in S7-300/400 F-CPUs

The value of this parameter is not relevant in the case of operation on S7-300/400 F-CPUs. There you set the corresponding property at the F-I/O DB by means of the ACK_NEC tag.

For detailed information about the F-I/O DB, refer to the SIMATIC Safety – Configuring and Programming (http://support.automation.siemens.com/WW/view/en/54110126) manual.

4.2.3.4 Max. readback time dark test

Function

Dark tests are shutdown tests with bit pattern test.

For a dark test, a test signal is switched to the output channel while the output channel is active (output signal "1"). The output channel is then switched off briefly (= "dark period") and read back (for **PM operation**, P- and M-readback, for **PP operation** only PP-readback). A sufficiently slow actuator does not respond to this and remains switched on.

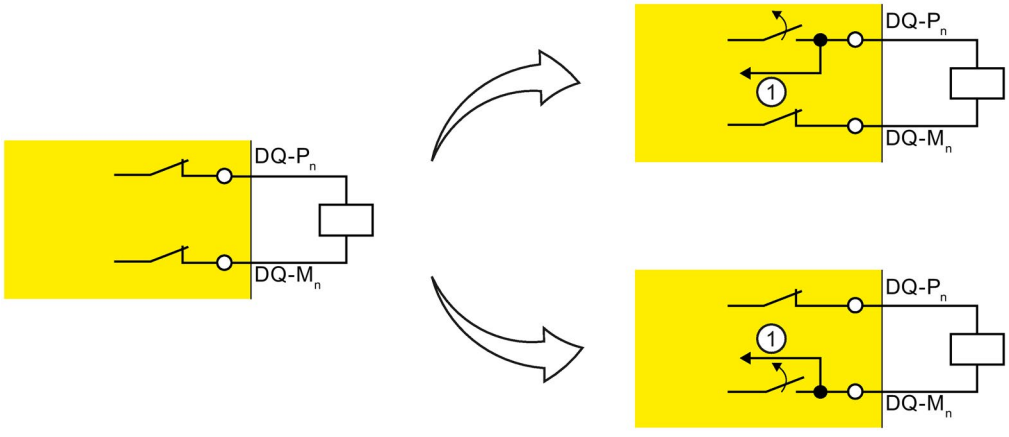

① Readback (P-switch and M-switch do not switch simultaneously.)

Image 4-1 Functional principle of the dark test (PM switching)

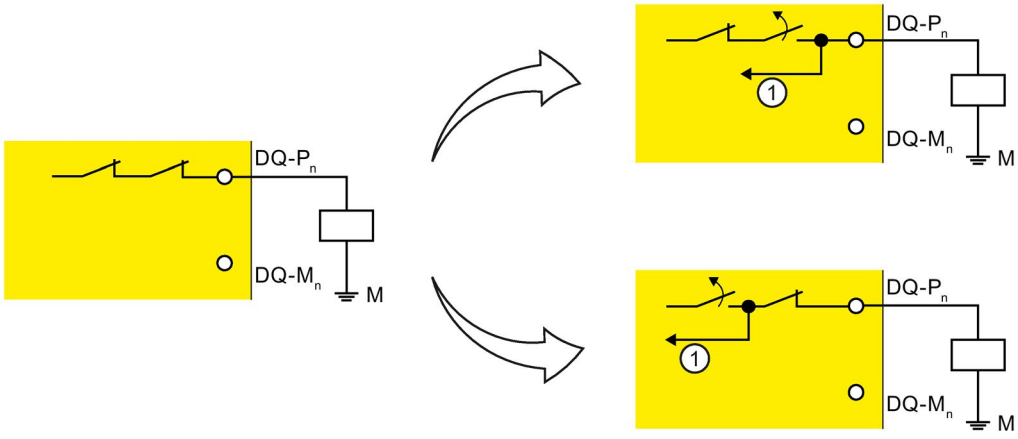

① Readback (The two P-switches do not switch simultaneously.)

Image 4-2 Functional principle of the dark test (PP switching)

This parameter allows you to set the time for the readback.

If the expected signals could not be read back correctly after expiration of the readback time, the output channel is passivated.

No new process values are switched to the output channels while a bit pattern is still active (switch test is carried out). This means that a higher maximum readback time for the dark test increases the response time of the F-module.

⚠ WARNING

Through the configured readback time dark test, short-circuits (cross-circuits) to a signal with a frequency greater than 1/(2 x configured readback time dark test) Hz cannot be recognized (50:50 sampling ratio).

Short-circuits (cross-circuits) to an output of the same module are recognized.

The parameter also has an effect on the short-circuit detection (cross-circuit) with "1" signal when the output signal is changed from "1" to "0" with the safety program.

Setting readback time dark test

Because the fault reaction time is extended by the length of the readback time dark test, we recommend that you set the readback time dark test as low as possible, but high enough that the output channel is not passivated.

In case of the "Connecting a load per digital output, PP switching" (Page 39) application, see the warnings and notes in the section describing the application.

To determine the readback time required for your actuator, refer to the diagram in the section Switching capacitive loads (Page 55).

Setting readback time dark test with unknown actuator capacity

If the capacity of the actuator is not known, it may be necessary for you to determine the value for the readback time dark test by trial and error. This may also be necessary due to the part variances in the actuator or external influences.

Proceed as follows:

- Set the readback time dark test so that the output channel can be read back correctly but your actuator does not respond yet.
- For verification use the process value "1" with a minimum duration that corresponds to the "maximum test time" parameter.
- If the output channel is passivated sporadically, set a higher value for the maximum readback time dark test.
- If the output channel is passivated, the readback time dark test is too small for a connected capacitive load. The discharge cannot take place during the configured readback time dark test. Increase the readback time dark test.

If you have set the readback time dark test to the maximum value of 400 ms and there is still a passivation of the output channel, there is either an external fault or the connected capacity is outside the permitted range.

To increase availability, we recommend that you maintain an interval to the determined limit for the times.

Test pulses of the dark test

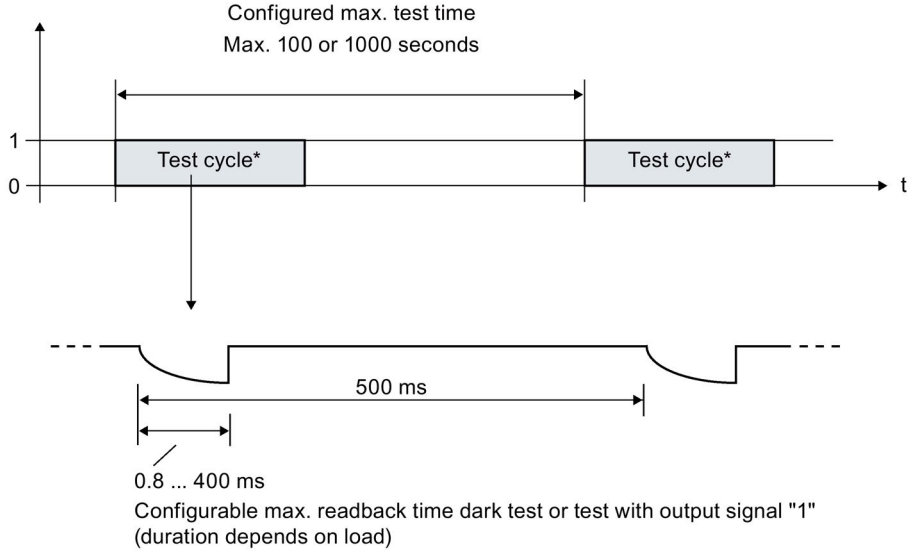

* Output of test pulses only during test cycle.

Image 4-3 Test pulses of the dark test

The interval between two test pulses is 500 ms.

4.2.3.5 Disable dark test for 48 hours

Note

Can only be configured for **PM operation**.

This option allows you to suppress the dark test.

If the channel is permanently active (1) for 48 hours, one dark test pulse is applied at the channel once this time has expired.

You must ensure the signal change from 1 to 0 at the channel yourself within 48 hours to prevent the dark test pulse. This also applies to the operating time if the operating time is < 48 hours. The dark test is suspended for another 48 hours after the signal change from 0 to 1.

The dark test is permanently suppressed if the following condition is met:

- A signal change from 1 to 0 takes place before the 48 hours have expired.

⚠ WARNING

When you use the function "Disable dark test for 48 hours", cross-circuits and other errors are not detected.

Also take into consideration the respective requirements of your product standards regarding error detection time.

4.2.3.6 Max. readback time switch-on test

Function

The switch on test is part of the bit pattern test.

PM operation

During the switch-on test in PM operation, the P-switch and M-switch of the output channel are alternately closed and read back when the output channel is inactive (output signal "0"). Contrary to the light test, no power flows through the connected load during the switch on test.

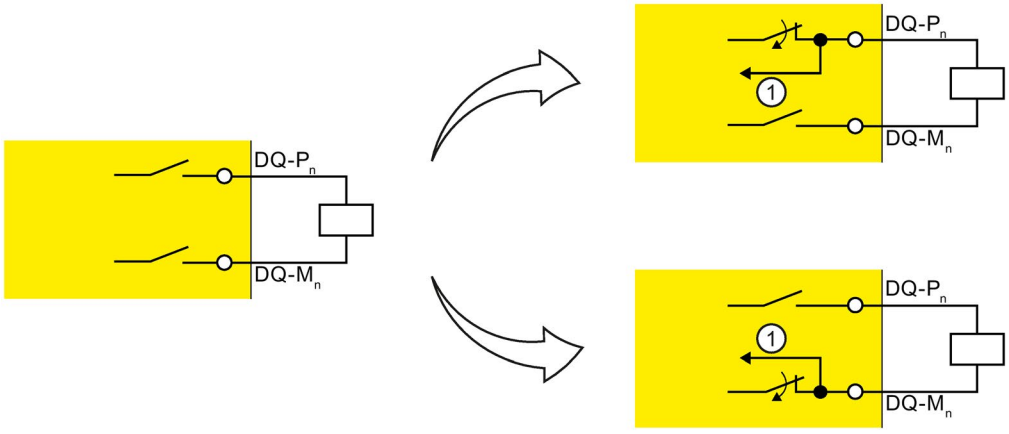

① Readback

Image 4-4 Functional principle of the switch on test (PM switching)

WARNING

In case of an error, the bit pattern test can apply voltage to the load up to a duration that was configured with the "Maximum readback time switch on test" parameter.

For capacitive loads, it can happen that these are not actively discharged in the event of an error.

Therefore, always configure a maximum readback time that cannot activate the load under any circumstances.

PP operation

The M-switch is meaningless during the switch-on test in PP operation. The switch-on test corresponds to the light test and current flows through the load. The light test is always activated in PP operation.

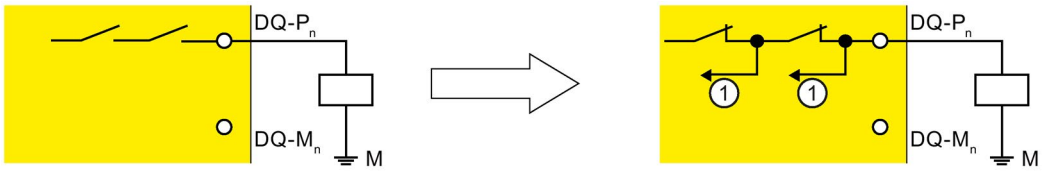

① Readback

Image 4-5 Functional principle of the switch on test (PP switching)

This parameter allows you to set the time for the readback.

If the signal was not read back correctly once the time has expired, the output channel is passivated.

The switch on test detects the following faults:

- Short-circuit to L+ with output signal "0"
- Short-circuit to ground with output signal "0"

WARNING

Through the configured readback time, short-circuits (cross-circuits) to an interfering signal with a frequency > 1 / (2 x configured readback time) Hz can be suppressed (50:50 sampling ratio).

Short-circuits (cross-circuits) to an output of the same module are recognized.

Setting readback time switch on test

Because the fault reaction time is extended by the length of the set readback time, we recommend that you set the readback time as low as possible, but high enough that the output channel is not passivated.

To determine the readback time required for your actuator, refer to the diagram in the section Switching capacitive loads (Page 55).

Setting readback time switch on test with unknown actuator capacity

If the capacitance of the actuator is not known, you may have to determine the required value for the readback time switch-on test by trial and error. This may also be necessary due to the part variances in the actuator or external influences.

Proceed as follows:

- Set the readback time switch on test in such a way that the output channel can be read back correctly but your actuator does not respond yet.
- For verification use the process value "0" with a minimum duration that corresponds to the "maximum test time" parameter. If you have not configured a light test, continue by changing the process value to "1" after the verification.
- If the output channel is passivated sporadically, set a higher value for the maximum readback time switch on test.
- If the output channel is passivated, the readback time is too small for a connected capacitive load. The charge of the capacitive load cannot take place during the configured readback time. Increase the readback time.

If you have set the readback time to the maximum value of 5 ms and there is still a passivation of the output channel, there is either an external fault or the connected capacity is outside the permitted range.

To increase availability, we recommend that you maintain an interval to the determined limit for the times.

4.2.3.7 Activated light test

Function

Overload and wire break are detected with a 0 signal at the output.

For a light test, a test signal is switched to the output channel while the output channel is inactive (output signal "0"). The output channel is switched on briefly during the light test (= "light period") and read back. A sufficiently slow actuator does not respond to this and remains switched off.

PM operation

In contrast to the switch on test, the P-switch and the M-switch switch at the same time during the light test and power flows through the connected load.

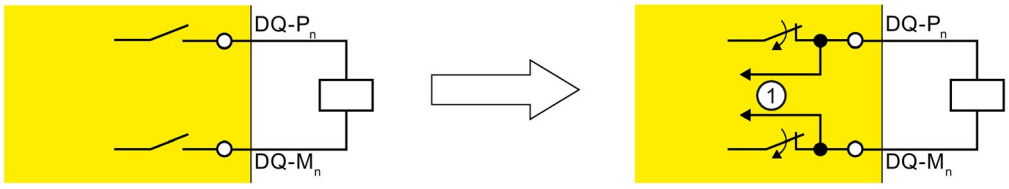

① Readback

Image 4-6 Functional principle of the light test (PM switching)

PP operation

The M-switch is meaningless during the light test in PP operation. The light test corresponds to the switch-on test and current flows through the load. The light test is always activated in PP operation.

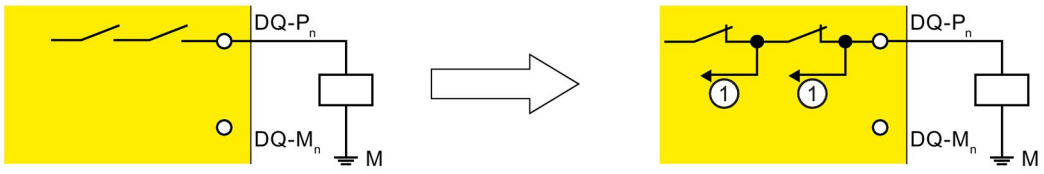

① Readback

Image 4-7 Functional principle of the light test (PP switching)

If the readback signals are incorrect, the signal is present for the configured readback time at the output channel before the fault causes passivation of the output channel.

If the signal was not read back correctly once the maximum readback time switch on test has expired, the output channel is passivated.

No new process values are switched to the output channels while a bit pattern is still active (switch test is carried out). This means that a higher maximum readback time switch on test for the light test increases the response time of the F-module.

Test pulses of the light test

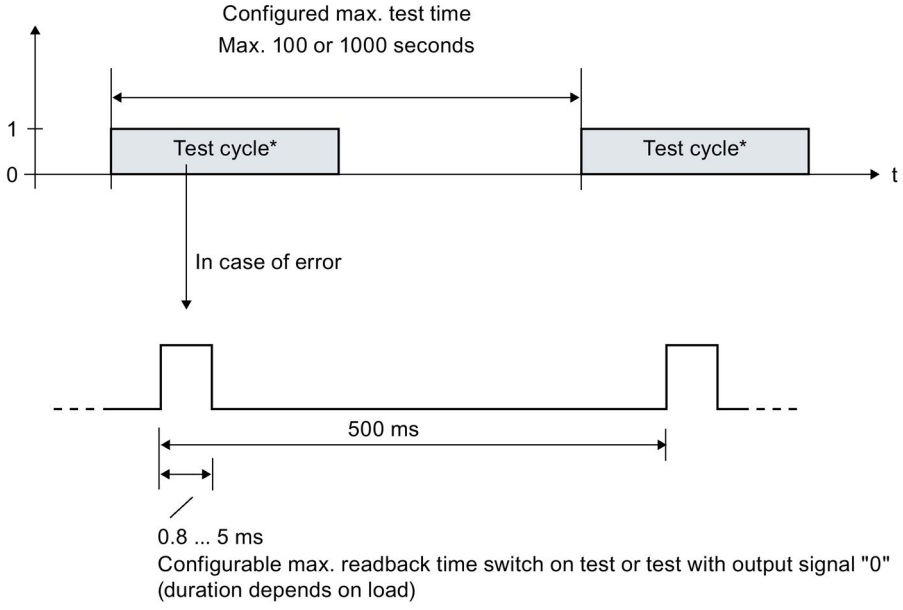

* Output of test pulses only during test cycle. The module cycle is 5 ms.

Image 4-8 Test pulses of the light test

A light pulse with the configured duration takes place within the configured maximum test time per output channel.

If a light pulse returns a fault, the same light pulse (which means the same bit pattern) is repeated once after 500 ms. If the fault is still present, the maximum test time is automatically reduced to 60 seconds and a diagnostic message is generated. If the fault is no longer present, the output channel is reintegrated after the next fault-free test cycle.

4.3 Address space

Address assignment of the digital output module F-DQ 8x24VDC/2A PPM

The digital output module F-DQ 8x24VDC/2A PPM occupies the following address areas in the F-CPU:

Table 4- 2 Address assignment in the F-CPU

Occupied bytes in the F-CPU:		
F-CPU	**In input range**	**In output range**
S7-300/400 F-CPUs	x + 0 to x + 4	x + 0 to x + 4
S7-1500 F-CPUs	x + 0 to x + 5	x + 0 to x + 5

x = Module start address

Address assignment of the user data and the value status of digital output module F-DQ 8x24VDC/2A PPM

The user data occupy the following addresses in the F-CPU out of all the assigned addresses of the digital output module F-DQ 8x24VDC/2A PPM:

Table 4- 3 Address assignment of user data **in the input range**

Byte in the F-CPU	Assigned bits in F-CPU per F-module:							
	7	**6**	**5**	**4**	**3**	**2**	**1**	**0**
IB x + 0	Value status DQ_7 (CH7)	Value status DQ_6 (CH6)	Value status DQ_5 (CH5)	Value status DQ_4 (CH4)	Value status DQ_3 (CH3)	Value status DQ_2 (CH2)	Value status DQ_1 (CH1)	Value status DQ_0 (CH0)

x = Module start address

Table 4- 4 Address assignment of user data **in the output range**

Byte in the F-CPU	Assigned bits in F-CPU per F-module:							
	7	**6**	**5**	**4**	**3**	**2**	**1**	**0**
QB x + 0	DQ_7 (CH7)	DQ_6 (CH6)	DQ_5 (CH5)	DQ_4 (CH4)	DQ_3 (CH3)	DQ_2 (CH2)	DQ_1 (CH1)	DQ_0 (CH0)

x = Module start address

Note

You may only access the addresses occupied by user data and value status.

The other address areas occupied by the F-modules are assigned for functions including safety-related communication between the F-modules and F-CPU in accordance with PROFIsafe.

Additional information

For detailed information about F-I/O access and for evaluation and processing of the value status, refer to the SIMATIC Safety – Configuring and Programming (http://support.automation.siemens.com/WW/view/en/54110126) manual.

Applications of the F-I/O module

5

5.1 Applications for the F-DQ 8x24VDC/2A PPM

You achieve SIL3/Cat.4/PLe with the following applications.

The wiring is carried out on the front connector of the module. Refer to the "Wiring" section in the S7-1500 Automation System (http://support.automation.siemens.com/WW/view/en/59191792) system manual.

See also

Connecting (Page 15)

5.2 Application: Connecting a load per digital output, PM switching

Each of the 8 fail-safe digital outputs consists of a P-switch DQ-P_n and an M-switch DQ-M_n. You connect the load between the P-switch and the M-switch. The two switches are always activated so that voltage is applied to the load. This circuit achieves SIL3/Cat.4/PLe.

The figure below shows an example of the pin assignment of the fail-safe digital output module F-DQ 8x24VDC/2A PPM with connection of one load per digital output, PM switching.

⚠ WARNING

To protect the F-module, always install an external fuse with the following properties for the load circuit: Circuit-breaker 24 V DC/16 A, tripping characteristic type B.

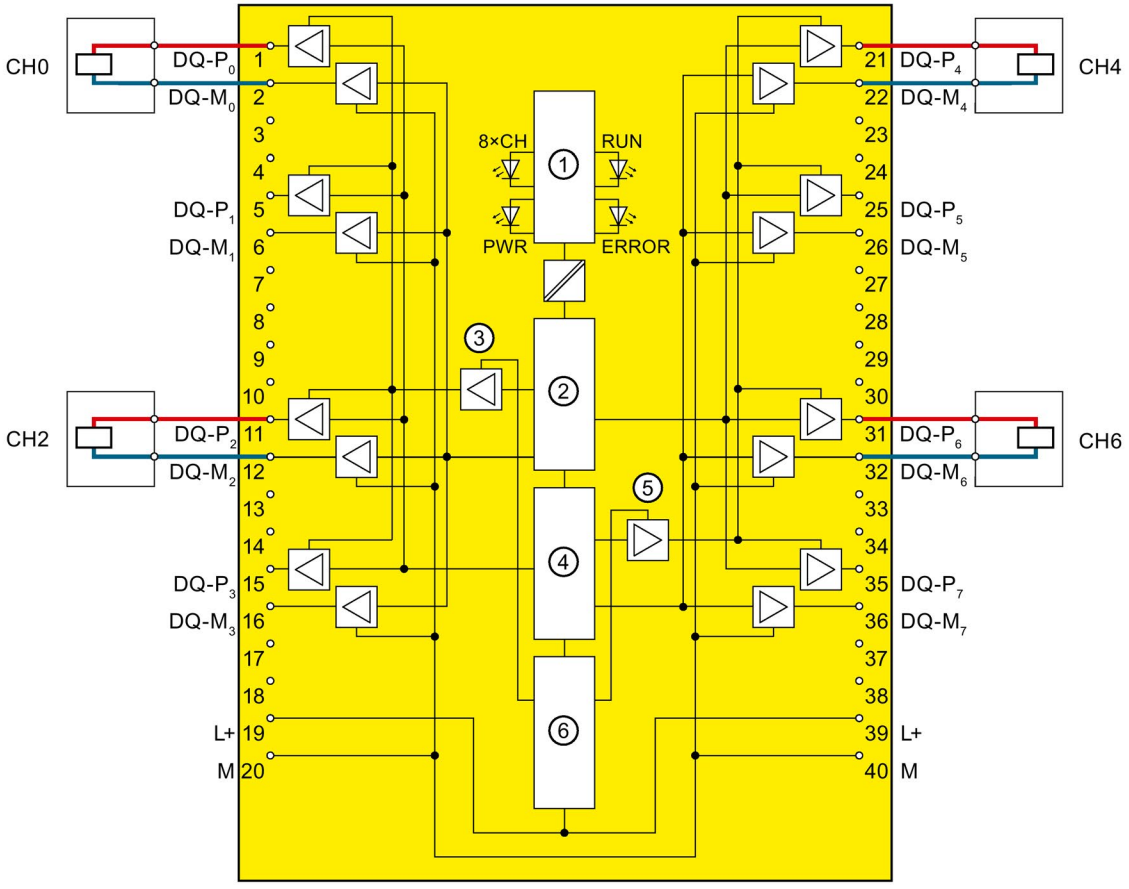

① Backplane bus interface
② Microcontroller 1
③ P1 switch for channel groups 0 to 3
④ Microcontroller 2
⑤ P1 switch for channel groups 4 to 7
⑥ Reverse polarity protection

Image 5-1 Wiring diagram for 1 relay to 1 F-DQ of the digital output module F-DQ 8x24VDC/2A PPM, PM-switching mode

⚠ WARNING
In order to achieve SIL3/Cat.4/PLe with this wiring, you must install a qualified actuator, for example, in accordance with IEC 60947.

Parameter assignment

Assign the following parameter for the corresponding channel group:

Table 5- 1 Parameter

Parameter	
Operating mode of the output	PM-switching mode

5.3 Application: Connection of loads per digital output to L+ and M, PM-switching mode

You can connect two relays using one fail-safe digital output. The following conditions should be kept in mind:

- Same reference potential
- The normally open contacts of the two relays must be connected in series.

This configuration achieves SIL3/Cat.4/PLe (process status readback required).

The figure below shows an example of the pin assignment of the fail-safe digital output module F-DQ 8x24VDC/2A PPM with connection of loads per digital output to L+ and M, PM-switching mode.

WARNING

To protect the F-module, always install an external fuse with the following properties for the load circuit: Circuit-breaker 24 V DC/16 A, tripping characteristic type B.

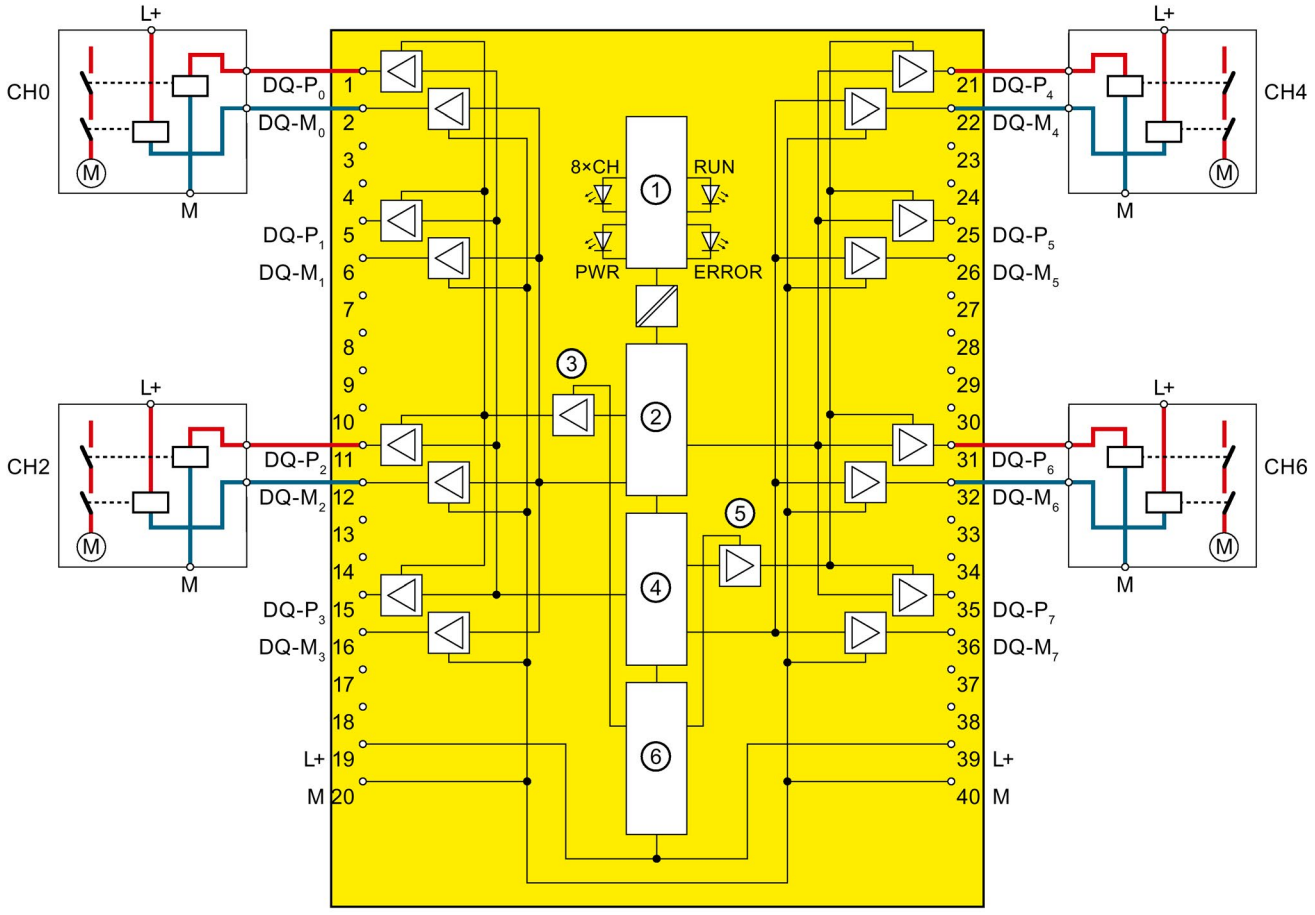

① Backplane bus interface
② Microcontroller 1
③ P1 switch for channel groups 0 to 3
④ Microcontroller 2
⑤ P1 switch for channel groups 4 to 7
⑥ Reverse polarity protection

Image 5-2 Wiring diagram for 2 relay to 1 F-DQ of the digital output module F-DQ 8x24VDC/2A PPM, PM-switching mode

⚠ WARNING

When two relays are connected to one digital output, as shown in the figure above, the "wire break" and "overload" faults are detected only at the P-switch of the output (not at the M-switch).

⚠ WARNING

With a cross circuit between P-switch and M-switch of the output, the module detects the fault and switches off the output. But the actuator is still supplied with power due to the external fault.

To avoid cross circuits between the P and M-switches of a fail-safe digital output, you should always wire the relay connection to the P and M-switches separately, in order to prevent any cross circuits. For example, as separately sheathed cables or in separate cable ducts.

Note

The digital output module F-DQ 8x24VDC/2A PPM performs a bit pattern test depending on the parameter assignment. For this, the module outputs up to 5 ms pulses depending on the parameter assignment. This test (switch-on test) is run with a time offset between the P-switch and M-switch to prevent the actuator from being activated. This pulse may cause the corresponding relay to operated, which may reduce its mission time.

We therefore recommend adhering to the wiring scheme described below. See section Application: Connecting 2 loads in parallel per digital output, PM-switching mode (Page 37).

Parameter assignment

Assign the following parameter for the corresponding channel group:

Table 5- 2 Parameter

Parameter	
Operating mode of the output	PM-switching mode

5.4 Application: Connecting 2 loads in parallel per digital output, PM-switching mode

To protect against cross-circuits between P-switch and M-switch in fail-safe digital outputs, we recommend the following wiring scheme. This circuit achieves SIL3/Cat.4/PLe.

The figure below shows an example of the pin assignment of the fail-safe digital output module F-DQ 8x24VDC/2A PPM with connection of two parallel loads per digital output, PM-switching mode.

⚠ WARNING

To protect the F-module, always install an external fuse with the following properties for the load circuit: Circuit-breaker 24 V DC/16 A, tripping characteristic type B.

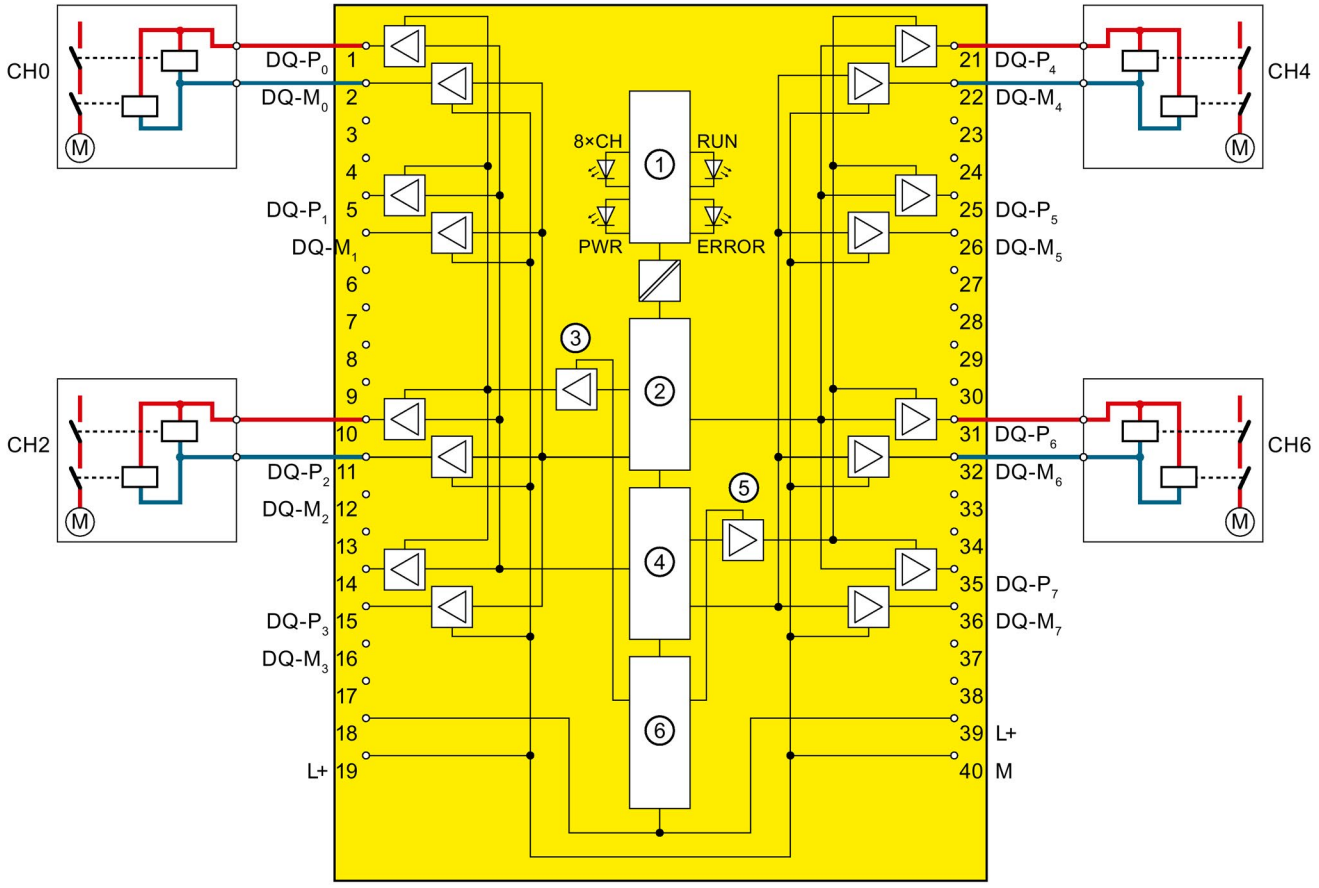

① Backplane bus interface
② Microcontroller 1
③ P1 switch for channel groups 0 to 3
④ Microcontroller 2
⑤ P1 switch for channel groups 4 to 7
⑥ Reverse polarity protection

Image 5-3 Wiring diagram for 2 relays in parallel to 1 F-DQ of the digital output module F-DQ 8x24VDC/2A PPM, PM-switching mode

Note

With a parallel connection of two relays on one digital output (as shown above) the "wire break" fault is only detected if the wire break disconnects both relays from P or M. This diagnostics is not safety-related.

Note

You can connect several actuators per output.

If several actuators are connected to an output, the diagnostics of each actuator affects the other ones.

This means:

- A wire break is only signaled when several actuators are affected.
- A single short-circuit affects multiple actuators.

Parameter assignment

Assign the following parameter for the corresponding channel group:

Table 5- 3 Parameter

Parameter	
Operating mode of the output	PM-switching mode

5.5 Application: Connecting a load per digital output, PP switching

You connect the load between the P-switch DQ-P_n and chassis ground in this application. This circuit achieves SIL3/Cat.4/PLe.

The figure below shows an example of the pin assignment of the fail-safe digital output module F-DQ 8x24VDC/2A PPM with connection of one load per digital output, PP switching.

⚠ WARNING

To protect the F-module, always install an external fuse with the following properties for the load circuit: Circuit-breaker 24 V DC/16 A, tripping characteristic type B.

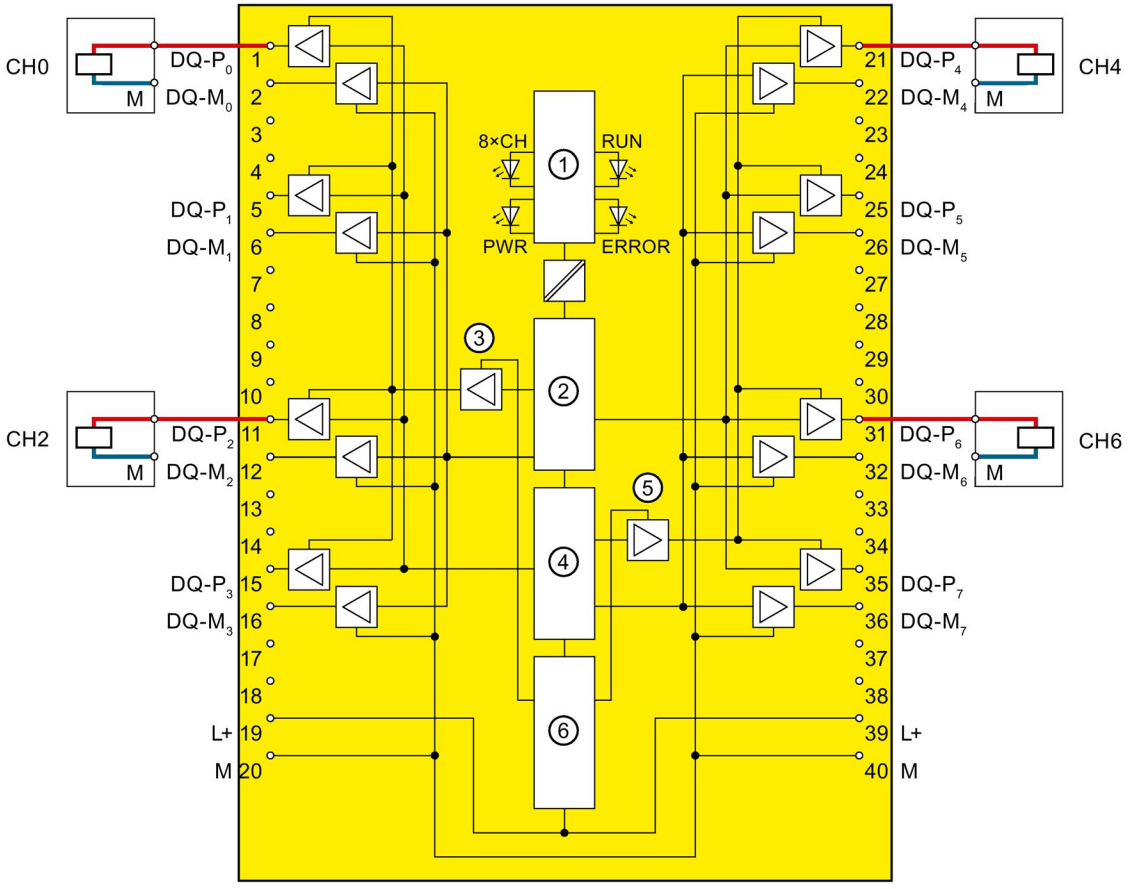

①	Backplane bus interface	④	Microcontroller 2
②	Microcontroller 1	⑤	P1 switch for channel groups 4 to 7
③	P1 switch for channel groups 0 to 3	⑥	Reverse polarity protection

Image 5-4 Wiring diagram for 1 relay to 1 F-DQ of the digital output module F-DQ 8x24VDC/2A PPM, PP switching

⚠ WARNING

In order to achieve SIL3/Cat.4/PLe with this wiring, you must install a qualified actuator, for example, in accordance with IEC 60947.

⚠ WARNING

In PP operation, the actuator can no longer be shut down if a cross circuit has developed between a positive potential (e.g. L+) and DQ. To prevent cross circuits between a positive potential (e.g. L+) and DQ, you must route the cables used to connect the actuators in a cross-circuit-proof manner (for example, as separate, sheathed cables or in separate cable ducts).

⚠ WARNING

In this application, you have to connect two ground terminals for safety reasons. Otherwise, the maximum residual current at signal "0" (specified in the technical specifications) cannot be maintained if a single ground line is interrupted.

⚠ WARNING

PP operation

In the event of an error at a non-passivated, non-activated output, a brief 1-signal can occur with a duration of 2x max. cycle time (T_{cycle}) + max. readback time dark test (Trb).

Parameter assignment

Assign the following parameter for the corresponding channel group:

Table 5- 4 Parameter

Parameter	
Operating mode of the output	PP switching

Interrupts/diagnostic messages

6

6.1 Status and error displays

LED displays

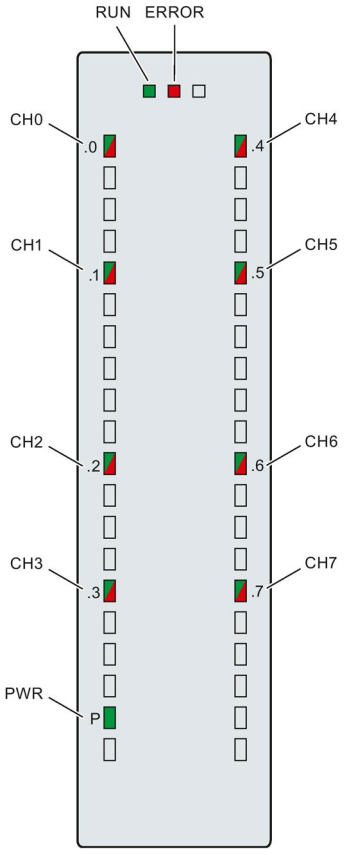

Image 6-1 LED displays of the F-DQ 8x24VDC/2A PPM

Meaning of the LED displays

The following tables explain the meaning of the status and error displays. Remedies for diagnostic alarms can be found in section Diagnostic alarms (Page 46).

WARNING
The RUN, ERROR LEDs and channel status/channel diagnostics LEDs of the outputs are not designed as safety-related LEDs and therefore may not be evaluated for safety-related activities.

RUN and ERROR LEDs

Table 6- 1 RUN/ERROR status and error displays

LED		Meaning	Remedy
RUN	ERROR		
Off	Off	Missing or insufficient voltage on the backplane bus	• Switch on the CPU and/or the system power supply modules. • Check whether the module is correctly plugged into the U-connector. • Check whether too many modules are plugged in.
Flashing	Off	Module starts up and flashes up to the valid parameter assignment.	---
On	Off	Module parameters are assigned and module addressed.	
Off	Flashing	Firmware is being updated.	
On	Flashing	Indicates diagnostic interrupts: • Module fault (for example, supply voltage too high) • Channel fault (for example, frequency too high). • PROFIsafe communication error Operation in S7-1500 F-CPUs: At least one channel is waiting for user acknowledgment.	Evaluate the diagnostics and eliminate or acknowledge the error. It may be necessary to remove and re-insert the module.
Flashing	Flashing	Hardware defective.	Replace the module.
Alternately flashing		• Operation in S7-1500 F-CPUs: The F-module expects user acknowledgment after a module error. • Operation in S7-300/400 F-CPUs: At least one channel is waiting for user acknowledgment.	Acknowledge the error (see manual SIMATIC Safety - Configuring and Programming (http://support.automation.siemens.com/WW/view/en/54110126)).

PWR LED

Table 6- 2 PWR status display

PWR	Meaning
Off	Supply voltage L+ missing
On	Supply voltage L+ available

CHx LED

Table 6- 3 Display channel status/channel diagnostics

Status CHx	Diagnostics CHx	Meaning
Off	Off	Process signal = 0 and no channel diagnostics*
On	Off	Process signal = 1 and no channel diagnostics
Off	On	Process signal = 0 and channel diagnostics
Alternately flashing		Channel waiting for user acknowledgment

* Operation in S7-300/400 F-CPUs only: If necessary, wait for user acknowledgment, if an additional channel is also waiting for user acknowledgment due to an error that occurred later.

CHx/ERROR LED with PROFIsafe address assignment

Table 6- 4 Channel status/channel diagnostics/ERROR display with PROFIsafe address assignment

Status CHx	Diagnostics CHx	ERROR	Meaning
Off	All on	Flashing	The PROFIsafe address does not match the configured PROFIsafe address
All are flashing	Off	Flashing	Identification of the F-module when assigning the PROFIsafe address

LED CHx/RUN/ERROR if supply voltage error occurs

Table 6- 5 Channel status/channel diagnostics/RUN/ERROR display if supply voltage error occurs

CHx status	Diagnostics CHx	RUN	ERROR	Meaning
Off	On	On	Flashing	Supply voltage too high or too low. • Operation in S7-1500 F-CPUs: Module is waiting for user acknowledgment. • Operation in S7-300/400 F-CPUs: Module is automatically reintegrated after the correction of the error.

6.2 Interrupts

Introduction

The F-DQ 8x24VDC/2A PPM fail-safe digital output module supports diagnostic interrupts.

Diagnostic interrupt

The F-module generates a diagnostic interrupt for each diagnostic alarm described in section Diagnostic alarms (Page 46).

The table below provides an overview of the diagnostic interrupts of the F-module . The diagnostic interrupts are assigned either to one channel or the entire F-module.

WARNING
Before acknowledging the short-circuit diagnostic alarm, remedy the respective fault and validate your safety function. Follow the fault remedying procedure described in section Diagnostic alarms (Page 46).

Table 6- 6 Diagnostic interrupts of the F-DQ 8x24VDC/2A PPM

Diagnostic interrupt	Fault code	Scope of diagnostic interrupt	Configurable
Overtemperature	5_D	F-module	No
Wire break	6_D		
Parameter error	16_D		
Supply voltage missing	17_D		
Safety event	25_D		
Mismatch of safety destination address (F_Dest_Add)	64_D		
Safety destination address not valid (F_Dest_Add)	65_D		
Safety source address not valid (F_Source_Add)	66_D		
Safety watchdog time value is 0 ms (F_WD_Time)	67_D		
Parameter F_SIL exceeds SIL from specific device application	68_D		
Parameter F_CRC_Length does not match the generated values	69_D		
Version of F-parameter set incorrectly	70_D		
CRC1 fault	71_D		
Save iParameter watchdog time exceeded	73_D		
Restore iParameter watchdog time exceeded	74_D		
Inconsistent iParameters (iParCRC error)	75_D		
F_Block_ID not supported	76_D		
Transmission error: Inconsistent data (CRC error)	77_D		
Transmission error: Timeout (watchdog time 1 or 2 expired)	78_D		
Module is defective	256_D		
Watchdog tripped	259_D		
Short-circuit to L+	261_D	Channel	Yes
Short-circuit to ground	262_D		
Invalid/inconsistent firmware present	283_D	F-module	No
Channel failure acknowledgment	779_D	Channel	
F-address memory not accessible	781_D	F-module	
Frequency too high	785_D	Channel	
Undertemperature	786_D	F-module	
Output defective	797_D	Channel	No
Read back failure	798_D	Channel	
Overload	800_D	Channel	
Supply voltage too high	801_D	F-module	
Supply voltage too low	802_D	F-module	

6.3 Diagnostic alarms

Diagnostic alarms

Module faults are indicated as diagnostics (module status).

Note

You can connect several actuators per output.

If several actuators are connected to an output, the diagnostics of each actuator affects the other ones.

This means:

- A wire break is only signaled when several actuators are affected.
- A single short-circuit affects multiple actuators.

Once the fault is eliminated, the F-module must be reintegrated in the safety program. For additional information on passivation and reintegration of F-I/O, refer to the SIMATIC Safety – Configuring and Programming (http://support.automation.siemens.com/WW/view/en/54110126) manual.

Table 6- 7 Diagnostic alarms of the F-DQ 8x24VDC/2A PPM

Diagnostic alarm	Fault code	Meaning	Remedy
Overtemperature	5_D	An excessively high temperature was measured in the F-module.	Operate the F-module within the specified temperature range (see Technical specifications (Page 51)) Once the temperature has been reduced and returns to the specified range, the F-module must be removed and inserted or the power switched OFF and ON.
Wire break	6_D	Possible causes: • There is an interrupted cable between the module and actuator. • The channel is not connected (open). • A short-circuit exists.	• Establish a cable connection. • Disable the wire break detection for the channel in the parameter assignment. • Eliminate the short-circuit.
Parameter error	16_D	Parameter errors include: • The F-module cannot use the parameters (unknown, invalid combination, etc.). • The F-module parameters have not been configured.	Correct the parameter assignment.

Diagnostic alarm	Fault code	Meaning	Remedy
Supply voltage missing	17_D	Missing or insufficient supply voltage L+	• Check supply voltage L+ at the front connector • Check the front connector
Safety event	25_D	For safety purposes, channel was switched off due to an error on another channel. Possible causes: • A short-circuit exists. • The capacitive load is too high (PP-switching operation).	• Correct the process wiring. • Increase the test times (dark, light, switch-on tests).
Mismatch of safety destination address (F_Dest_Add)	64_D	The firmware of the F-module has detected a different F-destination address.	• Check the parameter assignment of the PROFIsafe driver and the PROFIsafe address assigned to the F-module. • Assign the PROFIsafe address to the F-module (again).
Safety destination address not valid (F_Dest_Add)	65_D	The firmware of the F-module has detected an illegal different F-destination address.	
Safety source address not valid (F_Source_Add)	66_D	The firmware of the F-module has detected a different F-source address.	
Safety watchdog time value is 0 ms (F_WD_Time)	67_D	The firmware of the F-module has detected an invalid watchdog time.	
Parameter F_SIL exceeds SIL from specific device application	68_D	The firmware of the F-module has detected a discrepancy between the SIL setting of the communication and the application.	
Parameter F_CRC_Length does not match the generated values	69_D	The firmware of the F-module has detected a discrepancy in the CRC length.	
Version of F-parameter set incorrectly	70_D	The firmware of the F-module has detected an incorrect F_Par_Version or an invalid F_Block_ID.	
CRC1 fault	71_D	The firmware of the F-module has detected inconsistent F-parameters.	
Save iParameter watchdog time exceeded	73_D	iPar server does not respond to "save IPar" within 4.4 minutes.	Check the configuration/parameter assignment of the iPar server.
Restore iParameter watchdog time exceeded	74_D	iPar server does not respond to "restore IPar" within 4.4 minutes.	Check the configuration/parameter assignment of the iPar server.
Inconsistent iParameters (iParCRC error)	75_D	The firmware of the F-module has detected inconsistent iParameters.	Check the parameter assignment.
F_Block_ID not supported	76_D	The firmware of the F-module has detected an incorrect block ID.	Check the parameter assignment of the PROFIsafe driver.

Diagnostic alarm	Fault code	Meaning	Remedy
Transmission error: Inconsistent data (CRC error)	77_D	The firmware of the F-module has detected a CRC error. Possible causes: • The communication between the F-CPU and F-module is disturbed. • Impermissibly high electromagnetic interference is present. • An error occurred in the sign-of-life monitoring.	• Check the communication connection between the F-module and F-CPU. • Eliminate the electromagnetic interference.
Transmission error: Timeout (watchdog time 1 or 2 expired)	78_D	The firmware of the F-module has detected a timeout. Possible causes: • The F-monitoring time is set incorrectly. • A bus fault is present.	• Check the parameter assignment. • Ensure that communication is functioning correctly.
Module is defective	256_D	Possible causes: • Impermissibly high electromagnetic interference is present. • The F-module has detected an internal error and has reacted in a safety-related manner.	• Eliminate the interference. The module must then be pulled and plugged, or the power switched OFF and ON. • If the F-module cannot be put back into operation, consider replacing it.
Watchdog tripped	259_D	Possible causes: • Impermissibly high electromagnetic interference is present. • The F-module has detected an internal error and has reacted in a safety-related manner.	• Eliminate the interference. The module must then be pulled and plugged, or the power switched OFF and ON. • If the F-module cannot be put back into operation, consider replacing it.
Short-circuit to L+	261_D	Short-circuit to L+ can mean: • The output cable is short-circuited to L+. • The capacitive load between the channels is too high (for example, due to cable length) You must eliminate the error within 100 hours; otherwise, the F-module is permanently passivated and an acknowledgment is no longer possible.	• Correct the process wiring. • Increase the test times (dark, light, switch-on tests).

Diagnostic alarm	Fault code	Meaning	Remedy
Short-circuit to ground	262D	Short-circuit to ground can mean: • The output cable is short-circuited to ground. • The output signal is short-circuited to ground. • There is a short-circuit between two output channels. • The capacitive load is too high. You must eliminate the error within 100 hours; otherwise, the F-module is permanently passivated and an acknowledgment is no longer possible.	• Correct the process wiring. • Increase the test times (dark, light, switch-on tests).
Invalid/inconsistent firmware present	283D	The firmware is incomplete and/or firmware added to the F-module is incompatible. This leads to errors or functional limitations when operating the F-module.	• Perform a firmware update for all parts of the F-module and note any error messages. • Use only firmware versions released for this F-module.
Channel failure acknowledgment	779D	A channel fault was detected. Confirmation is required to enable the channel.	Confirm the channel fault.
F-address memory not accessible	781D	The F-source address and F-destination address stored in the coding element cannot be accessed.	Verify that the coding element is present or replace the coding element.
Frequency too high	785D	The maximum switching frequency of the F-module has been exceeded.	Reduce the switching frequency (see Technical specifications (Page 51))
Undertemperature	786D	The minimum permissible temperature limit has been violated.	Operate the F-module within the specified temperature range (see Technical specifications (Page 51))
Output defective	797D	The F-module has detected an internal error. You must eliminate the error within 100 hours; otherwise, the F-module is permanently passivated and an acknowledgment is no longer possible. Possible causes: • The capacitive load is too high. • Short-circuit to L+ or M • The F-module has detected an internal error and has reacted in a safety-related manner.	• Increase the test times (dark, light, switch-on tests). • Check the wiring. • Consider replacing the F-module.

Diagnostic alarm	Fault code	Meaning	Remedy
Read back failure	798D	The F-module has detected an internal error. You must eliminate the error within 100 hours; otherwise, the F-module is permanently passivated and an acknowledgment is no longer possible. Possible causes: • Impermissibly high electromagnetic interference is present. • The capacitive load is too high. • The F-module has detected an internal error and has reacted in a safety-related manner.	• Increase the test times (dark, light, switch-on tests). • If the error continues, consider replacing the F-module.
Overload	800D	The maximum permissible output current has been exceeded. The output stage has been switched off. You must eliminate the error within 100 hours; otherwise, the F-module is permanently passivated and an acknowledgment is no longer possible. Possible causes: • A short-circuit exists. • The connected load is too high.	• Check the process wiring. • Reduce the load or the load current.
Supply voltage too high	801D	The supply voltage is too high.	Check the supply voltage.
Supply voltage too low	802D	The supply voltage is too low.	Check the supply voltage.

Supply voltage outside the nominal range

If the supply voltage L+ is outside the specified value range, the ERROR LED flashes and the module is passivated.

When the voltage is then recovered (level must remain within the specified value for at least 1 minute, see Technical specifications (Page 51)), the ERROR LED stops flashing. The module remains passivated and waits for user acknowledgment.

Generally applicable information on diagnostics

Information on diagnostics that pertains to all fail-safe modules (for example, readout of diagnostics functions or passivation of channels) is available in the SIMATIC Safety – Configuring and Programming (http://support.automation.siemens.com/WW/view/en/54110126) manual.

Technical specifications

7

Technical specifications of F-DQ 8x24VDC/2A PPM

	6ES7526-2BF00-0AB0
General information	
Product type designation	F-DQ 8x24VDC/2A PPM
Firmware version	
• FW update possible	Yes
Product function	
I&M data	Yes; I&M0 to I&M3
Engineering with	
STEP 7 TIA Portal can be configured/integrated as of version	V13 SP1 with HSP0086
Operating mode	
DQ	Yes
Supply voltage	
Rated value (DC)	24 V
Low limit of permitted range (DC)	19.2 V
High limit of permitted range (DC)	28.8 V
Reverse polarity protection	Yes
Input current	
Current consumption (rated value)	110 mA; without load
Output voltage	
Rated value (DC)	24 V
Power	
Power consumption from the backplane bus	0.8 W
Power loss	
Power loss, typ.	11 W
Address range	
Address space per module	
Address space per module, max.	6 byte
Digital outputs	
Number of outputs	8
M switching	Yes
P switching	Yes
Short-circuit protection	Yes
Wire break detection	Yes
• Response threshold, typ.	8 mA
Overload protection	Yes
• Response threshold, typ.	2.9 A
Voltage induced on current interruption limited to	PM switching: -24 V + (-47 V), PP switching: -24 V

	6ES7526-2BF00-0AB0
Switching capacity of outputs	
With resistive load, max.	2 A
With lamp load, max.	10 W
Load resistance range	
Low limit	12 Ω
High limit	2000 Ω
Output voltage	
For "1" signal, min.	24 V; L+ (-0.5 V)
Output current	
For "1" signal, rated value	2 A
For "0" signal, residual current, max.	0.5 mA; PP switching or separate P and M-switch, PM-switching: max. 1 mA
Switching frequency	
With resistive load, max.	30 Hz
With inductive load, max.	0.1 Hz
With lamp load, max.	10 Hz
Total current of outputs	
Max. current per channel	2 A
Total current of the outputs (per module)	
Horizontal mounting position	
• Up to 40 °C, max.	16 A
• Up to 60 °C, max.	8 A
Vertical mounting position	
• Up to 40 °C, max.	8 A
Cable length	
shielded, max.	1000 m
unshielded, max.	500 m
Interrupts/diagnostics/status information	
Fail-safe values can be switched to	No
Interrupts	
Diagnostic interrupt	Yes
Diagnostic alarms	
Diagnostics	Yes
Monitoring of supply voltage	Yes
Wire break	Yes
Short-circuit	Yes
Group error	Yes
Diagnostics display LED	
RUN LED	Yes; green LED
ERROR LED	Yes; red LED
Monitoring of the supply voltage (PWR-LED)	Yes
Channel status display	Yes; green LED
For channel diagnostics	Yes; red LED
For module diagnostics	Yes; red LED

	6ES7526-2BF00-0AB0
Electrical isolation	
Electrical isolation, channels	
Between channels	No
Between channels and backplane bus	Yes
Insulation	
Insulation test voltage	707 VDC (type test)
Standards, approvals, certificates	
Maximum achievable safety class in safety mode	
Performance level according to EN ISO 13849-1:2008	PLe
SIL according to IEC 61508	SIL 3
Low demand mode: PFDavg according to SIL3	< 6.00E-05
High demand/continuous mode: PFH according to SIL3	< 2.00E-09 1/h
Environmental conditions	
Ambient temperature in operation	
Horizontal installation, min.	0 °C
Horizontal installation, max.	60 °C
Vertical installation, min.	0 °C
Vertical installation, max.	40 °C
Dimensions	
Width	35 mm
Height	147 mm
Depth	129 mm
Weights	
Weight, approx.	300 g

Note

To reach the maximum cable length, it may be necessary to increase the settings for maximum readback time switch on test or maximum read-back time dark test.

We also recommend a more detailed consideration of the boundary conditions, such as EMC, cables used, cable guide, etc.

Dimension drawing

See system manual S7-1500 Automation System (http://support.automation.siemens.com/WW/view/en/59191792).

Response times

A

Introduction

The next section shows the response times of the digital output module F-DQ 8×24VDC/2A PPM. The response times of digital output module F-DQ 8×24VDC/2A PPM are included in the calculation of the F-system response time.

Definition of response time for fail-safe digital outputs

The response time represents the interval between an incoming safety message frame from the backplane bus and the signal change at the digital output.

Times required for the calculation

- Max. cycle time: T_{cycle} = 5 ms
- Max. acknowledgment time (Device Acknowledgment Time): T_{DAT} = 10 ms

The maximum response time in the case of fault (One Fault Delay Time, OFDT) is equivalent to the maximum response time with no faults (Worst Case Delay Time, WCDT).

Assign the parameters for maximum readback time dark test (Maximum Readback Time, T_{rb}) and a maximum readback time switch-on test (Maximum Readback Time Switch-On Test, T_{rb_swon}) in STEP 7.

Maximum response time with no faults (Worst Case Delay Time, WCDT)

t <= 3 * cycle time + max (T_{rb}, T_{rb_swon})

Maximum response time with detection of a channel fault by readback

t <= 4 * cycle time + 2 * max (T_{rb}, T_{rb_swon})

Maximum response time with detection of a channel fault by bit pattern test

t <= 2 * cycle time + maximum test time

Maximum response time with detection of a wire break at "1" signal

t <= 3 * cycle time + 1000 ms (wire break detection) + max (T_{rb}, T_{rb_swon})

Maximum response time with detection of an overload at "1" signal

t <= 4 * cycle time + max (T_{rb}, T_{rb_swon})

Maximum response time with detection of an overload or wire break at "0" signal and light test activated.

t <= 2 * cycle time + maximum test time

Switching of loads

B

B.1 Connecting capacitive loads

If an F-DQ 8x24VDC/2A PPM digital output module is interconnected with loads that require little current and have capacitance, this can lead to detection of a short-circuit or overload. Reason: The capacitance cannot be sufficiently discharged or charged during the configured readback time of the bit pattern test.

The typical trends shown in the two figures below represent the correlation between load impedance and maximum switched load capacitance at a supply voltage of 24 V DC.

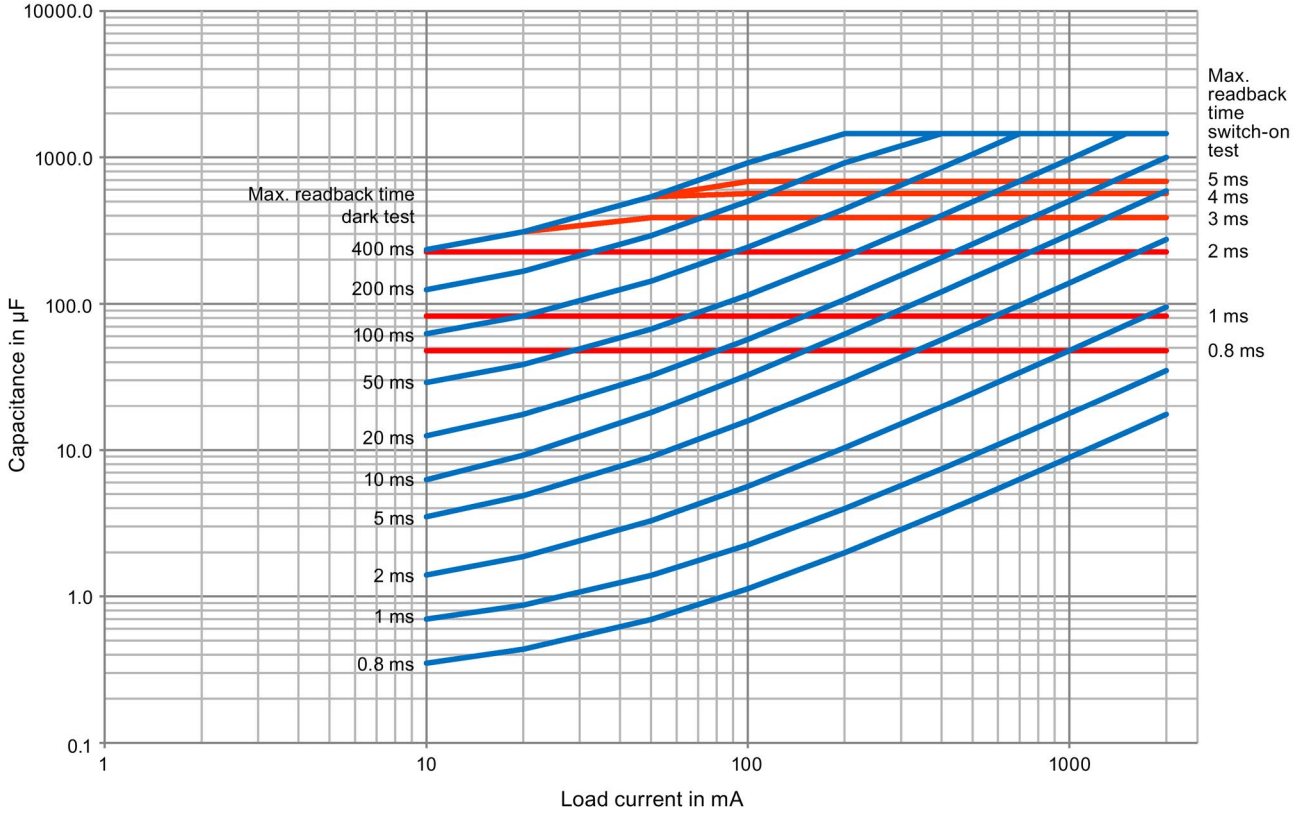

Image B-1 Switching of capacitive loads for the F-DQ 8x24VDC/2A PPM digital output module in PM-switching mode depending on the configured dark and light test times

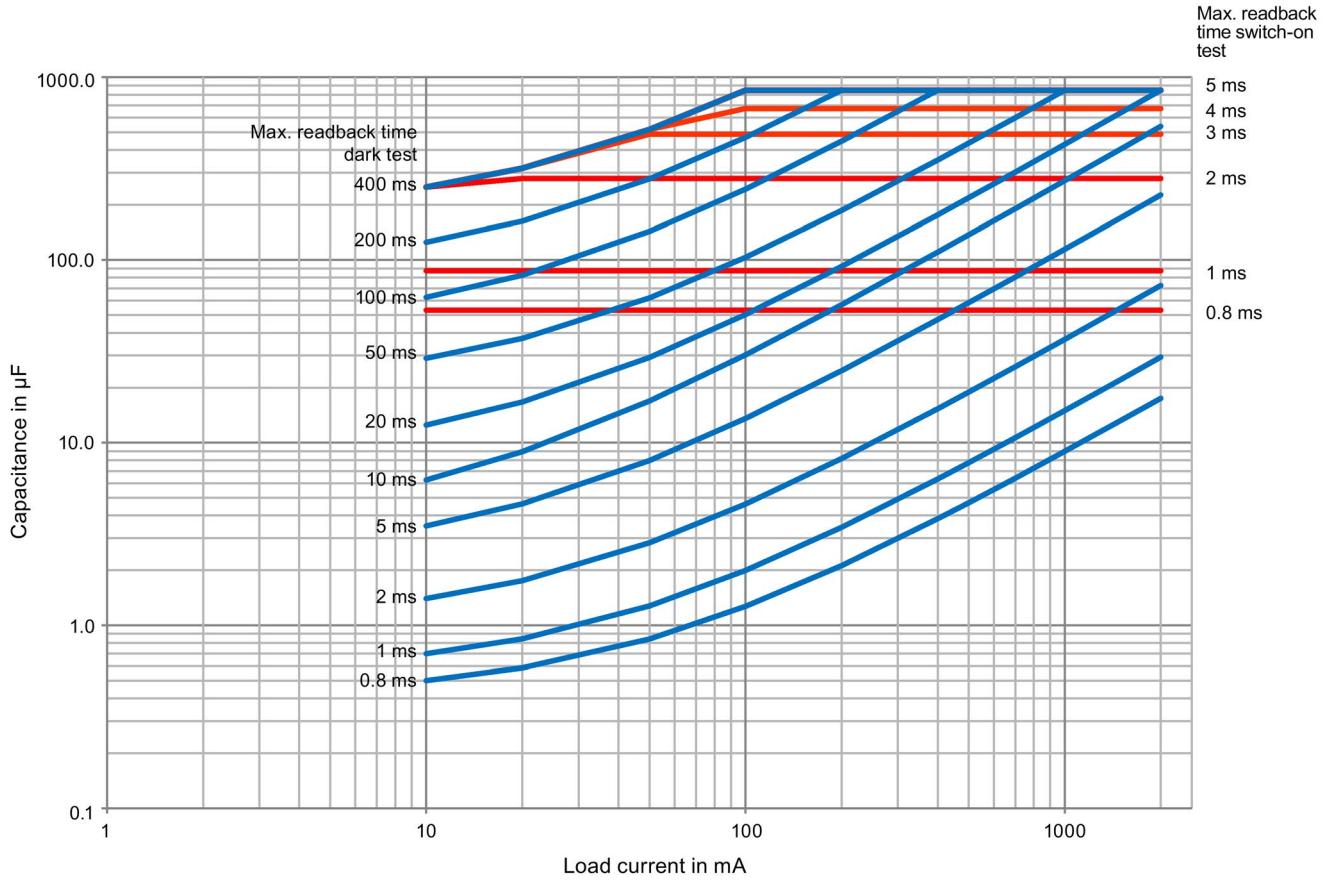

Image B-2 Switching of capacitive loads for the F-DQ 8x24VDC/2A PPM digital output module in PP-switching mode depending on the configured dark and light test times

The trends shown were plotted using a SIMATIC PS 307 10A power supply unit with a cable length of 25 m (cable cross-section of 1.5 mm^2) between the output of the F-DQ 8x24VDC/2A PPM output module and the load.

Note

The maximum readback time switch on test is only relevant if the light test is activated.

Remedy for detecting a short-circuit

1. Determine the load current and capacitance of the load.
2. Locate the operating point in the diagram above.
3. If the operating point is above the trend, select an actuator with higher current consumption so that the new operating point is below the curve.

Example

You have set a dark test time of 100 ms, a light test time of 2 ms and the PM-switching mode. You have set the load current to 20 mA and the capacity to 100 µF. The operating point is thus outside the range defined by the two trends (gray background).

Solution: Select an actuator with higher current consumption. In this example, 40 mA. Alternatively, you can configure the parameter "Max. readback time dark test" with 200 ms.

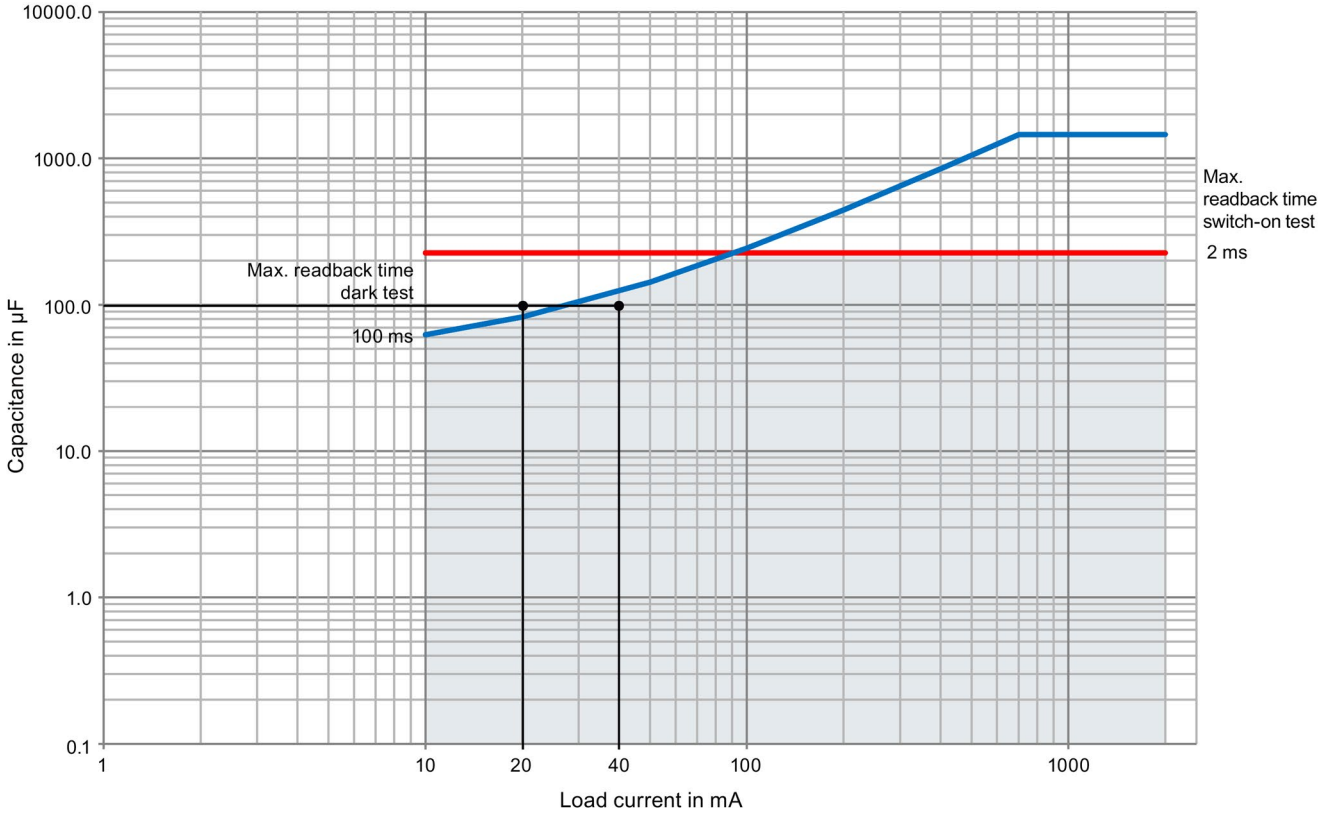

B.2 Switching of inductive loads

Switching of inductive loads

Use the switchgear for control and auxiliary circuits according to the utilization category DC-13 in accordance with IEC 60947-5-1:2014.

Open Source Software

C

For Resellers: In order to avoid infringements of the license conditions by the reseller or the buyer these instructions and license conditions and accompanying CD – if applicable - have to be forwarded to the buyers.

1) Siemens License Conditions

General License Conditions for Software Products for Automation and Drives

(2011-08-01)

1. Supply of Software to Licensee and Granting of Rights to use the Software

1.1 These General License Conditions shall exclusively apply to the delivery of Software for Automation and Drives to the Licensee. General terms and conditions of the Licensee shall apply only where expressly accepted in writing by us. The scope of delivery of the Software shall be determined by the congruent mutual written declarations of both parties. We shall grant the Licensee rights to use the software specified in the Confirmation of Order or, if the Licensee does not receive a Confirmation of Order, the software specified in the Certificate of License or that specified in the Software Product Sheet, if the Licensee is instead submitted a Software Product Sheet (hereinafter referred to as "SW"). The Certificate of License and the Software Product Sheet shall be collectively referred to as "CoL" hereinafter. The Licensee shall be submitted the CoL when the SW is supplied or in conjunction with the delivery bill. The way in which the SW is supplied is also derived directly from the Confirmation of Order or from the SW purchase order number contained in the Confirmation of Order, in conjunction with the associated order data of our catalog valid at the time of the Confirmation of Order (hereinafter collectively referred to as "Order Data"), or from the CoL. If the Licensee does not receive a data medium, it shall be authorized to copy the SW already available to it to the extent necessary to exercise the rights to use the SW granted to it. The aforesaid shall apply, mutatis mutandis, to electronic supply of the software (downloading). Where reference is made to the Order Data or the CoL in these General License Conditions, the reference to the CoL is of significance if the Licensee has not received a Confirmation of Order. In any case, the data contained in the Order Data is also contained in the CoL.

1.2 The Documentation relating to the SW (hereinafter referred to as "Documentation") shall be purchased separately, unless either the Order Data or CoL contains a stipulation stating that it belongs to the scope of delivery. If the Licensee is authorized to copy the SW in accordance with Clause 1.1, this shall also apply to the Documentation provided that it is included in the scope of delivery.

1.3 In the event that we submit a License Key to the Licensee, which unlocks the SW (hereinafter referred to as "License Key"), this License Key must also be installed.

1.4 The rights granted to the Licensee with respect to the SW are based on the License Type (see Section 2) and the Software Type (see Section 3). The license and Software Types are detailed in the Order Data or CoL. If the SW is supplied electronically or if copying rights are granted for it, the rights and duties specified in these General License Conditions shall apply to the legitimately generated copies.

1.5 If the Licensee is legitimately in possession of a previous SW version/release (hereinafter referred to as "Previous Version"), the Licensee shall be authorized to exercise the rights to use the SW granted to it either with respect to the SW or - if this is intended from a technical point of view - to the Previous Version, at its own discretion (downgrading). If the SW is an Upgrade or PowerPack in accordance with Section 4, Section 4 shall apply additionally.

1.6 If Previous Versions are listed in the Readme file of the SW under the category " parallel use", the Licensee has the right to exercise, alternatively to the user rights granted to him for the SW, the user rights for the listed Previous Versions in one (1) Instance. If the "Type of use" named in the Order Data or the CoL is: "Installation" or "User", the Licensee is entitled to the previously described right additionally to and at the same time as the Previous Versions listed in one Instance. An "Instance" in the context of these General License Conditions is either an instance in a physical operating system environment or an instance in a virtual operating system environment. The transferability of the user rights onto Previous Versions is only permissible in conjunction with the user rights for the SW in accordance with Clause 5.3.

1.7 In case the Licensee obtains only the data media but no license as per the Order Data or the CoL, any use of the SW by the Licensee is subject to the acquisition of a license according to Section 2. Up to the acquisition of the license, the Licensee is not entitled to supply the SW to third parties.

1.8 In case the SW contains Open Source Software or any similar software of a third party (hereinafter referred to as "OSS") the OSS is listed in the Readme_OSS-file of the SW. The Licensee is entitled to use the OSS in accordance with the respective license conditions of the OSS. The license conditions are provided on the same data carrier as the SW. The license conditions of the respective OSS shall prevail over these General License Conditions with respect to the OSS. If the license conditions of the OSS require the distribution of the source code of such OSS we shall provide such source code on request against payment of the shipping and handling charges.

1.9 The SW may be or contain licensed software other than OSS, i.e. software which has not been developed by us itself but which has been licensed to us by a third party (hereinafter referred to as the "Licensor"), e.g. Microsoft Licensing Inc. If the Licensee receives the terms and conditions stipulated by the relevant Licensor together with the SW in the Readme_OSS file in this case, such terms and conditions shall apply with respect to the Licensor's liability vis-à-vis the Licensee. Our own liability vis-à-vis the Licensee shall be governed in any case by these General License Conditions.

2. License Type

Depending on the License Type, the Licensee shall be granted the following rights to the SW:

2.1 Single License (One Off License, Copy License)
The term "One Off License" or "Copy License" which may be used in the Software Product Sheet corresponds to the term "Single License". The following regulation shall apply to the full scope of the One Off License / Copy License. The Licensee shall be granted the non-exclusive right, transferable in accordance with Clause 5.3 and valid for an unlimited period of time, to install the SW in one (1) Instance and to utilize the SW thus installed in the manner specified in the Order Data or CoL (see "Type of Use").

2.2 Floating License
The Licensee shall be granted the non-exclusive right, transferable in accordance with Clause 5.3 and valid for an unlimited period of time, to install the SW on any desired number of the Licensee's hardware devices. The number of objects (for example, users or devices) permitted to utilize the SW at the same time can be derived from the Order Data or CoL (see "Type of Use).

2.3 Rental License
The Licensee shall be granted the non-exclusive right, transferable in accordance with Clause 5.3 and limited in time as stipulated in the Order Data or CoL (see "Type of Use"), to install and use the SW in one (1) Instance. If the period of use is specified in hours, the usage decisive for the calculation of the time limit commences with the software start-up and finishes with its shut-down. If the period of usage is specified in days, weeks or months, the specified period, which commences in conjunction with the first SW start-up, shall apply independently of the actual time of usage. If the period of use is specified with a date, the right of use ends on this date – regardless of the actual period of use.

2.4 Rental Floating License
The Licensee shall be granted the non-exclusive right, transferable in accordance with Clause 5.3 and limited in time as stipulated in the Order Data or the CoL (s. " Type of use"), to install the SW on any desired number of the Licensee's hardware devices. The number of objects (for example, users or devices) permitted to utilize the SW at the same time can be derived from the Order Data or CoL (see "Type of Use) as well. If the period of use is specified in hours, the usage decisive for the calculation of the time limit commences with the software start-up and finishes with its shut-down. If the period of usage is specified in days, weeks or months, the specified period, which commences in conjunction with the first SW start-up, shall apply independently of the actual time of usage. If the period of use is specified with a date, the right of use ends on this date – regardless of the actual period of use.

2.5 Demo License
The Licensee shall be granted the non-exclusive right, transferable in accordance with Clause 5.3 and limited in time as stipulated in the Order Data or the CoL (s. " Type of use"), to install the SW in one (1) Instance and to use it for validation purposes. If the period of usage is specified in days, weeks or months, the specified period, which commences in conjunction with the first SW start-up, shall apply independently of the actual time of usage. If the period of use is specified with a date, the right of use ends on this date – regardless of the actual period of use.

2.6 Demo Floating License
The Licensee shall be granted the non-exclusive right, transferable in accordance with Clause 5.3 and limited in time as stipulated in the Order Data or the CoL (s. “ Type of use”), to install the SW on any desired number of the Licensee's hardware devices. The number of objects (for example, users or devices) permitted to utilize the SW at the same time can be derived from the Order Data or CoL (see "Type of Use) as well. If the period of usage is specified in days, weeks or months, the specified period, which commences in conjunction with the first SW start-up, shall apply independently of the actual time of usage. If the period of use is specified with a date, the right of use ends on this date – regardless of the actual period of use.

2.7 Trial License
The Licensee shall be granted the non-exclusive and non-transferable right to install the SW in one (1) Instance and to use it for validation purposes in the manner specified in the Order Data or CoL (see "Type of Use"). The period of usage is limited to 14 days and commences with the SW start-up, unless a different period of usage is specified in the Order Data or CoL.

3. Software Type
If the Software Type is not specified in the Order Data or CoL, the rights specified in Clause 3.2 (Runtime Software) shall apply to the SW.

3.1 Engineering Software (hereinafter referred to as "E-SW")
In the event that the Licensee uses E-SW to generate its own programs or data containing parts of the E-SW, the Licensee shall have the right, without having to pay any license fee, to copy and to use these parts of the E-SW as a part of its own programs or data, or to supply them to third parties for use. In the event that such parts are supplied to third parties for use, these parties shall be bound in writing to comply with stipulations corresponding to those in Clauses 5.1 and 5.2 with respect to the above parts of the E-SW.

3.2 Runtime Software (hereinafter referred to as "R-SW")
If the Licensee incorporates R-SW or any parts thereof into its own programs or data, it shall purchase a license with respect to the R-SW each time it installs or copies - depending on what is done first - its own programs or data containing R-SW or parts thereof, in accordance with the relevant intended Type of Use and on the basis of the Siemens catalog valid at that time. In the event that the Licensee supplies the specified programs or data to third parties for their use, these parties shall be bound in writing to adhere to stipulations corresponding to those in Section 5, with respect to the R-SW parts contained therein. The aforesaid shall not affect the Licensee's obligation to purchase a license for the R-SW if the R-SW original is copied. If the R-SW contains tools for parameterization/configuration and extended rights have been granted in this regard, this will be detailed in the readme file of the R-SW.

4. Upgrade and PowerPack
If it is apparent from the Order Data or CoL, e.g. by the addition "Upgrade" or “ PowerPack” after the SW product name, that the SW is an upgrade for another software item (hereinafter referred to as "Source License"), the rights originally granted to the Licensee to use the Source License end in conjunction with the upgrade measure. The rights of use in accordance with Clause 1.6 remain unaffected by this. However, the Licensee is entitled to undo the upgrading (downgrading) - if this is intended from a technical point of view - and to exercise the rights to use the SW granted to it with respect to the Source Version in accordance with Clause 1.5.

5. Further Rights and Duties of the Licensee
5.1 Unless a stipulation to the contrary relating to a specific number of copies is contained on the data medium or in the readme file of the SW, the Licensee may generate an appropriate number of copies of every item of SW which it is authorized to use in accordance with these General License Conditions, where such copies shall be used exclusively for data backup purposes. Furthermore the Licensee may only copy the SW if and insofar as it has been granted copying rights by us in writing.

5.2 The Licensee shall not be entitled to modify, decompile or reverse engineer the SW. Nor may it extract any individual parts unless this is permitted by mandatory copyright law. Furthermore, the Licensee shall not be entitled to remove any alphanumeric identifiers, trademarks or copyright notices from the SW or the data medium and, insofar as it is entitled to make copies of the SW, shall copy them without alteration. The aforementioned regulation shall apply accordingly to the Documentation supplied in accordance with Section 1.

5.3 The Licensee shall be entitled to completely transfer the right to use the SW granted to it to a third party, provided that it concludes a written agreement with the third party in conformance with all of the conditions contained in this Section 5 and on the proviso that it does not retain any copies of the SW. If the Licensee has received a License Key for the SW, this key shall be supplied to the third party together with the SW. Furthermore, the third party shall be submitted the CoL together with these General License Conditions. The Licensee shall submit the CoL received for the SW to us at any time, if requested.

5.4 If the SW is a PowerPack or an Upgrade, the Licensee shall keep the CoL of the Source License and submit it to us at any time, if requested, together with the CoL for the SW. In the event that the Licensee transfers its right to use the PowerPack SW or Upgrade SW in accordance with Clause 5.3, it shall also submit the CoL of the Source License to the third party.

5.5 If the Licensee receives a data medium which, in addition to the SW, contains further software products which are released for use, then it shall have the right to use these released software products exclusively for validation purposes, for a limited period of time and free of charge. The period of use shall be limited to 14 days, commencing with the first start-up of the relevant software program unless a different period is specified e.g. in the readme file of the relevant software product. These software products supplied exclusively for validation purposes shall be governed, mutatis mutandis, by the stipulations contained in these General License Conditions. The Licensee shall not be authorized to pass on these software products separately, i.e. without the SW, to a third party.

The conditions of the purchase contract apply if not otherwise stipulated hereafter for the Open Source Software.

2) License Conditions and Disclaimers for Open Source Software and other Licensed Software

In the product "S7-1500 F-SM - V1.0", Copyright Siemens AG, 2015 (hereinafter "Product"), the following Open Source Software is used either unchanged or in a form that we have modified, and additionally the other License Software noted below:

Liability for Open Source Software

Open Source Software is provided free of charge. We are liable for the Product including Open Source Software contained in accordance with the license conditions applicable to the Product. Any liability for use of Open Source Software beyond the program flow intended for the Product is explicitly excluded. Furthermore, any liability for defects resulting from modifications to the Open Source Software by you or third parties is excluded.

We do not provide any technical support for the Product if it has been modified.

Please note the following license conditions and copyright notices applicable to Open Source Software and other License Software:

Component	Open Source Software [Yes/No]	Acknow-ledgements	Copyright Information / File
Dinkumware C/C++ Library - 5.01	NO		LICENSE AND COPYRIGHT INFORMATION FOR COMPONENT DINKUMWARE C/C++ LIBRARY - 5.01
GNU GCC libgcc - 4.3.2	YES		LICENSE AND COPYRIGHT INFORMATION FOR COMPONENT GNU GCC LIBGCC - 4.3.2
GNU GCC libstdc++ / libsupc++ - 4.3.2	YES		LICENSE AND COPYRIGHT INFORMATION FOR COMPONENT GNU GCC LIBSTDC++ / LIBSUPC++ - 4.3.2

LICENSE CONDITIONS AND COPYRIGHT NOTICES

Commercial Software: Dinkumware C/C++ Library - 5.01
Enclosed you'll find the license conditions and copyright notices applicable for Commercial Software Dinkumware C/C++ Library - 5.01

License conditions:

© Copyright William E. Kempf 2001
Permission to use, copy, modify, distribute and sell this software and its documentation for any purpose is hereby granted without fee, provided that the above copyright notice appear in all copies and that both that copyright notice and this permission notice appear in supporting documentation. William E. Kempf makes no representations about the suitability of this software for any purpose. It is provided "as is" without express or implied warranty.

Copyright © 1994
Hewlett-Packard Company
Permission to use, copy, modify, distribute and sell this software and its documentation for any purpose is hereby granted without fee, provided that the above copyright notice appear in all copies and that both that copyright notice and this permission notice appear in supporting documentation. Hewlett-Packard Company makes no representations about the suitability of this software for any purpose. It is provided ``as is'' without express or implied warranty.

Copyrights:

Copyright 1992 - 2006 by p.j. plauger and jim brodie. all rights reserved.

Copyright 1992-2006 by p.j. plauger. all rights reserved.ip

Copyright 1992-2006 by p.j. plauger. portions derived from work copyright 1994 by hewlettpackard company. all rights reserved

Copyright 1992-2006 by dinkumware, ltd. all rights reserved

Copyright 1992-2006 by dinkumware, ltd. portions derived from work copyright 2001 by william e. kempf. all rights reserved

Copyright 1994 hewlettpackard company

Copyright 1994 by hewlettpackard company

Copyright william e. kempf 2001

Copyright 1989-2006 by p.j. plauger. all rights reserved

Copyright (c) by p.j. plauger. all rights reserved.

Copyright (c) by dinkumware, ltd. all rights reserved.

Copyright (c) unicode, inc. all rights reserved.

(c) Copyright william e. kempf 2001

Copyright (c) hewlettpackard company

Copyright (c) by p.j. plauger. all rights reserved.

Copyright 2006 by dinkumware, ltd.

Copyright (c) by p.j. plauger, licensed by dinkumware, ltd. all rights reserved.

the dinkum cec++ library reference is copyright (c) by p.j. plauger. this code is protected by copyright. all rights reserved.

the dinkum cc++ library reference is copyright (c) by p.j. plauger. this code is protected by copyright. all rights reserved.

dinkum compleat library, vc++ package (vc++ compilers only) the dinkum compleat library and the dinkum compleat library reference are copyright (c) by p.j. plauger. all rights reserved.

LICENSE CONDITIONS AND COPYRIGHT NOTICES

Open Source Software: GNU GCC libgcc 4.3.2
Enclosed you'll find the license conditions and copyright notices applicable for Open Source Software GNU GCC libgcc 4.3.2

License conditions:

This configure script is free software; the Free Software Foundation gives unlimited permission to copy, distribute and modify it.

This config.status script is free software; the Free Software Foundation gives unlimited permission to copy, distribute and modify it.

Copyrights:

Copyright (C) 2003 Free Software Foundation, Inc.

Copyright (C) 2005, 2006 Free Software Foundation

Copyright (C) 2007 Free Software Foundation, Inc.

Copyright 1997, 1998, 1999, 2000, 2001, 2002, 2003, 2004, 2005, 2006, 2007, # 2008 Free Software Foundation, Inc.

LICENSE CONDITIONS AND COPYRIGHT NOTICES

Open Source Software: GNU GCC libstdc++ / libsupc++ 4.3.2
Enclosed you'll find the license conditions and copyright notices applicable for Open Source Software GNU GCC libstdc++ / libsupc++ 4.3.2

License conditions:

Distributed under the Boost
Software License, Version 1.0. (See accompanying file
LICENSE_1_0.txt or copy at http:www.boost.org/LICENSE_1_0.txt)

Boost Software License - Version 1.0 - August 17th, 2003

Permission is hereby granted, free of charge, to any person or organization obtaining a copy of the software and accompanying documentation covered by this license (the "Software") to use, reproduce, display, distribute, execute, and transmit the Software, and to prepare derivative works of the Software, and to permit third-parties to whom the Software is furnished to do so, all subject to the following:

The copyright notices in the Software and this entire statement, including the above license grant, this restriction and the following disclaimer, must be included in all copies of the Software, in whole or in part, and all derivative works of the Software, unless such copies or derivative works are solely in the form of machine-executable object code generated by a source language processor.

THE SOFTWARE IS PROVIDED "AS IS", WITHOUT WARRANTY OF ANY KIND, EXPRESS OR
IMPLIED, INCLUDING BUT NOT LIMITED TO THE WARRANTIES OF MERCHANTABILITY,
FITNESS FOR A PARTICULAR PURPOSE, TITLE AND NON-INFRINGEMENT. IN NO EVENT
SHALL THE COPYRIGHT HOLDERS OR ANYONE DISTRIBUTING THE SOFTWARE BE LIABLE
FOR ANY DAMAGES OR OTHER LIABILITY, WHETHER IN CONTRACT, TORT OR OTHERWISE,
ARISING FROM, OUT OF OR IN CONNECTION WITH THE SOFTWARE OR THE USE OR OTHER
DEALINGS IN THE SOFTWARE.

This is free software; see the source for copying conditions. There is NO warranty; not even for MERCHANTABILITY or FITNESS FOR A PARTICULAR PURPOSE.

This file is free software; the Free Software Foundation
gives unlimited permission to copy and/or distribute it,
with or without modifications, as long as this notice is preserved.

Free Software Foundation, Inc.
This file is free software; the Free Software Foundation
gives unlimited permission to copy and/or distribute it,
with or without modifications, as long as this notice is preserved.
This program is distributed in the hope that it will be useful,
but WITHOUT ANY WARRANTY, to the extent permitted by law; without
even the implied warranty of MERCHANTABILITY or FITNESS FOR A
PARTICULAR PURPOSE.

Permission to copy, use, modify, sell and distribute this software
is granted provided this copyright notice appears in all copies.
This software is provided "as is" without express or implied
warranty, and with no claim as to its suitability for any purpose.

This Makefile.in is free software; the Free Software Foundation
gives unlimited permission to copy and/or distribute it,
with or without modifications, as long as this notice is preserved.
This program is distributed in the hope that it will be useful,
but WITHOUT ANY WARRANTY, to the extent permitted by law; without
even the implied warranty of MERCHANTABILITY or FITNESS FOR A
PARTICULAR PURPOSE.

This configure script is free software; the Free Software Foundation
gives unlimited permission to copy, distribute and modify it.

Permission to use, copy, modify, distribute and sell this software
and its documentation for any purpose is hereby granted without fee,
provided that the above copyright notice appear in all copies and
that both that copyright notice and this permission notice appear
in supporting documentation. Silicon Graphics makes no
representations about the suitability of this software for any
purpose. It is provided "as is" without express or implied warranty.

Permission to use, copy, modify, sell, and distribute this
software is hereby granted without fee, provided that the above
copyright notice appears in all copies, and that both that
copyright notice and this permission notice appear in
supporting documentation.
None of the above authors, nor IBM Haifa Research
Laboratories, Red Hat, or both, make any representation about
the suitability of this software for any purpose. It is
provided "as is" without express or implied warranty.

Permission to use, copy, modify, sell, and distribute this software
is hereby granted without fee, provided that the above copyright
notice appears in all copies, and that both that copyright notice and
this permission notice appear in supporting documentation. None of
the above authors, nor IBM Haifa Research Laboratories, make any
representation about the suitability of this software for any
purpose. It is provided "as is" without express or implied warranty.

Permission to use, copy, modify, distribute and sell this software
and its documentation for any purpose is hereby granted without fee,
provided that the above copyright notice appear in all copies and
that both that copyright notice and this permission notice appear
in supporting documentation. Hewlett-Packard Company makes no
representations about the suitability of this software for any
purpose. It is provided "as is" without express or implied warranty.

Verbatim copying and distribution of this entire article are
permitted worldwide, without royalty, in any medium, provided this
notice is preserved.</para>
<para>Report any problems or suggestions to
<email>webmaster@fsf.org</email>.</para>
</appendix>

Copyrights:

(C) Copyright Jeremy Siek 2000.

Copyright © 1994 Hewlett-Packard Company

Copyright © 1998 by Information Technology Industry Council.

Copyright © 2007 Free Software Foundation, Inc.

Copyright (C) Microsoft Corporation 1984-2002. All rights reserved.

Copyright (C) 1994, 1995, 1996, 1997, 1998, 1999, 2000, 2001 // Free Software Foundation

Copyright (C) 1994, 1995, 1996, 1997, 1998, 1999, 2000, 2001, 2002 // Free Software Foundation

Copyright (C) 1994, 1995, 1996, 1997, 1998, 1999, 2000, 2001, 2002, # 2003, 2004, 2005 Free Software Foundation, Inc.

Copyright (C) 1994, 1995, 1996, 1997, 1998, 1999, 2000, 2001, 2002, // 2003, 2004, 2005, 2006, 2007 // Free Software Foundation

Copyright (C) 1994, 1995, 1996, 1997, 1998, 1999, 2000, 2001, 2002, // 2003, 2004, 2005, 2006, 2007 Free Software Foundation, Inc.

Copyright (C) 1994, 1995, 1996, 1998, 1999, 2000, 2001, 2004 // Free Software Foundation

Copyright (C) 1994, 1996, 1997, 1998, 1999, 2000, 2001, 2002 // Free Software Foundation

Copyright (C) 1994, 1996, 1997, 1998, 1999, 2000, 2001, 2002, 2007 // Free Software Foundation

Copyright (C) 1994, 1999, 2000, 2003 Free Software Foundation, Inc.

Copyright (C) 1994, 1999, 2000, 2003, 2005 Free Software Foundation, Inc.

Copyright (C) 1994, 1999, 2001, 2002, 2003 Free Software Foundation, Inc.

Copyright (C) 1994, 1999, 2001, 2003 Free Software Foundation, Inc.

Copyright (C) 1995, 1996, 1997, 1998, 1999, 2000, 2001, 2002, 2003, // 2004, 2005, 2006, 2007 // Free Software Foundation

Copyright (C) 1996, 1997, 1998, 1999, 2000, 2001, 2002, 2003, 2004, # 2005 Free Software Foundation, Inc.

Copyright (C) 1996, 1997, 1998, 1999, 2000, 2001, 2002, 2003, 2004, // 2005, 2006, 2007 // Free Software Foundation

Copyright (C) 1996, 1997, 1998, 1999, 2000, 2001, 2002, 2003, 2004, 2005 # Free Software Foundation, Inc.

Copyright (C) 1996, 1997, 2000, 2001, 2003, 2005 # Free Software Foundation, Inc.

Copyright (C) 1996, 1998, 2000, 2001, 2002, 2003, 2004, 2005 # Free Software Foundation, Inc.

Copyright (C) 1997, 1998, 1999 Free Software Foundation, Inc.

Copyright (C) 1997, 1998, 1999, 2000, 2001, 2002 // Free Software Foundation, Inc.

Copyright (C) 1997, 1998, 1999, 2000, 2001, 2002 // Free Software Foundation, Inc.

Copyright (C) 1997, 1998, 1999, 2000, 2001, 2002 // Free Software Foundation, Inc.

Copyright (C) 1997, 1998, 1999, 2000, 2001, 2002, 2003 ## Free Software Foundation, Inc.

Copyright (C) 1997, 1998, 1999, 2000, 2001, 2002, 2003 // Free Software Foundation, Inc.

Copyright (C) 1997, 1998, 1999, 2000, 2001, 2002, 2003, 2004 // Free Software Foundation, Inc.
Copyright (C) 1997, 1998, 1999, 2000, 2001, 2002, 2003, 2004, // 2005, 2006, 2007 // Free Software Foundation, Inc.

Copyright (C) 1997, 1998, 1999, 2000, 2001, 2002, 2003, 2004, // 2005, 2006, 2007 Free Software Foundation, Inc.

Copyright (C) 1997, 1998, 1999, 2000, 2001, 2002, 2003, 2004, 2005 // 2006, 2007 // Free Software Foundation, Inc.

Copyright (C) 1997, 1998, 1999, 2000, 2001, 2002, 2003, 2004, 2005 // Free Software Foundation, Inc.

Copyright (C) 1997, 1998, 1999, 2000, 2001, 2002, 2003, 2004, 2005, // 2006, 2007 // Free Software Foundation, Inc.

Copyright (C) 1997, 1998, 1999, 2000, 2001, 2002, 2003, 2004, 2005, // 2006, 2007 Free Software Foundation, Inc.

Copyright (C) 1997, 1998, 1999, 2000, 2001, 2002, 2003, 2004, 2005, // 2006, 2007, 2008 // Free Software Foundation, Inc.

Copyright (C) 1997, 1998, 1999, 2000, 2001, 2002, 2003, 2004, 2005, // 2006, 2007, 2008 Free Software Foundation, Inc.

Copyright (C) 1997, 1998, 1999, 2000, 2001, 2002, 2003, 2004, 2005, // 2006, 2008 Free Software Foundation, Inc.

Copyright (C) 1997, 1998, 1999, 2000, 2001, 2002, 2003, 2004, 2005, 2006 // Free Software Foundation, Inc.

Copyright (C) 1997, 1998, 1999, 2000, 2001, 2002, 2003, 2004, 2005, 2006, // 2007 // Free Software Foundation, Inc.

Copyright (C) 1997, 1998, 1999, 2000, 2001, 2002, 2003, 2004, 2005, 2007 // Free Software Foundation, Inc.

Copyright (C) 1997, 1998, 1999, 2000, 2001, 2002, 2003, 2005 ## Free Software Foundation, Inc.

Copyright (C) 1997, 1998, 1999, 2000, 2001, 2002, 2003, 2005 // Free Software Foundation, Inc.

Copyright (C) 1997, 1998, 1999, 2000, 2001, 2002, 2003, 2008 ## Free Software Foundation, Inc.

Copyright (C) 1997, 1998, 1999, 2000, 2001, 2002, 2004 // Free Software Foundation

Copyright (C) 1997, 1998, 1999, 2000, 2001, 2002, 2004, 2005 // Free Software Foundation, Inc.

Copyright (C) 1997, 1998, 1999, 2000, 2001, 2002, 2004, 2005, // 2006, 2007 // Free Software Foundation, Inc.

Copyright (C) 1997, 1998, 1999, 2000, 2001, 2002, 2004, 2005, 2006 // Free Software Foundation, Inc.

Copyright (C) 1997, 1998, 1999, 2000, 2001, 2002, 2004, 2006 // Free Software Foundation, Inc.

Copyright (C) 1997, 1998, 1999, 2000, 2001, 2002, 2005 // Free Software Foundation, Inc.

Copyright (C) 1997, 1998, 1999, 2000, 2001, 2002, 2005, 2006 // Free Software Foundation, Inc.

Copyright (C) 1997, 1998, 1999, 2000, 2001, 2004 Free Software Foundation

Copyright (C) 1997, 1998, 1999, 2000, 2001, 2004, 2005 // Free Software Foundation, Inc.

Copyright (C) 1997, 1998, 1999, 2000, 2001, 2004, 2005, 2006 // Free Software Foundation, Inc.

Copyright (C) 1997, 1998, 1999, 2000, 2002, 2003, 2004 // Free Software Foundation, Inc.

Copyright (C) 1997, 1998, 1999, 2000, 2002, 2003, 2004, 2006 // Free Software Foundation, Inc.

Copyright (C) 1997, 1998, 1999, 2000, 2002, 2007 // Free Software Foundation, Inc.

Copyright (C) 1997, 1998, 1999, 2000, 2003 Free Software Foundation, Inc.

Copyright (C) 1997, 1998, 1999, 2000, 2004 Free Software Foundation

Copyright (C) 1997, 1998, 1999, 2000, 2004, 2007 Free Software Foundation

Copyright (C) 1997, 1998, 1999, 2001, 2002 // Free Software Foundation, Inc.

Copyright (C) 1997, 1998, 1999, 2001, 2002 Free Software Foundation, Inc.

Copyright (C) 1997, 1998, 1999, 2001, 2002, 2005 // Free Software Foundation, Inc.

Copyright (C) 1997, 1998, 1999, 2002 Free Software Foundation, Inc.

Copyright (C) 1997, 1998, 1999, 2002, 2004 // Free Software Foundation, Inc.

Copyright (C) 1997, 1998, 1999, 2003 Free Software Foundation, Inc.

Copyright (C) 1997, 1998, 1999, 2003, 2005 Free Software Foundation, Inc.

Copyright (C) 1997, 1998, 1999, 2007 Free Software Foundation, Inc.

Copyright (C) 1997, 1999, 2000, 2001, 2003, 2005 # Free Software Foundation, Inc.

Copyright (C) 1997, 1999, 2000, 2001, 2004 Free Software Foundation, Inc.

Copyright (C) 1997, 1999, 2001, 2002, 2005 Free Software Foundation, Inc.

Copyright (C) 1997, 2000, 2001, 2003, 2004, 2005 # Free Software Foundation, Inc.

Copyright (C) 1997-1999 Free Software Foundation, Inc.

Copyright (C) 1997-1999, 2000, 2001 Free Software Foundation, Inc.

Copyright (C) 1997-1999, 2000, 2002 Free Software Foundation, Inc.

Copyright (C) 1997-1999, 2001 Free Software Foundation, Inc.

Copyright (C) 1998, 1999 Greg Colvin and Beman Dawes.

Copyright (C) 1998, 1999, 2000, 2001, 2002, 2003, 2004, 2005, // 2006, 2007 // Free Software Foundation, Inc.

Copyright (C) 1998, 1999, 2003 Free Software Foundation, Inc.

Copyright (C) 1998, 1999, 2003, 2004 Free Software Foundation, Inc.

Copyright (C) 1999 Free Software Foundation, Inc.

Copyright (C) 1999, 2000 Free Software Foundation, Inc.

Copyright (C) 1999, 2000, 2001, 2002, 2003 Free Software Foundation

Copyright (C) 1999, 2000, 2001, 2002, 2003 Free Software Foundation, Inc.

Copyright (C) 1999, 2000, 2001, 2002, 2003, 2004 // Free Software Foundation, Inc.

Copyright (C) 1999, 2000, 2001, 2002, 2003, 2004 Free Software Foundation

Copyright (C) 1999, 2000, 2001, 2002, 2003, 2004, 2005 // Free Software Foundation, Inc.

Copyright (C) 1999, 2000, 2001, 2002, 2003, 2004, 2005, 2006 // Free Software Foundation

Copyright (C) 1999, 2000, 2001, 2002, 2003, 2004, 2005, 2006 // Free Software Foundation, Inc.

Copyright (C) 1999, 2000, 2001, 2002, 2003, 2004, 2005, 2006, 2007 // Free Software Foundation, Inc.

Copyright (C) 1999, 2000, 2001, 2002, 2003, 2004, 2005, 2006, 2007, 2008 // Free Software Foundation, Inc.

Copyright (C) 1999, 2000, 2001, 2002, 2003, 2005 // Free Software Foundation, Inc.

Copyright (C) 1999, 2000, 2001, 2002, 2003, 2005 Free Software Foundation

Copyright (C) 1999, 2000, 2001, 2002, 2003, 2006 // Free Software Foundation, Inc.

Copyright (C) 1999, 2000, 2001, 2002, 2004, 2005 // Free Software Foundation, Inc.

Copyright (C) 1999, 2000, 2001, 2003 Free Software Foundation

Copyright (C) 1999, 2000, 2001, 2003, 2004, 2005 // Free Software Foundation, Inc.

Copyright (C) 1999, 2000, 2001, 2004, 2005 Free Software Foundation, Inc.

Copyright (C) 1999, 2000, 2002, 2003 Free Software Foundation

Copyright (C) 1999, 2000, 2002, 2003 Free Software Foundation, Inc.

Copyright (C) 1999, 2000, 2002, 2003, 2004, 2005 // Free Software Foundation, Inc.

Copyright (C) 1999, 2000, 2002, 2003, 2005 Free Software Foundation

Copyright (C) 1999, 2000, 2003 Free Software Foundation

Copyright (C) 1999, 2000, 2003 Free Software Foundation, Inc.

Copyright (C) 1999, 2001, 2002, 2003, 2004 Free Software Foundation

Copyright (C) 1999, 2001, 2002, 2003, 2004, 2005 // Free Software Foundation, Inc.

Copyright (C) 1999, 2001, 2002, 2003, 2004, 2005 Free Software Foundation

Copyright (C) 1999, 2001, 2002, 2003, 2004, 2005, 2006 // Free Software Foundation, Inc.

Copyright (C) 1999, 2001, 2002, 2005, 2006 Free Software Foundation, Inc.

Copyright (C) 1999, 2001, 2003 Free Software Foundation

Copyright (C) 1999, 2001, 2003 Free Software Foundation, Inc.

Copyright (C) 1999, 2001, 2003, 2004 Free Software Foundation

Copyright (C) 1999, 2001, 2003, 2007 Free Software Foundation, Inc.

Copyright (C) 1999, 2001, 2004, 2005 Free Software Foundation, Inc.

Copyright (C) 1999, 2002 Free Software Foundation, Inc.

Copyright (C) 1999, 2002, 2003 Free Software Foundation, Inc.

Copyright (C) 1999, 2002, 2003, 2004 Free Software Foundation, Inc.

Copyright (C) 1999, 2002, 2003, 2004, 2005 // Free Software Foundation, Inc.

Copyright (C) 1999, 2002, 2003, 2004, 2005 Free Software Foundation, Inc.

Copyright (C) 1999, 2002, 2003, 2005 Free Software Foundation, Inc.

Copyright (C) 1999, 2002, 2004, 2005 Free Software Foundation, Inc.

Copyright (C) 1999, 2003 Free Software Foundation

Copyright (C) 1999, 2003 Free Software Foundation, Inc.

Copyright (C) 1999, 2003, 2004, 2005 Free Software Foundation, Inc.

Copyright (C) 1999, 2003, 2005 Free Software Foundation

Copyright (C) 1999, 2003, 2005 Free Software Foundation, Inc.

Copyright (C) 1999, 2004, 2005 Free Software Foundation, Inc.

Copyright (C) 1999, 2007 Free Software Foundation, Inc.

Copyright (C) 1999-2001, 2002, 2003 Free Software Foundation, Inc.

Copyright (C) 1999-2001, 2002, 2003, 2004, 2005 // Free Software Foundation, Inc.

Copyright (C) 2000 Free Software Foundation, Inc.

Copyright (C) 2000, 1999 Free Software Foundation, Inc.

Copyright (C) 2000, 2001 Free Software Foundation

Copyright (C) 2000, 2001, 2002 Free Software Foundation,

Copyright (C) 2000, 2001, 2002 Free Software Foundation, <abbrev>Inc.</abbrev> 51 Franklin <abbrev>St</abbrev>, Fifth Floor, Boston, <abbrev>MA</abbrev> 02110-1301

Copyright (C) 2000, 2001, 2002 Free Software Foundation, Inc.

Copyright (C) 2000, 2001, 2002, 2003 Free Software Foundation

Copyright (C) 2000, 2001, 2002, 2003 Free Software Foundation, Inc.

Copyright (C) 2000, 2001, 2002, 2003, 2004 Free Software Foundation

Copyright (C) 2000, 2001, 2002, 2003, 2004, 2005 // Free Software Foundation, Inc.

Copyright (C) 2000, 2001, 2002, 2003, 2004, 2005, 2006 // Free Software Foundation

Copyright (C) 2000, 2001, 2002, 2003, 2004, 2005, 2006 // Free Software Foundation, Inc.

Copyright (C) 2000, 2001, 2002, 2003, 2004, 2005, 2006, 2007 // Free Software Foundation, Inc.

Copyright (C) 2000, 2001, 2002, 2003, 2004, 2005, 2006, 2007 // Free Software Foundation

Copyright (C) 2000, 2001, 2002, 2003, 2004, 2005, 2006, 2007 // Free Software Foundation, Inc.

Copyright (C) 2000, 2001, 2002, 2003, 2004, 2005, 2006, 2007, 2008 // Free Software Foundation, Inc.

Copyright (C) 2000, 2001, 2002, 2003, 2004, 2005, 2007 ## Free Software Foundation, Inc.

Copyright (C) 2000, 2001, 2002, 2003, 2004, 2006, 2007 // Free Software Foundation, Inc.

Copyright (C) 2000, 2001, 2002, 2003, 2005 Free Software Foundation

Copyright (C) 2000, 2001, 2002, 2003, 2005 Free Software Foundation, Inc.

Copyright (C) 2000, 2001, 2002, 2003, 2006 Free Software Foundation, Inc.

Copyright (C) 2000, 2001, 2002, 2003, 2007 Free Software Foundation

Copyright (C) 2000, 2001, 2003 Free Software Foundation, Inc.

Copyright (C) 2000, 2001, 2003, 2004 Free Software Foundation, Inc.

Copyright (C) 2000, 2001, 2003, 2004, 2005 Free Software Foundation, Inc.

Copyright (C) 2000, 2001, 2003, 2004, 2005, 2006 // Free Software Foundation, Inc.

Copyright (C) 2000, 2001, 2003, 2005 Free Software Foundation, Inc.

Copyright (C) 2000, 2001, 2004, 2005 Free Software Foundation, Inc.

Copyright (C) 2000, 2001, 2005, 2006 Free Software Foundation, Inc.

Copyright (C) 2000, 2002 Free Software Foundation, Inc.

Copyright (C) 2000, 2002, 2003 Free Software Foundation

Copyright (C) 2000, 2002, 2003 Free Software Foundation, Inc.

Copyright (C) 2000, 2002, 2003, 2004 Free Software Foundation

Copyright (C) 2000, 2002, 2003, 2004, 2006, 2007 Free Software Foundation, Inc.

Copyright (C) 2000, 2002, 2003, 2005 Free Software Foundation

Copyright (C) 2000, 2002, 2004, 2005 Free Software Foundation, Inc.

Copyright (C) 2000, 2002, 2005 Free Software Foundation, Inc.

Copyright (C) 2000, 2002, 2005, 2008 Free Software Foundation, Inc.

Copyright (C) 2000, 2002, 2006 Free Software Foundation, Inc.

Copyright (C) 2000, 2003 Free Software Foundation

Copyright (C) 2000, 2003 Free Software Foundation, Inc.

Copyright (C) 2000, 2003, 2004 Free Software Foundation

Copyright (C) 2000, 2003, 2004 Free Software Foundation, Inc.

Copyright (C) 2000, 2003, 2004, 2005 Free Software Foundation, Inc.

Copyright (C) 2000, 2005 Free Software Foundation, Inc.

Copyright (C) 2001 Free Software Foundation

Copyright (C) 2001 Free Software Foundation, Inc.

Copyright (C) 2001 Free Software Foundation, Inc. # Benjamin Kosnik <bkoz@redhat.com>, 2001.

Copyright (C) 2001, 2002 Free Software Foundation, Inc.

Copyright (C) 2001, 2002, 2003 Free Software Foundation

Copyright (C) 2001, 2002, 2003 Free Software Foundation, Inc.

Copyright (C) 2001, 2002, 2003 Peter Dimov

Copyright (C) 2001, 2002, 2003, 2004 Free Software Foundation

Copyright (C) 2001, 2002, 2003, 2004 Free Software Foundation, Inc.

Copyright (C) 2001, 2002, 2003, 2004, 2005 Free Software Foundation

Copyright (C) 2001, 2002, 2003, 2004, 2005 Free Software Foundation, Inc.

Copyright (C) 2001, 2002, 2003, 2004, 2005, 2006 // Free Software Foundation, Inc.

Copyright (C) 2001, 2002, 2003, 2004, 2005, 2006 Free Software Foundation

Copyright (C) 2001, 2002, 2003, 2004, 2005, 2006, 2007 # Free Software Foundation, Inc.

Copyright (C) 2001, 2002, 2003, 2004, 2005, 2006, 2007 // Free Software Foundation

Copyright (C) 2001, 2002, 2003, 2004, 2005, 2006, 2007 // Free Software Foundation, Inc.

Copyright (C) 2001, 2002, 2003, 2004, 2005, 2006, 2007 // Free Software Foundation

Copyright (C) 2001, 2002, 2003, 2004, 2005, 2006, 2007 // Free Software Foundation, Inc.

Copyright (C) 2001, 2002, 2003, 2004, 2005, 2006, 2007, 2008 ## Free Software Foundation, Inc.

Copyright (C) 2001, 2002, 2003, 2004, 2005, 2006, 2007, 2008 // Free Software Foundation

Copyright (C) 2001, 2002, 2003, 2004, 2005, 2006, 2007, 2008 // Free Software Foundation, Inc.

Copyright (C) 2001, 2002, 2003, 2004, 2008 Free Software Foundation, Inc.

Copyright (C) 2001, 2002, 2003, 2005 Free Software Foundation, Inc.

Copyright (C) 2001, 2002, 2003, 2005 Free Software Foundation

Copyright (C) 2001, 2002, 2003, 2005 Free Software Foundation, Inc.

Copyright (C) 2001, 2002, 2003, 2005, 2006 Free Software Foundation

Copyright (C) 2001, 2002, 2003, 2005, 2007 Free Software Foundation, Inc.

Copyright (C) 2001, 2002, 2003, 2006 Free Software Foundation, Inc.

Copyright (C) 2001, 2002, 2003, 2006, 2008 Free Software Foundation, Inc.

Copyright (C) 2001, 2002, 2004 Free Software Foundation, Inc.

Copyright (C) 2001, 2002, 2004, 2005 Free Software Foundation

Copyright (C) 2001, 2002, 2004, 2005 Free Software Foundation, Inc.

Copyright (C) 2001, 2002, 2004, 2005, 2006 Free Software Foundation, Inc.

Copyright (C) 2001, 2002, 2004, 2005, 2007 Free Software Foundation, Inc.

Copyright (C) 2001, 2002, 2004, 2005, 2008 Free Software Foundation, Inc.

Copyright (C) 2001, 2002, 2004, 2006 Free Software Foundation, Inc.

Copyright (C) 2001, 2002, 2005 Free Software Foundation, Inc.

Copyright (C) 2001, 2002, 2005, 2007 Free Software Foundation, Inc.

Copyright (C) 2001, 2002, 2005, 2008 Free Software Foundation, Inc. See license.html for license.

Copyright (C) 2001, 2003 Free Software Foundation

Copyright (C) 2001, 2003 Free Software Foundation

Copyright (C) 2001, 2003 Free Software Foundation, Inc.

Copyright (C) 2001, 2003, 2004 Free Software Foundation, Inc.

Copyright (C) 2001, 2003, 2004, 2005 Free Software Foundation, Inc.

Copyright (C) 2001, 2003, 2005 Free Software Foundation, Inc.

Copyright (C) 2001, 2003, 2005 Free Software Foundation

Copyright (C) 2001, 2003, 2007 Free Software Foundation, Inc.

Copyright (C) 2001, 2004 Free Software Foundation, Inc.

Copyright (C) 2001, 2004, 2005 Free Software Foundation, Inc.

Copyright (C) 2001, 2005 Free Software Foundation, Inc.

Copyright (C) 2001, 2007 Free Software Foundation, Inc.

Copyright (C) 2002 // Free Software Foundation, Inc.

Copyright (C) 2002 Free Software Foundation

Copyright (C) 2002 Free Software Foundation, Inc.

Copyright (C) 2002 Peter Dimov

Copyright (C) 2002, 2003 Free Software Foundation

Copyright (C) 2002, 2003 Free Software Foundation, Inc.

Copyright (C) 2002, 2003, 2004, 2005 Free Software Foundation

Copyright (C) 2002, 2003, 2004, 2005 Free Software Foundation, Inc.

Copyright (C) 2002, 2003, 2004, 2005, 2006, 2007 // Free Software Foundation, Inc.

Copyright (C) 2002, 2003, 2004, 2005, 2006, 2007, 2008 ## Free Software Foundation, Inc.

Copyright (C) 2002, 2003, 2004, 2005, 2006, 2007, 2008 Free // Software Foundation

Copyright (C) 2002, 2003, 2004, 2005, 2007 Free Software Foundation, Inc.

Copyright (C) 2002, 2003, 2004, 2007 Free Software Foundation, Inc.

Copyright (C) 2002, 2003, 2005 Free Software Foundation, Inc.

Copyright (C) 2002, 2003, 2005 Free Software Foundation, Inc.

Copyright (C) 2002, 2003, 2007 Free Software Foundation, Inc.

Copyright (C) 2002, 2004 Free Software Foundation

Copyright (C) 2002, 2004 Free Software Foundation, Inc.

Copyright (C) 2002, 2004, 2005 Free Software Foundation, Inc.

Copyright (C) 2002, 2004, 2005, 2007 Free Software Foundation, Inc.

Copyright (C) 2002, 2004, 2006 Free Software Foundation, Inc.

Copyright (C) 2002, 2005, 2007 Free Software Foundation, Inc.

Copyright (C) 2002, 2007 Free Software Foundation, Inc.

Copyright (C) 2003 // Free Software Foundation, Inc.

Copyright (C) 2003 Free Software Foundation

Copyright (C) 2003 Free Software Foundation, Inc.

Copyright (C) 2003, 2004 // Free Software Foundation, Inc.

Copyright (C) 2003, 2004 Free Software Foundation

Copyright (C) 2003, 2004 Free Software Foundation, Inc.

Copyright (C) 2003, 2004, 2005 // Free Software Foundation, Inc.

Copyright (C) 2003, 2004, 2005 Free Software Foundation, Inc.

Copyright (C) 2003, 2004, 2005 Free Software Foundation

Copyright (C) 2003, 2004, 2005 Free Software Foundation, Inc.

Copyright (C) 2003, 2004, 2005, 2006 // Free Software Foundation, Inc.

Copyright (C) 2003, 2004, 2005, 2006 Free Software Foundation

Copyright (C) 2003, 2004, 2005, 2006 Free Software Foundation, Inc.

Copyright (C) 2003, 2004, 2005, 2006, 2007 // Free Software Foundation, Inc.

Copyright (C) 2003, 2004, 2005, 2006, 2007 Free Software Foundation

Copyright (C) 2003, 2004, 2005, 2006, 2007 Free Software Foundation, Inc.

Copyright (C) 2003, 2004, 2005, 2006, 2007, 2008 // Free Software Foundation, Inc.

Copyright (C) 2003, 2004, 2005, 2006, 2007, 2008 Free Software // Foundation, Inc.

Copyright (C) 2003, 2004, 2005, 2007 Free Software Foundation

Copyright (C) 2003, 2004, 2005, 2007 Free Software Foundation, Inc.

Copyright (C) 2003, 2004, 2006 Free Software Foundation, Inc.

Copyright (C) 2003, 2005 Free Software Foundation

Copyright (C) 2003, 2005 Free Software Foundation, Inc.

Copyright (C) 2003, 2005, 2006 // Free Software Foundation, Inc.

Copyright (C) 2003, 2005, 2006 Free Software Foundation, Inc.

Copyright (C) 2003, 2006 // Free Software Foundation, Inc.

Copyright (C) 2003, 2007 Free Software Foundation, Inc.

Copyright (C) 2004 Ami Tavory and Vladimir Dreizin, IBM-HRL.

Copyright (C) 2004 Free Software Foundation

Copyright (C) 2004 Free Software Foundation, Inc.

Copyright (C) 2004, 2005 Free Software Foundation, Inc.

Copyright (C) 2004, 2005 Free Software Foundation

Copyright (C) 2004, 2005 Free Software Foundation, Inc.

Copyright (C) 2004, 2005, 2006 Free Software Foundation

Copyright (C) 2004, 2005, 2006 Free Software Foundation, Inc.

Copyright (C) 2004, 2005, 2006, 2007 Free Software Foundation

Copyright (C) 2004, 2005, 2006, 2007 Free Software Foundation, Inc.

Copyright (C) 2004, 2005, 2006, 2007, 2008 // Free Software Foundation, Inc.

Copyright (C) 2004, 2005, 2006, 2007, 2008 Free Software Foundation, Inc.

Copyright (C) 2004, 2005, 2007 Free Software Foundation

Copyright (C) 2004, 2005, 2007 Free Software Foundation, Inc.

Copyright (C) 2004, 2006 Free Software Foundation, Inc.

Copyright (C) 2004, 2006, 2008 Free Software Foundation, Inc.

Copyright (C) 2004, 2007 Free Software Foundation, Inc.

Copyright (C) 2005 Free Software Foundation, Inc.

Copyright (C) 2005 Free Software Foundation

Copyright (C) 2005 Free Software Foundation, Inc.

Copyright (C) 2005, 2006 // Free Software Foundation, Inc.

Copyright (C) 2005, 2006 Free Software Foundation, Inc.

Copyright (C) 2005, 2006, 2007 Free Software Foundation

Copyright (C) 2005, 2006, 2007 Free Software Foundation, Inc.

Copyright (C) 2005, 2006, 2007, 2008 Free Software Foundation, Inc.

Copyright (C) 2005, 2006, 2008 Free Software Foundation, Inc.

Copyright (C) 2005, 2007 Free Software Foundation, Inc.

Copyright (C) 2006 // Free Software Foundation, Inc.

Copyright (C) 2006 Free Software Foundation

Copyright (C) 2006 Free Software Foundation

Copyright (C) 2006 Free Software Foundation, Inc.

Copyright (C) 2006, 2006 Free Software Foundation

Copyright (C) 2006, 2007 Free Software Foundation

Copyright (C) 2006, 2007 Free Software Foundation, Inc.

Copyright (C) 2006, 2007, 2008 // Free Software Foundation, Inc.

Copyright (C) 2006, 2007, 2008 Free Software Foundation

Copyright (C) 2006, 2007, 2008 Free Software Foundation, Inc.

Copyright (C) 2006, 2008 // Free Software Foundation, Inc.

Copyright (C) 2006-2007 Free Software Foundation, Inc.

Copyright (C) 2007 // Free Software Foundation, Inc.

Copyright (C) 2007 Free Software Foundation

Copyright (C) 2007 Free Software Foundation, Inc.

Copyright (C) 2007, 2008 Free Software Foundation

Copyright (C) 2007, 2008 Free Software Foundation, Inc.

Copyright (C) 2007,2008 Free Software Foundation, Inc.

Copyright (C) 2008 Free Software Foundation

Copyright (C) 2008 Free Software Foundation, Inc.

Copyright (c) 1994 * Hewlett-Packard Company

Copyright (c) 1996 * Silicon Graphics Computer Systems, Inc.

Copyright (c) 1996,1997 * Silicon Graphics

Copyright (c) 1996,1997 * Silicon Graphics Computer Systems, Inc.

Copyright (c) 1996-1997 * Silicon Graphics Computer Systems, Inc.

Copyright (c) 1996-1998 * Silicon Graphics Computer Systems, Inc.

Copyright (c) 1996-1999 * Silicon Graphics Computer Systems, Inc.

Copyright (c) 1997 * Silicon Graphics Computer Systems, Inc.

Copyright (c) 1997-1999 * Silicon Graphics Computer Systems, Inc.

Copyright (c) 1998 * Silicon Graphics Computer Systems, Inc.

Copyright (c) 2001, 2002, 2003 Peter Dimov and Multi Media Ltd.

Copyright 2008 FSF

Copyright Ami Tavory and Vladimir Dreizin, IBM-HRL, 2004, and Benjamin Kosnik, Red Hat, 2004.

Copyright Â© 1989, 1991 Free Software Foundation, Inc.

Copyright Â© 1998 ISO.

Copyright Â© 1999 The Open Group/The Institute of Electrical and Electronics Engineers, Inc..

Copyright Â© 1999 ISO.

Copyright Â© 2000 Addison Wesley Longman, Inc..

Copyright Â© 2000 Addison Wesley, Inc..

Copyright Â© 2000, 2001, 2002, 2003, 2004, 2005, 2006, 2007, 2008

Copyright Â© 2002 OOPSLA.

Copyright Â© 2004, 2005, 2006, 2007 Free Software Foundation, Inc., 51 Franklin Street, Fifth Floor, Boston, MA 02110-1301, USA

Copyright Â© 2004, 2005, 2006, 2007 Free Software Foundation, Inc., 51 Franklin Street, Fifth Floor, Boston, MA 02110-1301, USA</para>

Copyright Â© 2007 FSF.

copyrighted by the Free Software Foundation

copyrighted by the Free Software Foundation