SIEMENS

Technical Instructions
Document No. CA1N4454E-P25
Rev. 2, August, 2000

M3P…FY Series

Modulating Control Valve ANSI 125 (PN 16) with Magnetic Actuator for Hot and Chilled Water with Positioning Control and Position Feedback



Description

Mixing or straight-through valves with magnetic actuators for modulating control of hot and chilled water systems.

Features

- Fast positioning time (<1 second)
- High resolution (>1: 1,000)
- High rangeability
- 1 → 3 closed when de-energized
- Positioning control and position feedback
- Low friction, heavy-duty and maintenance-free

Product Numbers

Table 1.

Product Number	Line Size [in]	Cv [gpm]	Δ pv max		PN [VA]	Pmed [VA]	q AWG		
			[psi]	[bar]			16	14	12
							L [ft]		
M3P80FY	3	93	44	3	80	20	33	52	89
M3P100FY	4	152	29	2	120	30	20	33	56

Δp_{vmax} = Maximum admissible pressure differential
P_N = Nominal power
P_{med} = Mean operating power
k_{vs} = Flow rate, tolerance ±10%
q = Cross section of wire
L = Maximum cable length. With 4-wire connections, the maximum permissible length of the separate 16 AWG Cu signal cable is 650 feet.

Warning/Convention Notations

WARNING	⚠	Personal injury/loss of life may occur if a procedure is not performed as specified.
CAUTION	⚠	Equipment damage, or loss of data may occur if the user does not follow a procedure as specified.

Application

The M3P...FY valves are mixing or straight-through port valves with a ready-mounted magnetic actuator. The actuator has electronics for positioning control and position feedback. If the power is off, the valve control path 1 → 3 is closed.

⚠ **CAUTION:**

The valve is suitable for straight-through or three-way applications and may be installed only in a mixing arrangement.

The short positioning time, high resolution and high rangeability make these valves ideal for proportional control of hot and chilled water systems.

The low-friction, heavy-duty and maintenance-free construction make regular service unnecessary.

Ordering

The valves are supplied with the magnetic actuator and terminal housing. The blank flanges required for straight-through applications must be ordered separately (see *Accessories*).

When placing an order, specify the quantity, product number and description.

Example:

1 M3P80FY flanged valve and 1 Z155/80 blank flange

Technical/ Mechanical Design

The control signal is converted in the terminal housing into a phase cut signal that generates a magnetic field in the coil. This causes the only moving part, the armature, to change its position in accordance with the interacting forces (magnetic field, counter-spring, hydraulics etc.). The armature responds rapidly to any change in signal, transferring the corresponding movement directly to the control disc, enabling fast changes in load to be corrected quickly and accurately.

The valve position is measured continuously. Any disturbance in the system is rapidly corrected by the internal positioning controller, which ensures that the control signal and the valve stroke are exactly proportional, and also provides a feedback signal indicating the valve position.

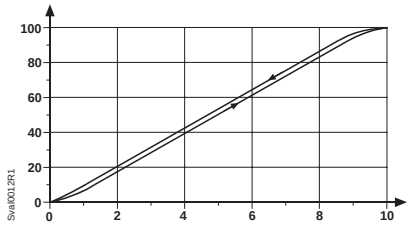

Figure 1. Position-Signal.

Technical/ Mechanical Design, Continued

If the power is switched off or fails, the valve control path (Port 1 → 3) is automatically closed by the force of the spring.

The valve stem is sealed with a maintenance-free O-ring gland.

Manual Adjustment

Control path Ports 1 → 3 can be opened mechanically to between 0 and approximately 90%, by turning the handwheel clockwise. The manual adjustment facility can also be used as a mechanical method of low limit control, i.e., the valve will exercise its normal control function between the manually-set position and the 100% open position. For full-stroke automatic control, the handwheel must be set to 0 (the counterclockwise end-stop).

Accessories

Close off Port 2 in straight-through applications. The blank flange kit consists of a seal, screws, spring washers and nuts.

Z155/80 and Z155/100 Blank flange kit for flanged valves with 3-inch to 4-inch line size.

Sizing

Water Flow Equation:

$$C_v = \frac{Q}{\sqrt{\Delta p}}$$

Where:
C_v = Flow Coefficient
Q = Volumetric flow rate (gpm)
Δp = Pressure drop, psi

Installation

Mounting instructions for the valve and terminal housing are enclosed with the valve.



CAUTION:

Always disconnect the power before fitting or removing the terminal housing. The terminal housing is calibrated and matched to the actuator, and should be replaced only by qualified personnel.

- The M3P...Y valve is suitable for straight-through or three-way applications but can only be installed in a mixing arrangement.
- Vertical to horizontal mounting – do not mount below horizontal.
- The actuator must not be insulated.
- Only three-way valves are supplied, but these may be used in straight-through applications by sealing Port 2 as described in the *Straight-through Application* section.

NOTE: It is recommended that water systems be cleaned, flushed and treated in accordance with Current Good Practices.

Installation, Continued

Straight-through Application

The blank flange kit consists of a seal, screws, spring washers and nuts.

- For 3-inch to 4-inch Blank Flange Kit (Z155/80 ... Z155/100)

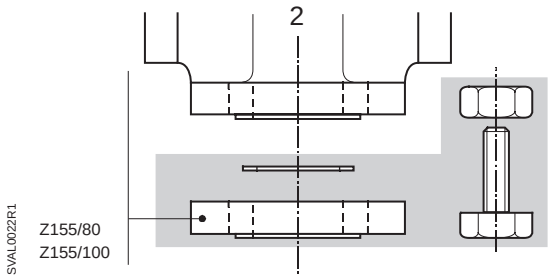

Figure 2. Straight-through Application.

Specifications

Electrical interface	Class 2
Control signal	0 to 10 Vdc or 4 to 20 mA
Supply voltage	24 Vac, 50/60 Hz
– Maximum voltage tolerance	+15/–10%
Nominal power	See *Table 1*
Position feedback (output signal):	0 to 10 Vdc = 0 to 100% stroke
Maximum load	1.5 mA
Accuracy	±3% of full scale
Nominal pressure	ANSI 125 (PN16)
Operating pressure $p_e$max	14 psi (10 bar)
Pressure differential Δp_Vmax	See *Table 1*
Leakage at Δp_V = 14.5 psi (1bar)	1 → 3 Maximum 0.03% C_V 2 → 3 Depends on application data (approximately 2% C_V)
Water temperature	35 to 248°F (2 to 120°C)
Valve characteristic (stroke, kv)	Linear, optimized in low-opening range
Resolution ΔH / H100	>1: 1000 (H = stroke)
Type of operation	Modulating
Manual adjustment	0% to maximum 90% depending on line size
Position when de-energized	1 → 3 closed
Orientation	Upright to horizontal
Positioning time	<1 second
Materials (valve body):	
Housing	Cast iron
Inner valve	Steel
Seat	Brass
Valve spindle seal	EPDM (O-ring)
Connection terminals	Screw terminals for maximum 12 AWG wire
Ambient temperature	35 to 122°F (2 to 50°C)
Weight (including packaging)	See *Dimensions*
Conformity	Meets CE requirements

Wiring

Connection Terminals

WARNING:

If the controller and valves receive their power supplies from separate sources, the valve transformer must not be grounded on the secondary side.

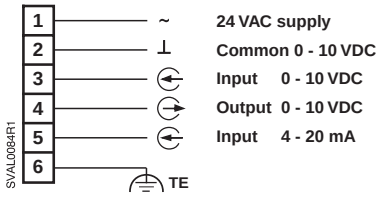

Figure 3. Terminal Layout.

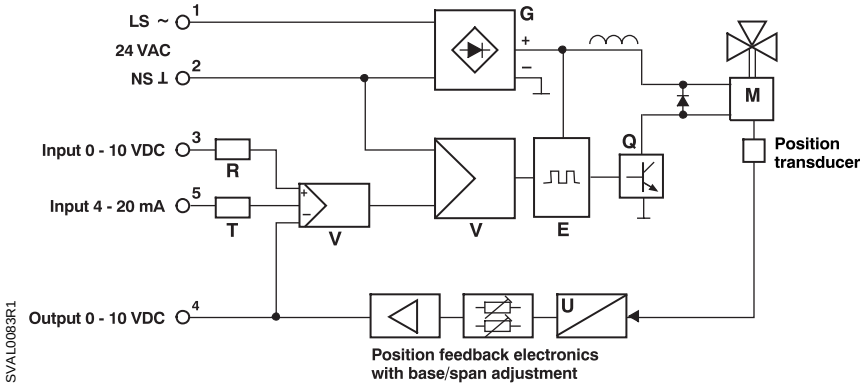

Figure 4. Block Diagram of Signal Converter.

Key:

E Phase cut converter	R Input resistor 50K ohms
G Bridge rectifier	T Voltage/current converter (load on 350 ohms to NS)
M Magnetic valve	U Position/voltage converter
Q Phase cut output	V Differential amplifier

Wiring Diagrams

WARNING:

The T2 transformer must not be grounded on the secondary side and should be suitably fused.

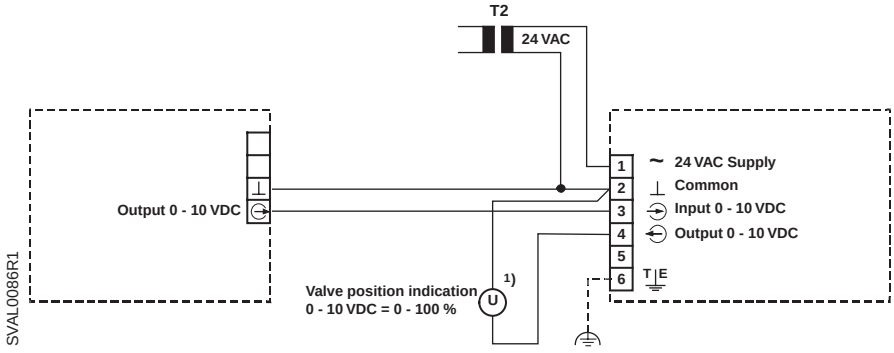

Figure 5. Wiring Diagram with 0 to 10 Vdc Output Controllers.

Wiring Diagrams, Continued

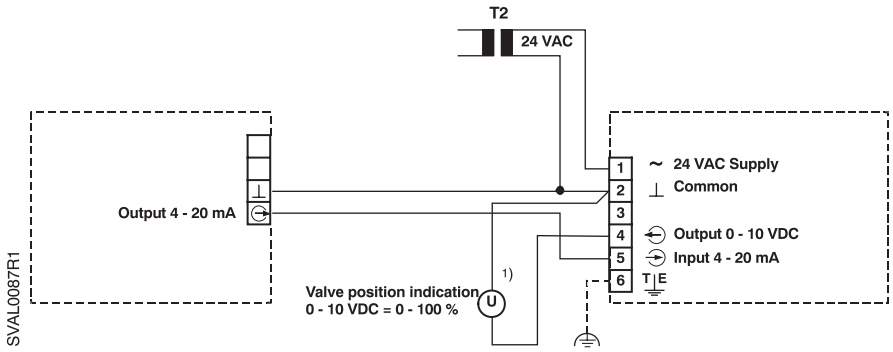

Figure 6. Wiring Diagram with 4 to 20 mA Output Controllers.

Application Examples

The hydraulic circuits shown here are schematic diagrams only, without installation-specific details.

WARNING:

The valve is suitable for straight-through or three-way applications and can only be installed in a mixing arrangement.

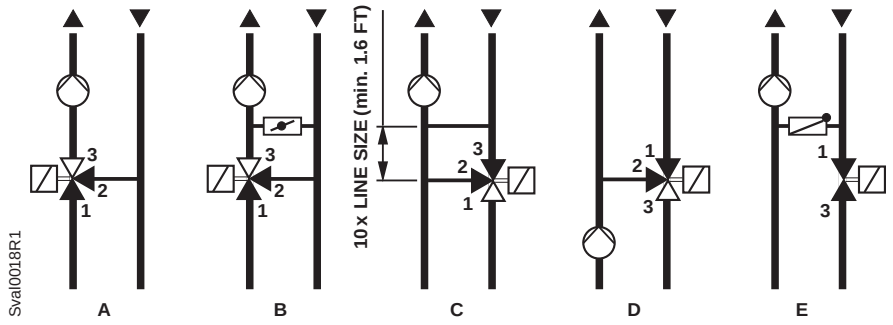

A Mixing circuit
B Mixing circuit with bypass (under-floor heating)
C Injection circuit
D Diverting circuit
E Injection circuit with straight-through valve

Figure 7. Circuit Schematic Diagrams.

Dimensions

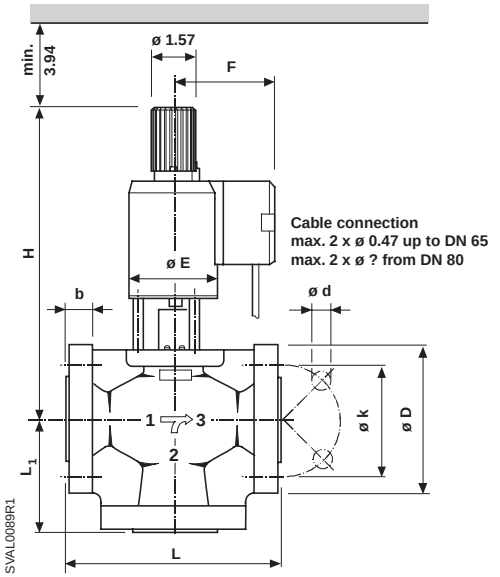

– Counter-flanges are not supplied.
– Flange dimensions to DIN2533, ANSI 125 (PN16)
W = Weight in lbs. (kg) (including packaging)

Figure 8. Dimensions in Inches (Millimeters).

Product Number	L	L1	D	b	k	d	H	E	F	W
M3P80FY	12.20 (310)	5.51 (140)	7.87 (200)	0.87 (22)	6.30 (160)	8 x 0.71 (8 x 18)	20.00 (508)	5.71 (145)	4.88 (124)	100.0 (45.5)
M3P100FY	13.78 (350)	6.30 (160)	8.66 (220)	0.94 (24)	7.09 (180)	8 x 0.71 (8 x 18)	22.44 (570)	5.71 (145)	4.88 (124)	130.0 (59.0)

Information in this publication is based on current specifications. The company reserves the right to make changes in specifications and models as design improvements are introduced. © 2000 Siemens Building Technologies, Inc.