SIEMENS

Data sheet 5SG5701

NEOZED, fuse base, D02, 3-pole, 63 A, Un AC: 400 V, Un DC: 250 V



Model	
Product brand name	NEOZED
Product designation	Fuse base
Design of the product	NEOZED fuse base installation
version	with protection against contact BGV A3
General technical data	
Number of poles	3
Size of fuse system / acc. to DIN EN 60269-1	D02
Supply voltage	
Operating voltage / rated value	400 V
Dissipation	
Power loss [W] / for rated value of the current / at AC / in hot operating state / per pole	3 W
Main circuit	
Operating current / rated value	63 A
Product details	
Product component / Cover	Yes

Subject to change without notice
© Copyright Siemens

Mechanical Design

Height	83 mm
Width	81 mm
Depth	64 mm
Mounting type	DIN rail
Net weight	380 g
Material / of D fuse base	plastic

Certificates

Reference code	
• acc. to DIN EN 61346-2	F
• acc. to DIN EN 81346-2	F

General Product Approval	Declaration of Conformity	Test Certificates
VDE	EG-Konf.	Type Test Certificates/Test Report

Further information

Information- and Downloadcenter (Catalogs, Brochures,…)
http://www.siemens.com/lowvoltage/catalogs

Industry Mall (Online ordering system)
https://mall.industry.siemens.com/mall/en/en/Catalog/product?mlfb=5SG5701

Service&Support (Manuals, Certificates, Characteristics, FAQs,...)
https://support.industry.siemens.com/cs/ww/en/ps/5SG5701

Image database (product images, 2D dimension drawings, 3D models, device circuit diagrams, ...)
http://www.automation.siemens.com/bilddb/cax_en.aspx?mlfb=5SG5701

CAx-Online-Generator
http://www.siemens.com/cax

Tender specifications
http://www.siemens.com/specifications

Subject to change without notice
© Copyright Siemens

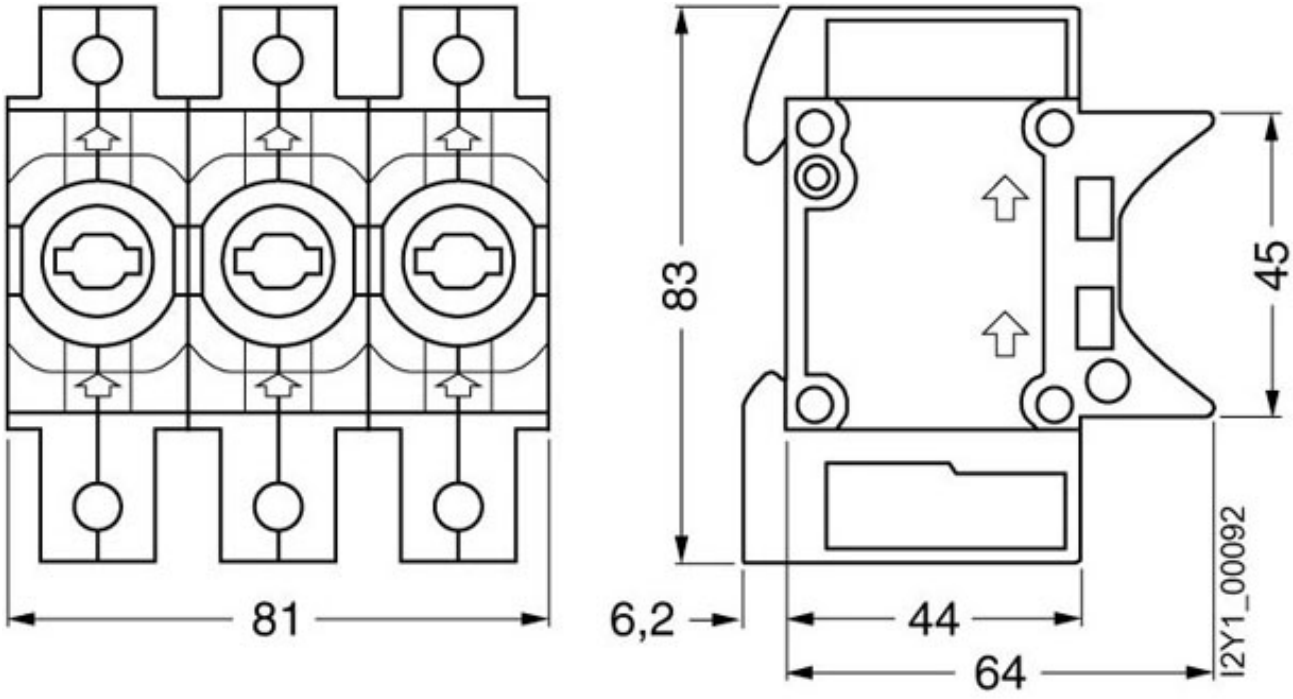

Subject to change without notice
© Copyright Siemens

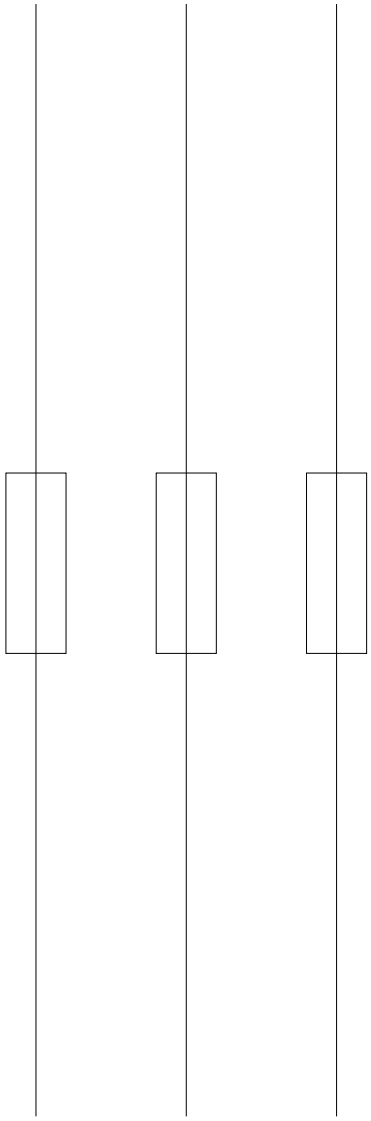

Subject to change without notice
© Copyright Siemens