SIEMENS

Data sheet 3VL9400-3MQ00

accessory for VL400, mot. op. mech. w/ strd en. mech 220...250V AC/DC

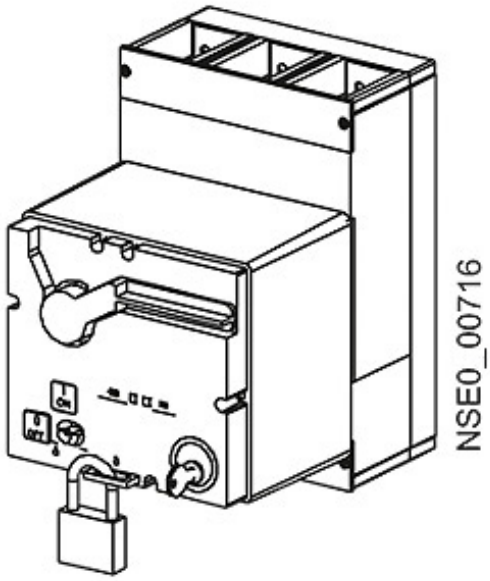

Model	
Product brand name	SENTRON
Product designation	Motorized operating mechanism with stored energy mechanism
Design of the product	Accessory for VL400
Type of the driving mechanism	Motorized operating mechanism with spring energy store

General technical data	
Break time / typical	5 s
Pulse duration / minimum	50 ms
Operating frequency / maximum	120 1/h

Voltage	
Fuse protection type / for external auxiliary power supply / required	NEOZED fuse (gL/gG): 2 A / miniature circuit breaker, C char.: 2 A
Operating range factor control supply voltage rated value	
• at DC / initial value	0.85
• at DC / Full-scale value	1.1
• at AC / at 50 Hz / initial value	0.85
• at AC / at 50 Hz / Full-scale value	1.1

Subject to change without notice
© Copyright Siemens

• at AC / at 60 Hz / initial value	0.85
• at AC / at 60 Hz / Full-scale value	1.1

Protection class	
Protection class IP	IP30

Current	
Make time / typical	0.1 s

Control current	
Operating apparent output	200 V·A
Control supply voltage	
• at DC / rated value / minimum	250 V
• at DC / rated value / maximum	220 V
• at AC / at 50 Hz / rated value / minimum	220 V
• at AC / at 50 Hz / rated value / maximum	250 V
• at AC / at 60 Hz / rated value / minimum	220 V
• at AC / at 60 Hz / rated value / maximum	250 V

Accessories	
accessories	Accessories for VL400

Connections	
Wire stripping length	10 mm
Connectable conductor cross-section / solid	
• minimum	0.75 mm²
• maximum	1.5 mm²
Connectable conductor cross-section / stranded	
• minimum	0.75 mm²
• maximum	1.5 mm²
Connectable conductor cross-section / finely stranded / with core end processing	
• minimum	0.75 mm²
• maximum	1.5 mm²
Tightening torque	
• maximum	1 N·m

Mechanical Design	
Height	160 mm
Width	140 mm
Depth	160 mm
Net weight	4 593 g

Environmental conditions	
Ambient temperature / during operation	
• minimum	-25 °C
• maximum	70 °C

Subject to change without notice
© Copyright Siemens

Ambient temperature / during storage	
• minimum	-40 °C
• maximum	80 °C

Certificates

Reference code	
• acc. to DIN EN 61346-2	M
• acc. to DIN EN 81346-2	M

General Product Approval	EMC	Declaration of Conformity	Test Certificates	Shipping Approval	
Miscellaneous	C-Tick	EG-Konf.	Special Test Certificate	BUREAU VERITAS	PRS

Shipping Approval		other			
RINA	RMRS	Miscellaneous	Environmental Confirmations	Confirmation	Manufacturer Declaration

Further information

Information- and Downloadcenter (Catalogs, Brochures,…)
http://www.siemens.com/lowvoltage/catalogs

Industry Mall (Online ordering system)
https://mall.industry.siemens.com/mall/en/en/Catalog/product?mlfb=3VL9400-3MQ00

Service&Support (Manuals, Certificates, Characteristics, FAQs,...)
https://support.industry.siemens.com/cs/ww/en/ps/3VL9400-3MQ00

Image database (product images, 2D dimension drawings, 3D models, device circuit diagrams, ...)
http://www.automation.siemens.com/bilddb/cax_en.aspx?mlfb=3VL9400-3MQ00

CAx-Online-Generator
http://www.siemens.com/cax

Tender specifications
http://www.siemens.com/specifications

Subject to change without notice
© Copyright Siemens

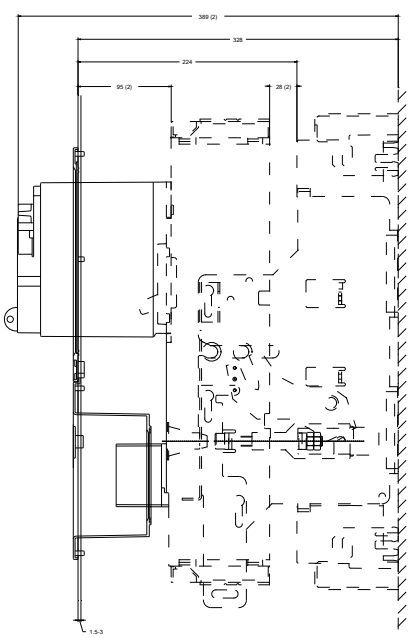

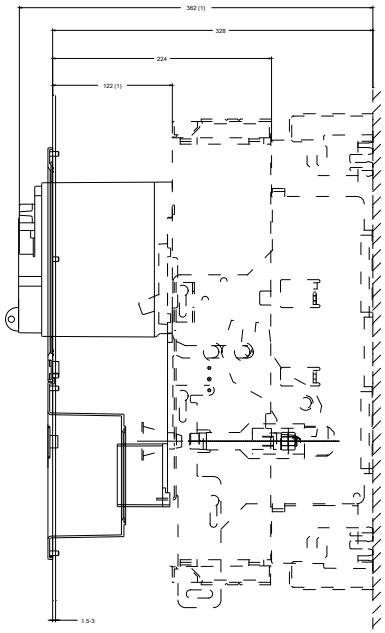

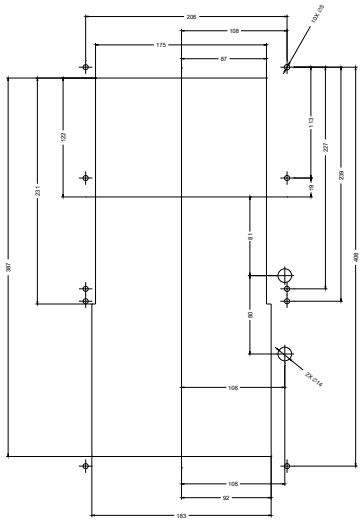

(1) Betriebsstellung
(2) Trennstellung

Subject to change without notice
© Copyright Siemens