SIEMENS

Circuit Breaker, frame only
Interruptor automatico, caja base
Disjoncteur de base

	U.S. Cat. No.	Euro Order No.
Item:	NMG _ F_00	3VL60_0 - 1RA _ _ - 0AA0
	HMG _ F_00	3VL60_0 - 2RA _ _ - 0AA0
	LMG _ F_00	3VL60_0 - 3RA _ _ - 0AA0
	NMH _ F _ _ _	3VL60 _ _ - 5RA _ _ - 0AA0
	HMH _ F _ _ _	3VL60 _ _ - 6RA _ _ - 0AA0
	LMH _ F _ _ _	3VL60 _ _ - 7RA _ _ - 0AA0

For Use With Frame MG
Para Usar Con Caja Base MG

Installation Instructions / Instructivo de Instalación

⚠ Danger	⚠ Peligro	⚠ Danger!
Hazardous Voltage **Will cause death or serious injury** Turn off and lock out all power supplying this device before working on this device. Replace all covers before power supplying this device is turned on.	**Tensión peligrosa.** **Puede causar la muerte o lesiones graves.** Desenergice totalmente antes de instalar o darle servicio. Reemplace todas las barreras y cubiertas antes de energizar el interruptor.	**Tension dangereuse.** **Danger de mort ou risque de blessures graves.** Couper l'alimentation de l'appareil et barrer avant de travailler. Remplacez touts les couverts avant que l'approvisionnement de pouvoir soit alimenté.

Use only with Siemens certified Components.
Utilizar únicamente con componentes certificados de Siemens.
A utiliser uniquement avec les composants certifiés Siemens .

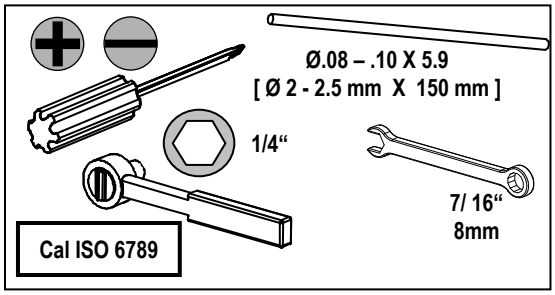

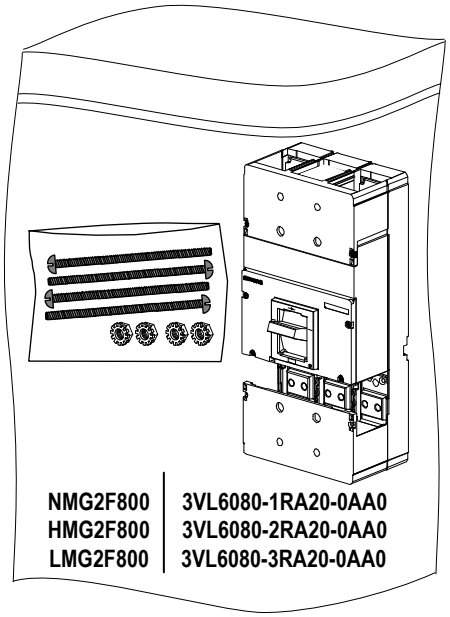

NMG2F800	3VL6080-1RA20-0AA0
HMG2F800	3VL6080-2RA20-0AA0
LMG2F800	3VL6080-3RA20-0AA0

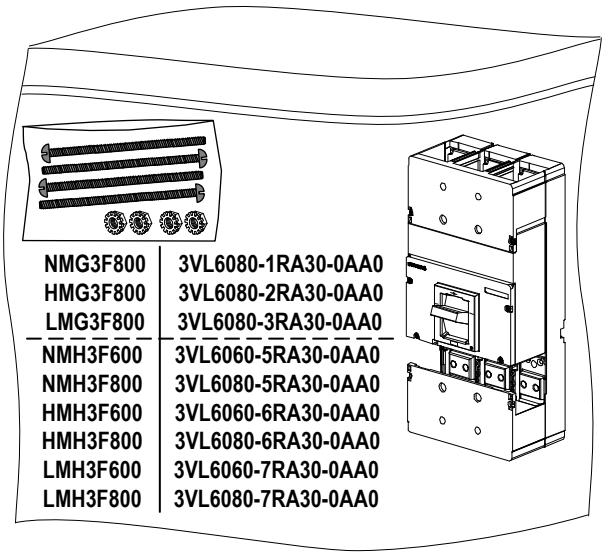

NMG3F800	3VL6080-1RA30-0AA0
HMG3F800	3VL6080-2RA30-0AA0
LMG3F800	3VL6080-3RA30-0AA0
NMH3F600	3VL6060-5RA30-0AA0
NMH3F800	3VL6080-5RA30-0AA0
HMH3F600	3VL6060-6RA30-0AA0
HMH3F800	3VL6080-6RA30-0AA0
LMH3F600	3VL6060-7RA30-0AA0
LMH3F800	3VL6080-7RA30-0AA0

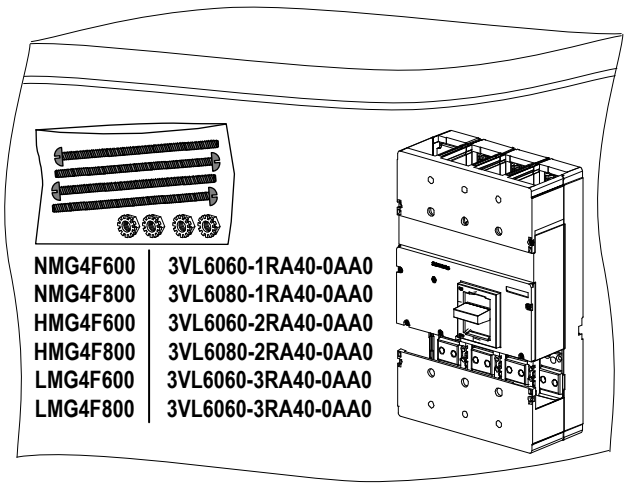

NMG4F600	3VL6060-1RA40-0AA0
NMG4F800	3VL6080-1RA40-0AA0
HMG4F600	3VL6060-2RA40-0AA0
HMG4F800	3VL6080-2RA40-0AA0
LMG4F600	3VL6060-3RA40-0AA0
LMG4F800	3VL6060-3RA40-0AA0

1

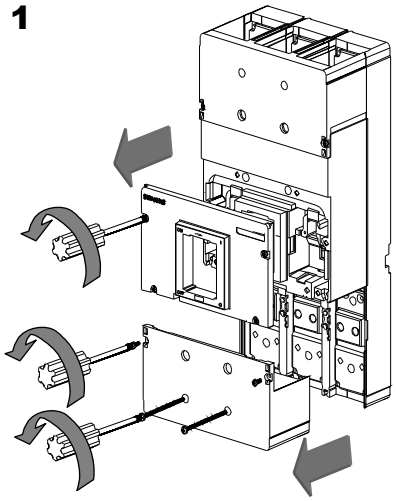

2

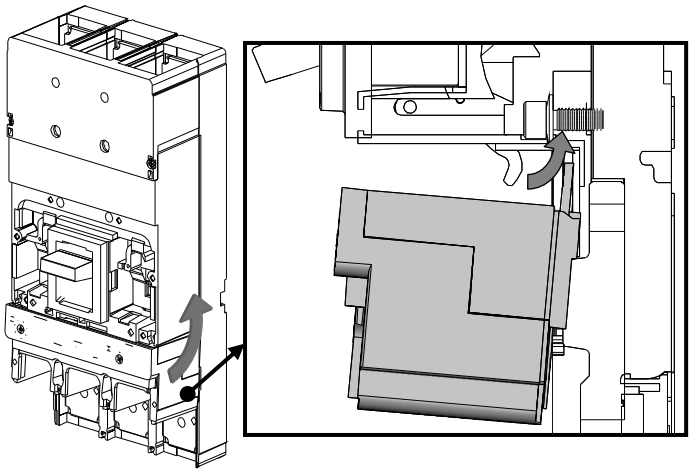

3

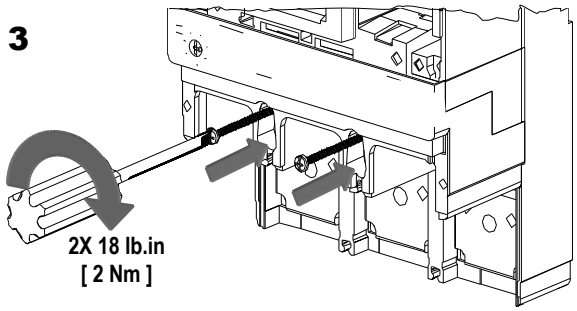

4

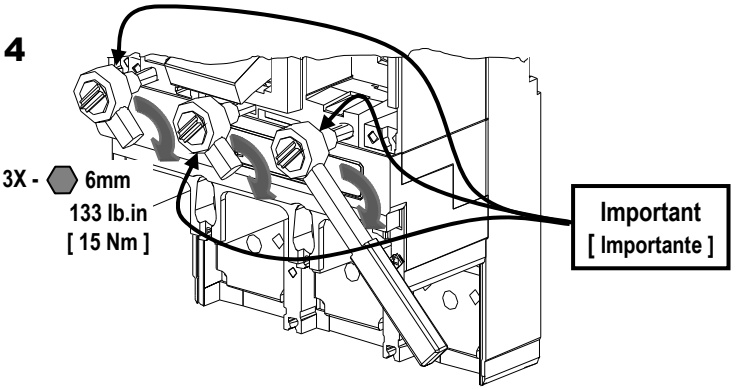

5

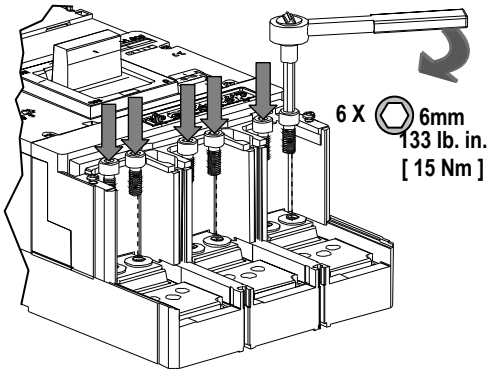

6 **EX: HMG3F800 / 3VL6080-2RA30-0AA0**

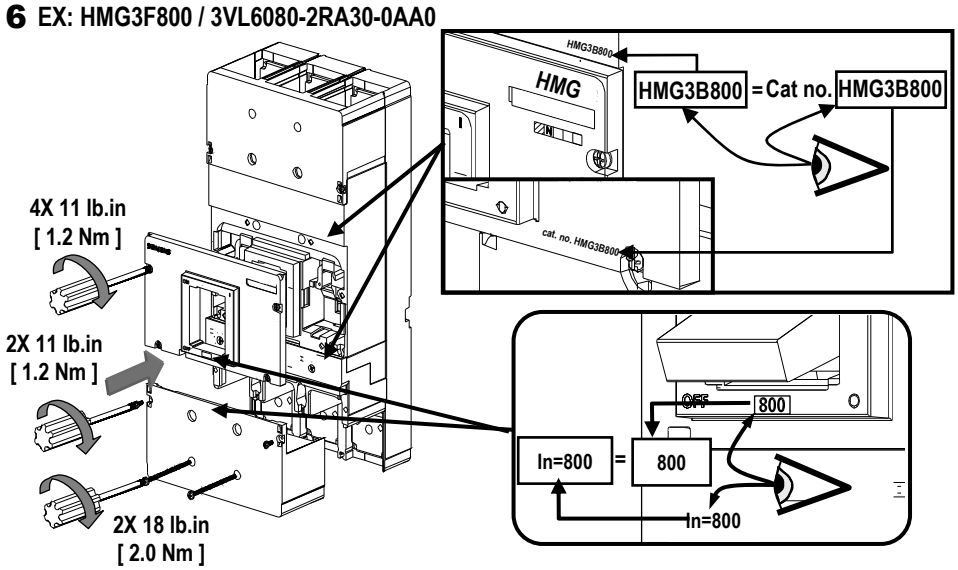

⚠ Danger	⚠ Peligro	⚠ Danger!
Hazardous Voltage **Will cause death or serious injury** Turn off and lock out all power supplying this device before working on this device. Replace all covers before power supplying this device is turned on.	**Tensión peligrosa.** **Puede causar la muerte o lesiones graves.** Desenergice totalmente antes de instalar o darle servicio. Reemplace todas las barreras y cubiertas antes de energizar el interruptor.	**Tension dangereuse.** **Danger de mort ou risque de blessures graves.** Couper l'alimentation de l'appareil et barrer avant de travailler. Remplacez touts les couverts avant que l'approvisionnement de pouvoir soit alimenté.

Test:
[Prueba:]

7

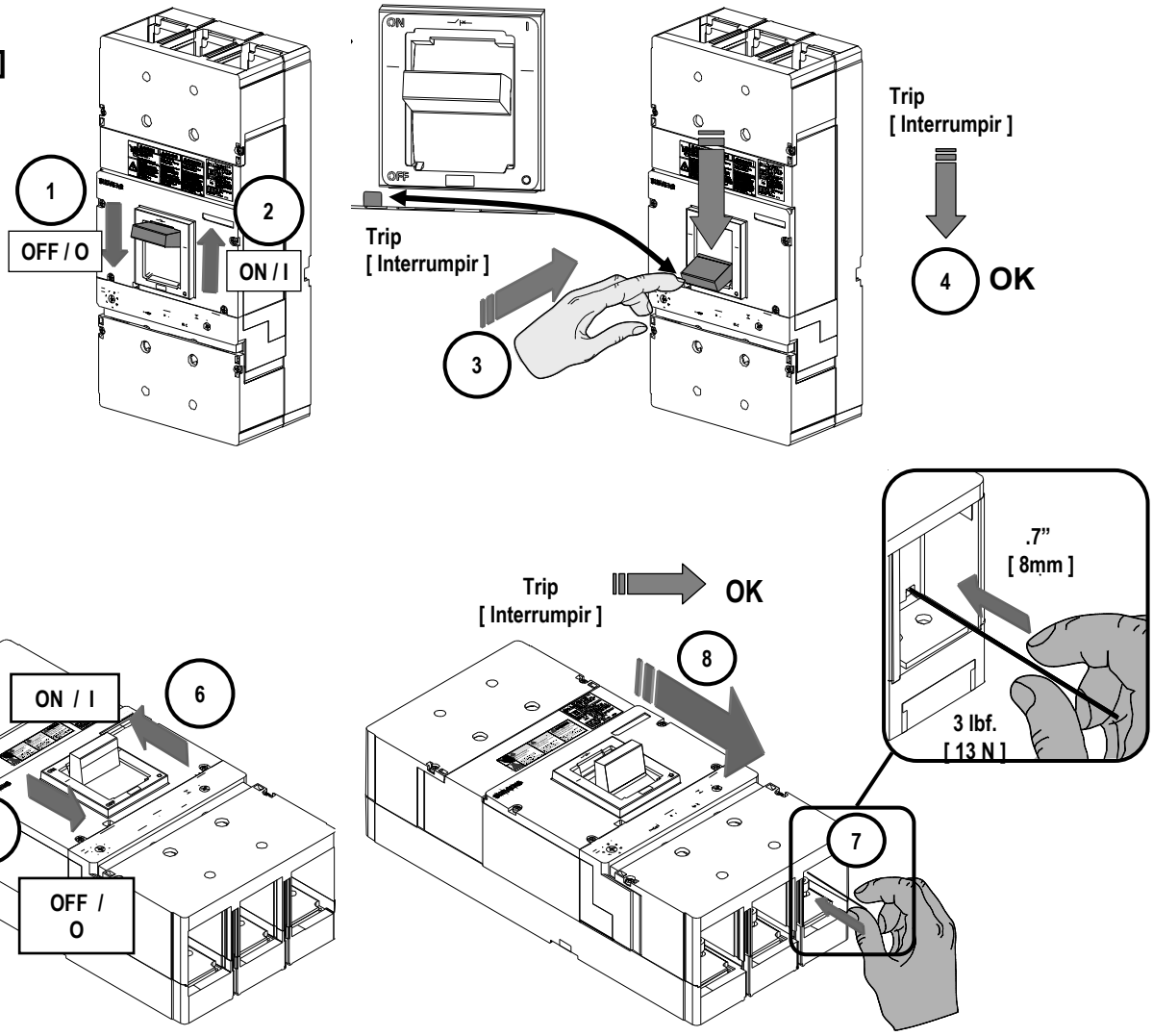

8

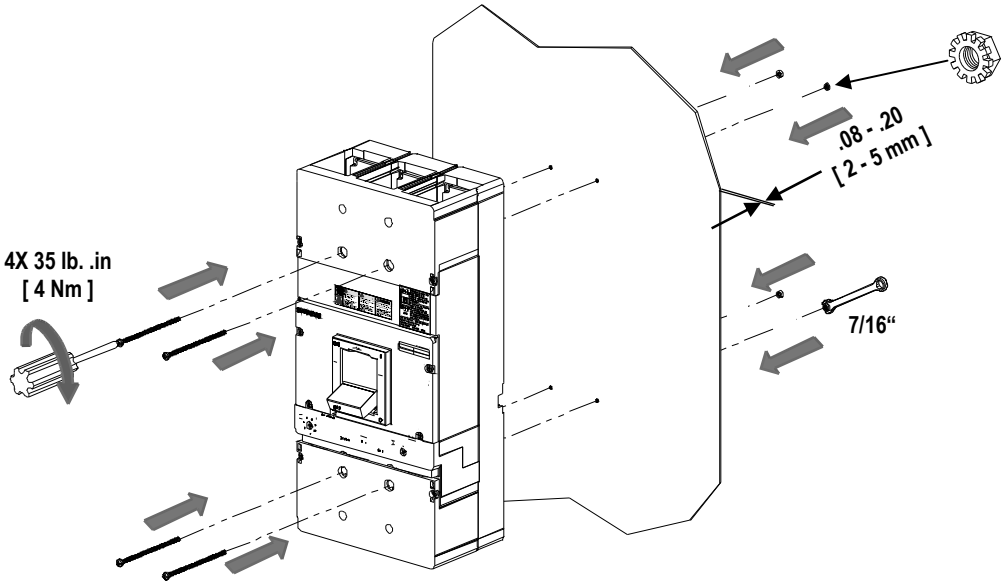

806805A03

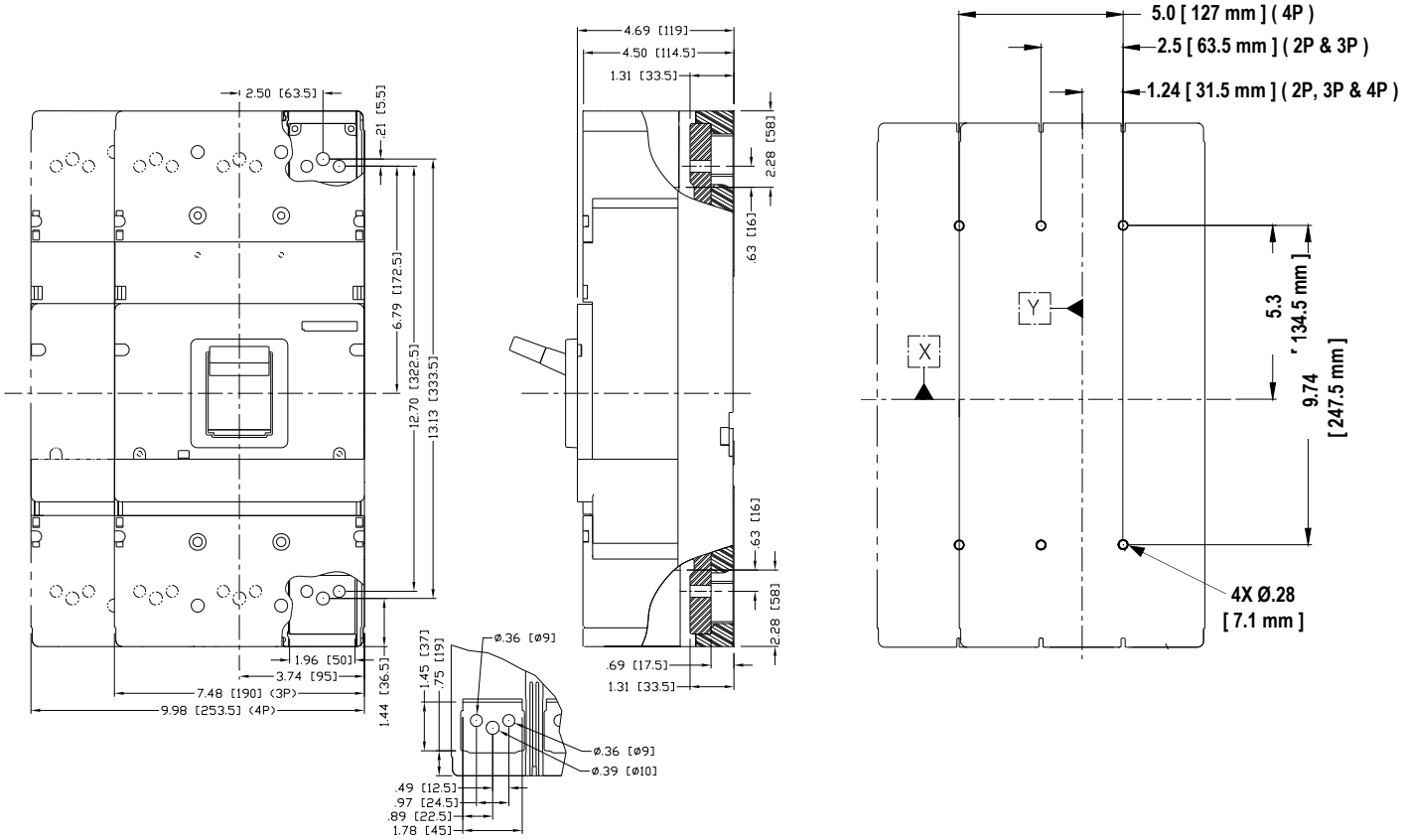

Vented [Ventilados]		Not Vented [No Ventilados]	
NMH _ F _ _ _	3VL60 _ _ - 5 RA _ _ - 0AA0	NMG _ F800	3VL6080 – 1 RA _ _ - 0AA0
HMH _ F _ _ _	3VL60 _ _ - 6 RA _ _ - 0AA0	HMG _ F800	3VL6080 – 2 RA _ _ - 0AA0
LMH _ F _ _ _	3VL60 _ _ - 7 RA _ _ - 0AA0	LMG _ F800	3VL6080 – 3 RA _ _ - 0AA0
NMY _ F _ _ _	3VL61 _ _ - 1 _ _ _ _ - 0AA0	NMX _ F _ _ _	3VL61 _ _ - 1 _ _ _ _ - 0AA0
HMY _ F _ _ _	3VL61 _ _ - 2 _ _ _ _ - 0AA0	HMX _ F _ _ _	3VL61 _ _ - 2 _ _ _ _ - 0AA0
LMY _ F _ _ _	3VL61 _ _ - 3 _ _ _ _ - 0AA0	LMX _ F _ _ _	3VL61 _ _ - 3 _ _ _ _ - 0AA0

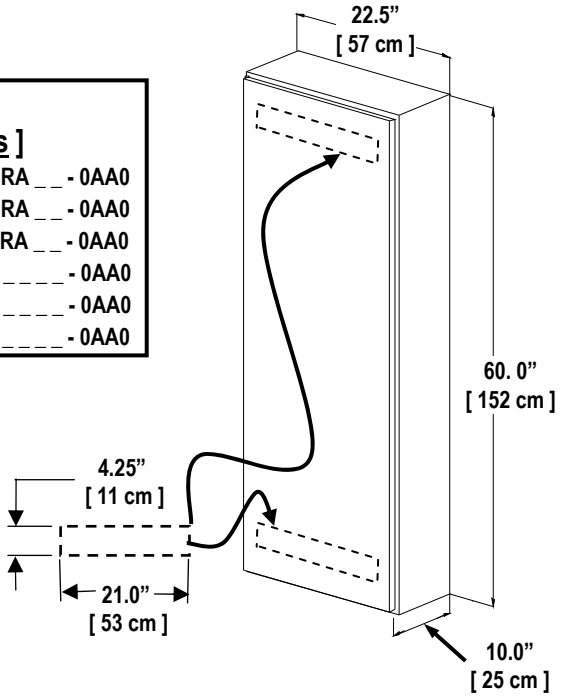

Suitable for continuous operation at 100% of rating only if used in a ventilated enclosure or cubicle space 60 by 22.5 by 10 in. Ventilation openings are 4.25 by 21 in. at top and bottom of enclosure.

Apto para operar a 100% Intensidad continua si es usado solamente en cajas cerradas o cubículos ventilados de 152 por 57 por 25 cm. Los orificios de ventilación son de 11 por 53 cm. en la parte de abajo y de arriba de las cajas cerradas.

⚠ Danger	⚠ Peligro	⚠ Danger!
Hazardous Voltage **Will cause death or serious injury** Turn off and lock out all power supplying this device before working on this device. Replace all covers before power supplying this device is turned on.	**Tensión peligrosa.** **Puede causar la muerte o lesiones graves.** Desenergice totalmente antes de instalar o darle servicio. Reemplace todas las barreras y cubiertas antes de energizar el interruptor.	**Tension dangereuse.** **Danger de mort ou risque de blessures graves.** Couper l'alimentation de l'appareil et barrer avant de travailler. Remplacez touts les couverts avant que l'approvisionnement de pouvoir soit alimenté.

General Information:
[Información General:]

4 Pole Application example:
[Aplicación ejemplo de 4 polos :]

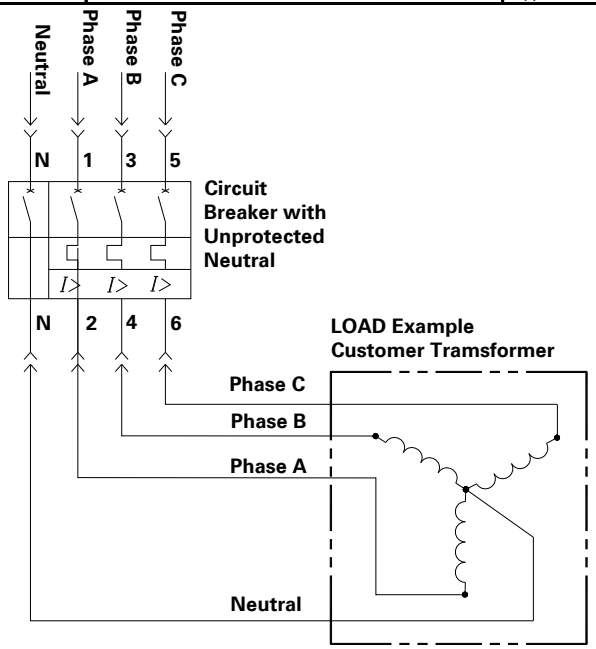

Accessory
[Accesorio]

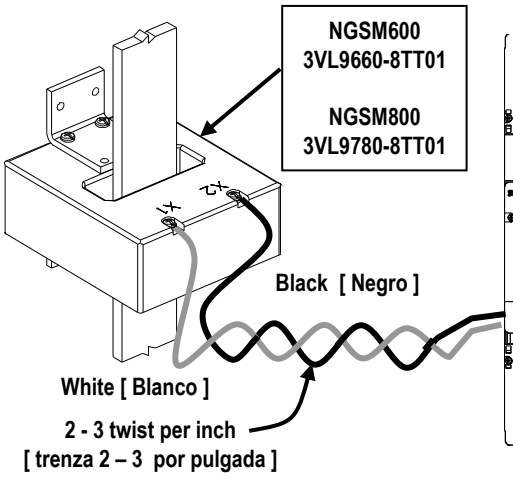

CMT3U600	3VL9660-6GH39
CMT3U800	3VL9680-6GH39
CMT3X600	3VL9660-6GD39
CMT3X800	3VL9680-6GD39

Accessory
[Accesorio]

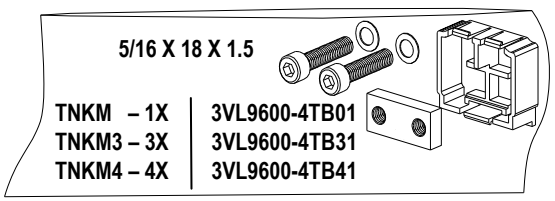

TNKM – 1X	3VL9600-4TB01
TNKM3 – 3X	3VL9600-4TB31
TNKM4 – 4X	3VL9600-4TB41

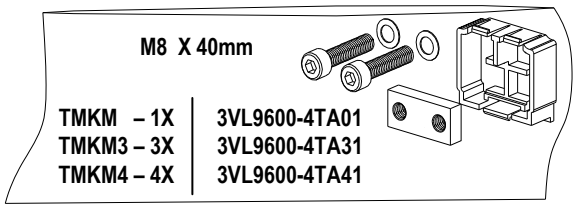

TMKM – 1X	3VL9600-4TA01
TMKM3 – 3X	3VL9600-4TA31
TMKM4 – 4X	3VL9600-4TA41

For Support in Europe refer to :

Bestell-Nr. / Order No.: 3ZX1012-0VL60-0AA1 Internet: www.siemens.de/lowvoltage/technical-assistance **GWA 4NEB 176 6805-10 DS 03**

Technical Support: Toll Free: 1-800-964-4114 Internet: www.sea.siemens.com

Subject to change without prior notice
Siemens Energy & Automation Inc. , Alpharetta, GA U.S.A.
© Siemens Energy & Automation Inc. 2006