SIEMENS

Data sheet 5TE4800



button, 1 NO/1 NC 20 A 1 key gray without latching function

Model	
product brand name	SENTRON
product designation	Pushbutton
design of the product	1 NO contact/1 NC contact
type of light source	LED
socket design for light source	others
mechanical service life (switching cycles) typical	25 000
type of voltage of the operating voltage	AC
surge voltage resistance rated value	4 kV
Supply voltage	
operating voltage rated value	230 V
Protection class	
protection class IP	IP20
making capacity current	60 A
breaking capacity current	60 A
Dissipation	
power loss [W]	
● for rated value of the current at AC in hot operating state per pole	0.6 W
● maximum	0.6 W
Current	
operational current at AC rated value	20 A
Appearance	
color	
● of the button	grey
Product details	
product component signal lamp	No
number of NC contacts	1
number of NO contacts	1
number of CO contacts	0
Display and operation	
number of keys	1
connectable conductor cross-section for flexible conductor with core end processing	
● minimum	1 mm²
● maximum	6 mm²
connectable conductor cross-section for rigid conductor	
● minimum	1 mm²
● maximum	6 mm²
tightening torque with screw-type terminals	

Subject to change without notice
© Copyright Siemens

● minimum	0.8 N·m
● maximum	1 N·m

Mechanical Design	
height	90 mm
depth	70 mm
installation depth	70 mm
number of modular width units	1
net weight	73 g
ambient temperature during operation	
● minimum	-5 °C
● maximum	40 °C

General Product Approval	Declaration of Conformity

Confirmation









Test Certificates	other	
Miscellaneous	Environmental Confirmations	Miscellaneous

Further information

Information- and Downloadcenter (Catalogs, Brochures,…)
http://www.siemens.com/lowvoltage/catalogs
Industry Mall (Online ordering system)
https://mall.industry.siemens.com/mall/en/en/Catalog/product?mlfb=5TE4800
Service&Support (Manuals, Certificates, Characteristics, FAQs,...)
https://support.industry.siemens.com/cs/ww/en/ps/5TE4800
Image database (product images, 2D dimension drawings, 3D models, device circuit diagrams, ...)
http://www.automation.siemens.com/bilddb/cax_en.aspx?mlfb=5TE4800
CAx-Online-Generator
http://www.siemens.com/cax
Tender specifications
http://www.siemens.com/specifications

Subject to change without notice
© Copyright Siemens

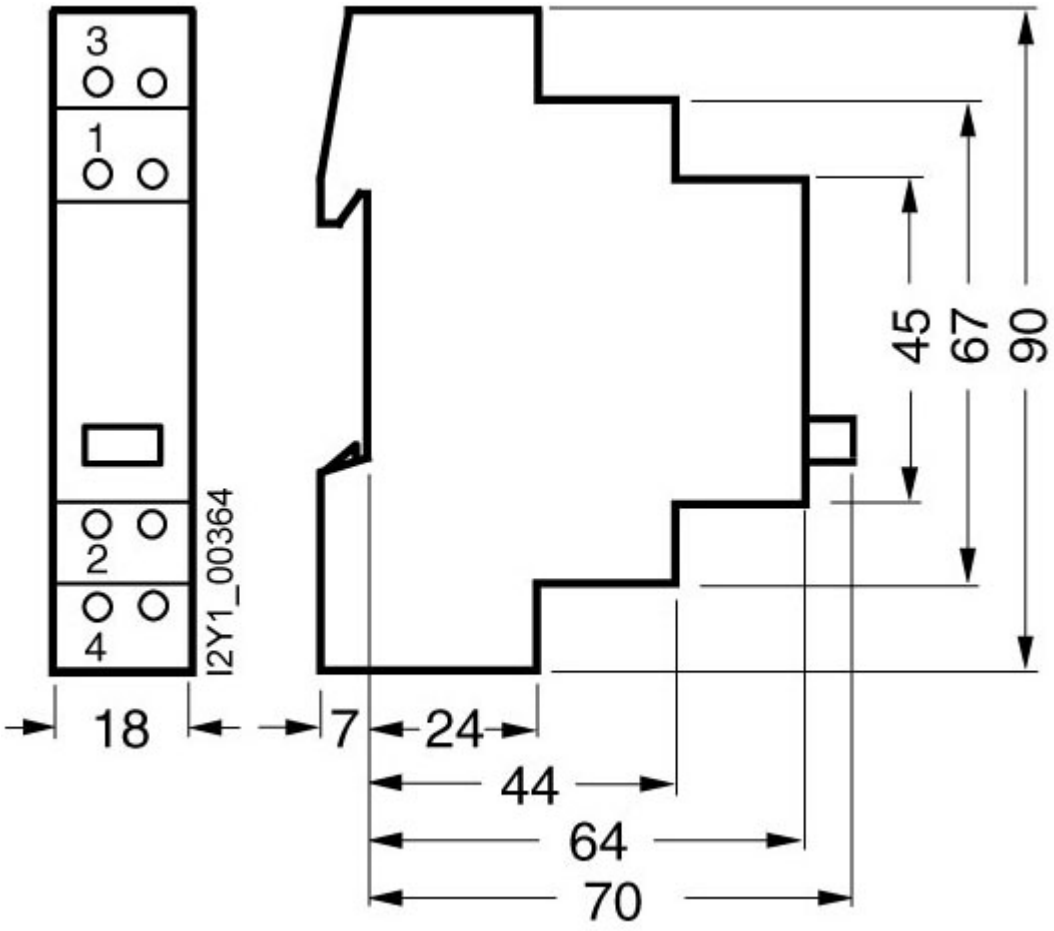

Subject to change without notice
© Copyright Siemens

Subject to change without notice
© Copyright Siemens