SIEMENS

Compression Lugs
Bornes de Compresión
Connexion Compression

	U.S. Cat. No.	Euro Order No.
item:	_CLJ350	3VL9435-4TM_1
	_CLJ600	3VL9460-4TM_1
	_CLJ750	3VL9475-4TM_1
	_CLL350	3VL9435-4TM_1
	_CLL600	3VL9460-4TM_1
	_CLL750	3VL9475-4TM_1

For Use With Frame JG, LG
Para Usar Con Caja Base JG, LG

Installation Instructions / Instructivo de Instalación

⚠ Danger	⚠ Peligro	⚠ Danger
Hazardous Voltage. **Will cause death or serious injury.** Turn off and lock out all power supplying this device before working on this device. Replace all covers before power supplying this device is turned on.	**Tensión peligrosa.** **Puede causar la muerte o lesiones graves.** Desenergice totalmente antes de instalar o darle servicio. Reemplace todas las barreras y cubiertas antes de energizar el interruptor.	**Tension dangereuse.** **Danger de mort ou risque de blessures graves.** Couper l'alimentation de l'appareil et barrer avant de travailler. Remplacez touts les couverts avant que l'approvisionnement de pouvoir soit alimenté.

Use only with Siemens certified Components.
Utilizar únicamente con componentes certificados de Siemens.
A utiliser uniquement avec les composants certifiés Siemens.

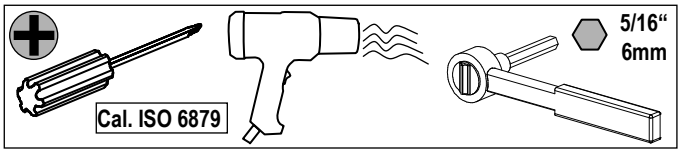

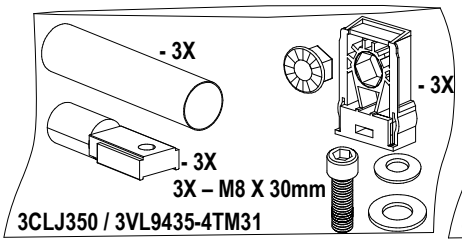

3CLJ350 / 3VL9435-4TM31

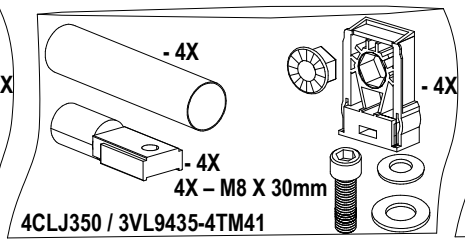

4CLJ350 / 3VL9435-4TM41

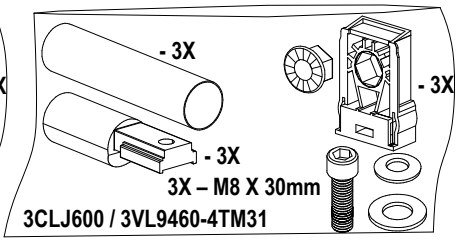

3CLJ600 / 3VL9460-4TM31

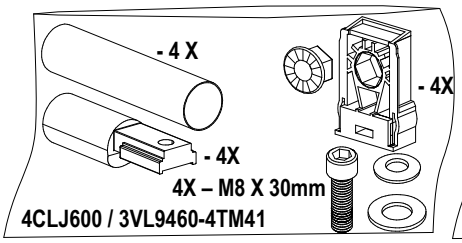

4CLJ600 / 3VL9460-4TM41

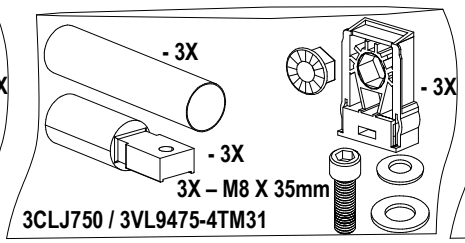

3CLJ750 / 3VL9475-4TM31

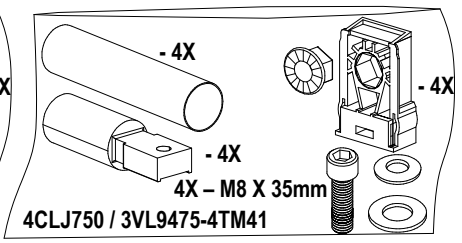

4CLJ750 / 3VL9475-4TM41

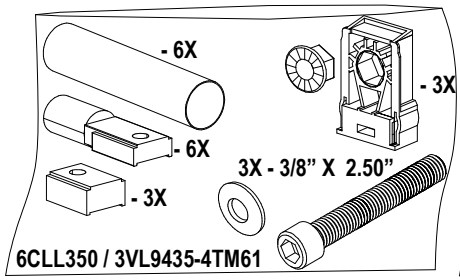

6CLL350 / 3VL9435-4TM61

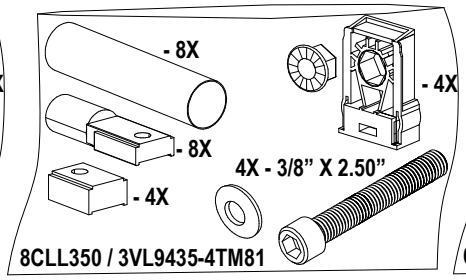

8CLL350 / 3VL9435-4TM81

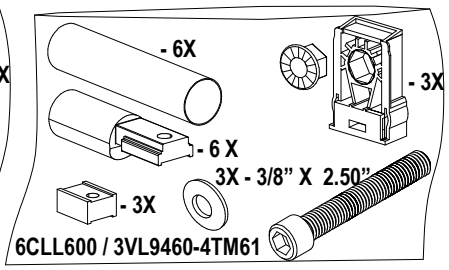

6CLL600 / 3VL9460-4TM61

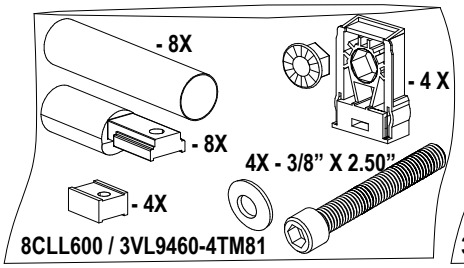

8CLL600 / 3VL9460-4TM81

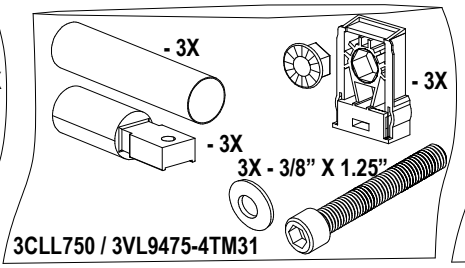

3CLL750 / 3VL9475-4TM31

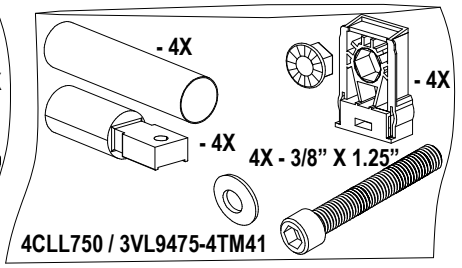

4CLL750 / 3VL9475-4TM41

1

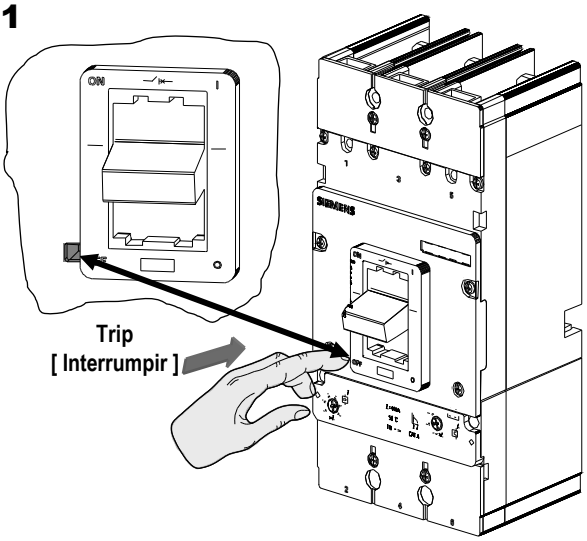

2

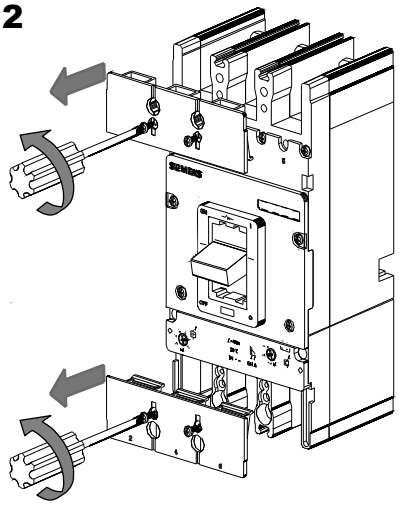

3

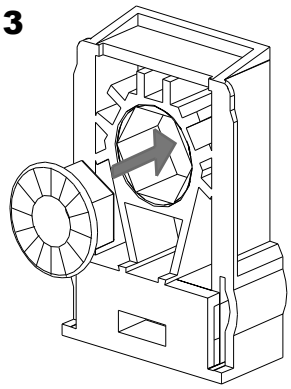

4

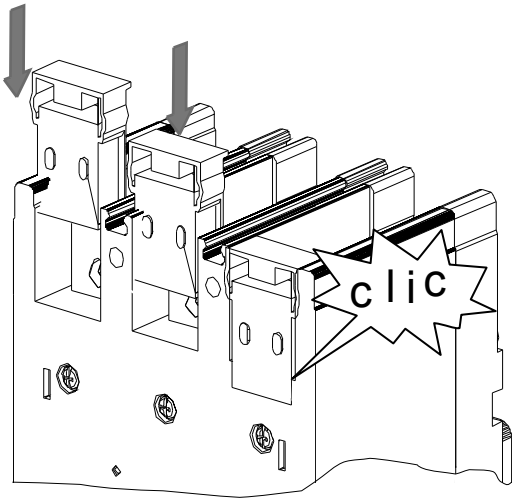

5

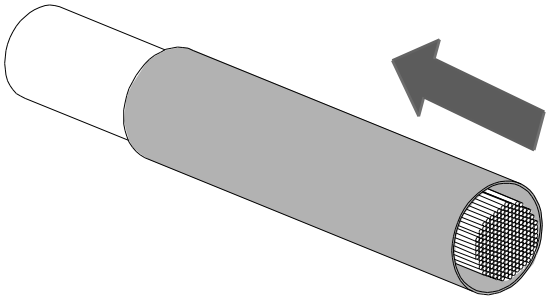

6

3CLJ350 / 3VL9435-4TM31
4CLJ350 / 3VL9435-4TM41
6CLL350 / 3VL9435-4TM61
8CLL350 / 3VL9435-4TM81

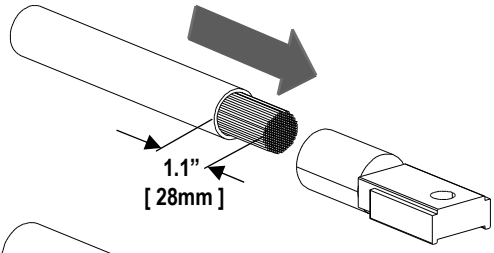

3CLJ600 / 3VL9460-4TM31
4CLJ600 / 3VL9460-4TM41
6CLL600 / 3VL9460-4TM61
8CLL600 / 3VL9460-4TM81

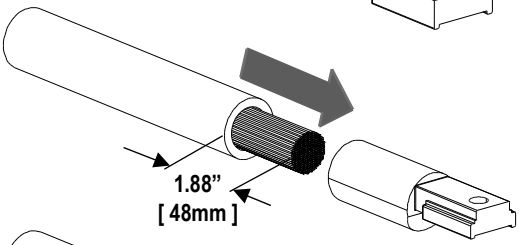

3CLJ750 / 3VL9475-4TM31
4CLJ750 / 3VL9475-4TM41
3CLL750 / 3VL9475-4TM61
4CLL750 / 3VL9475-4TM81

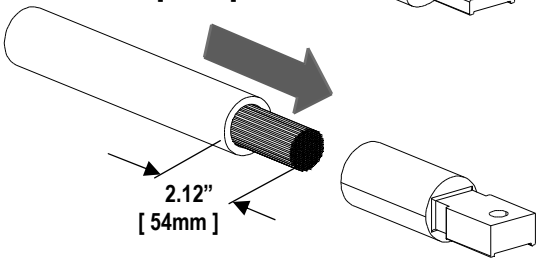

7 No. of Crimps [Cantidad de Compressiones]

See table, pages 3/4 + 4/4
[Ver tabla, paginas 3/4 + 4/4]

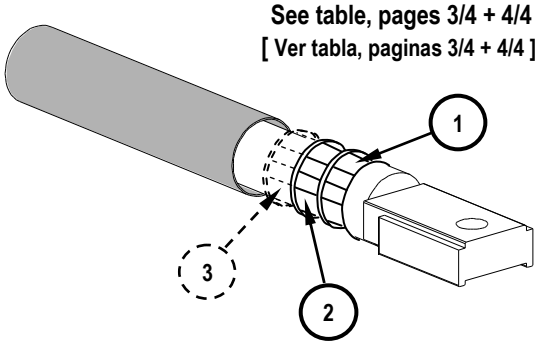

⚠ Danger	⚠ Peligro	⚠ Danger
Hazardous Voltage. **Will cause death or serious injury.** Turn off and lock out all power supplying this device before working on this device. Replace all covers before power supplying this device is turned on.	**Tensión peligrosa.** **Puede causar la muerte o lesiones graves.** Desenergice totalmente antes de instalar o darle servicio. Reemplace todas las barreras y cubiertas antes de energizar el interruptor.	**Tension dangereuse.** **Danger de mort ou risque de blessures graves.** Couper l'alimentation de l'appareil et barrer avant de travailler. Remplacez touts les couverts avant que l'approvisionnement de pouvoir soit alimenté.

Compression Tool and Die chart for copper and aluminum conductors
[Tabla de herramienta y molde para conductores de aluminio y cobre]

	Wire Size [Rango Cable]	Tool Mfg. [Suplidor de Herramienta]	Tool No. [Número de Herramienta]	Die No. [Torquel Número de]	No. of Crimps [Cantidad de Compressiones]	UL 486A - 486B Req. Wire Stranding [Cable] CU / AL Class B	CU Class C
3CLJ350 / 3VL9435-4TM31 4CLJ350 / 3VL9435-4TM41 6CLL350 / 3VL9435-4TM61 8CLL350 / 3VL9435-4TM81 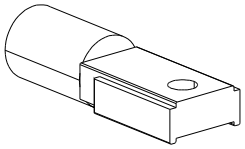	350 kcmil	Homac	UT - 15	76	2	37	61
		T & B	TMB-15				
		Burndy	Y - 35	249	1		
				324 658	2		
		Kearny	WH - 2	840	4		
	6 - 2 kcmil [16 – 35 mm^2]	Hubbell – Anderson	VC - 6	--------	1	7	19
	1 – 4 / 0 kcmil [50 – 95 mm^2]					19	37
	250 – 350 kcmil [120 – 150 mm^2]					37	61

Compression Tool and Die chart for copper and aluminum conductors
[Tabla de herramienta y molde para conductores de aluminio y cobre]

	Wire Size [Rango Cable]	Tool Mfg. [Suplidor de Herramienta]	Tool No. [Número de Herramienta]	Die No. [Torquel Número de]	No. of Crimps [Cantidad de Compressiones]	UL 486A - 486B Req. Wire Stranding [Cable] CU / AL Class B	CU Class C
3CLJ600 / 3VL9460-4TM31 4CLJ600 / 3VL9460-4TM41 6CLL600 / 3VL9460-4TM61 8CLL600 / 3VL9460-4TM81 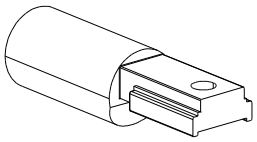	600 kcmil	Homac	UT - 15	160A	3	61	91
		Burndy	Y -35 Y – 39 Y – 750 Y – 45 Y - 46	300 317	3		
		Kearny	WH - 2	15 / 16	3		
	250 – 500 kcmil [150 – 240 mm^2]	Hubbell – Anderson	VC – 6 - FT	--------	3	37	61
	600 kcmil [300 mm^2]					61	91

Compression Tool and Die chart for copper and aluminum conductors [Tabla de herramienta y molde para conductores de aluminio y cobre]						UL 486A - 486B Req. Wire Stranding (Cable)	
	Wire Size [Rango Cable]	Tool Mfg. [Suplidor de Herramienta]	Tool No. [Número de Herramienta]	Die No. [Torquel Número de]	No. of Crimps [Cantidad de Compressiones]	CU / AL Class B	CU Class C
3CLJ750 / 3VL9475-4TM31 4CLJ750 / 3VL9475-4TM41 3CLL750 / 3VL9475-4TM31 4CLL750 / 3VL9475-4TM41 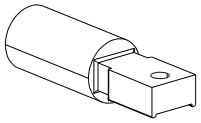	750 kcmil	Homac	UT - 15	115H	3	61	91
		Burndy	Y – 35 Y – 39 Y – 750 Y – 45 Y – 46	473 786 936	3		
		Kearny	WH - 2	1 5/16	3		
	250 – 500 kcmil [150 – 185 mm^2]	Hubbell – Anderson	VC – 6 - FT	--------	3	37	61
	600 – 750 kcmil [240 - 300 mm^2]					61	91

8

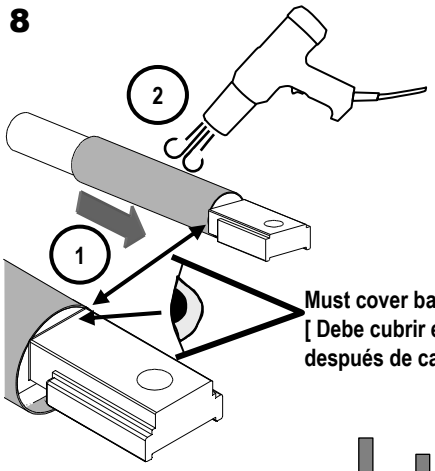

Must cover barrel completely after heating
[Debe cubrir el barril completamente después de calentarlo]

9a

LG

6CLL350 / 3VL9435-4TM61
8CLL350 / 3VL9435-4TM81

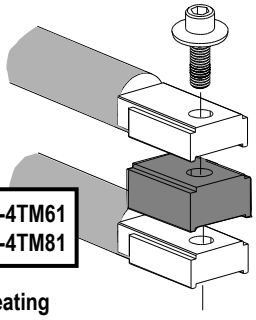

9b

LG

6CLL600 / 3VL9460-4TM61
8CLL600 / 3VL9460-4TM81

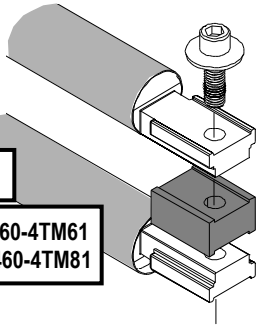

10

3CLJ350 / 3VL9435-4TM31
3CLJ600 / 3VL9460-4TM31
3CLJ750 / 3VL9475-4TM31

4CLJ350 / 3VL9435-4TM41
4CLJ600 / 3VL9460-4TM41
4CLJ750 / 3VL9475-4TM41

JG

6mm
6X 133 lb.in.
[15 Nm]

6CLL350 / 3VL9435-4TM61
6CLL600 / 3VL9460-4TM61
6CLL750 / 3VL9475-4TM61

8CLL350 / 3VL9435-4TM81
8CLL600 / 3VL9460-4TM81
4CLL750 / 3VL9475-4TM81

LG

5/16"
6X 212 lb.in.
[24 Nm]

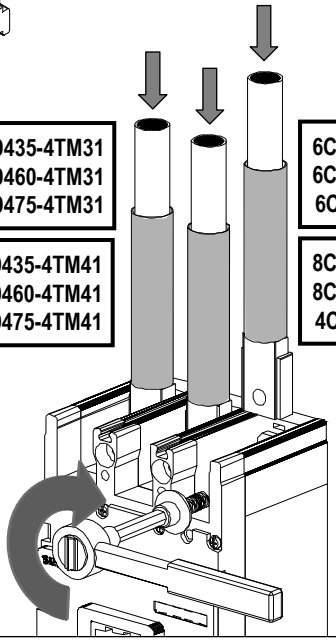

11

JG

4X 11 lb.in.
[1.2 Nm]

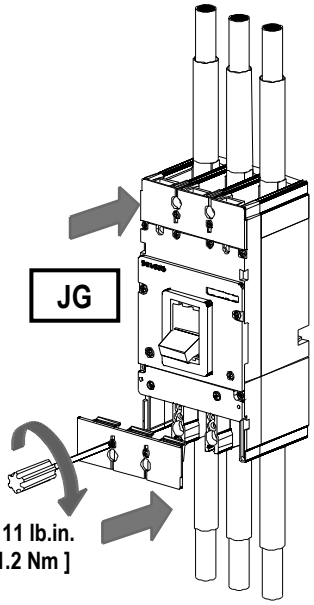

For Support in Europe refer to :

Bestell-Nr. / Order No.: 3ZX1012-0VL68-3AA5 Internet: www.siemens.de/lowvoltage/technical-assistance **GWA 4NEB 179 6855-10 DS 04**

Technical Support: Toll Free: 1-800-964-4114 Internet: www.sea.siemens.com

© Siemens Energy & Automation Inc. 2006