SIEMENS

Combination Starters, Classes 17, 18, 25, 26 and 32

Starter Sizes 0 - 4

Replacement Parts and Instruction Guide

E87010-A0137-T003-A4
August 2020
Supersedes Issue of
June 2015

IMPORTANT

THESE INSTRUCTIONS DO NOT PURPORT TO COVER ALL DETAILS OR VARIATIONS IN EQUIPMENT, NOR TO PROVIDE FOR EVERY POSSIBLE CONTINGENCY TO BE MET IN CONNECTION WITH INSTALLATION, OPERATION OR MAINTENANCE. SHOULD FURTHER INFORMATION BE DESIRED OR SHOULD PARTICULAR PROBLEMS ARISE WHICH ARE NOT COVERED SUFFICIENTLY FOR THE PURCHASER'S PURPOSES, THE MATTER SHOULD BE REFERRED TO THE LOCAL SIEMENS SALES OFFICE.

THE CONTENTS OF THIS INSTRUCTION MANUAL SHALL NOT BECOME PART OF OR MODIFY ANY PRIOR OR EXISTING AGREEMENT, COMMITMENT OR RELATIONSHIP. THE SALES CONTRACT CONTAINS THE ENTIRE OBLIGATION OF SIEMENS. THE WARRANTY CONTAINED IN THE CONTRACT BETWEEN PARTIES IS THE SOLE WARRANTY OF SIEMENS. ANY STATEMENTS CONTAINED HEREIN DO NOT CREATE NEW WARRANTIES OR MODIFY THE EXISTING WARRANTY.



⚠ DANGER

Hazardous voltage.
Will cause death, serious personal injury, or property damage.
Always de-energize and ground the equipment before maintenance. Read and understand this manual before installing, operating or maintaining the equipment. Maintenance should be performed only by qualified personnel. The use of unauthorized parts in the repair of the equipment or tampering by unqualified personnel may result in dangerous conditions which may cause death or serious personal injury or equipment or property damage. Follow all safety instructions contained herein.

WARNING

Short-Circuit Explosion Hazard. Can cause death, serious personal injury, or property damage. Fully engage all door latches and spread ends of door hinge pins approximately 45 degrees before energizing equipment.



SIGNAL WORDS

The signal words **"Danger"**,**"Warning"** and **"Caution"** used in this manual indicate the degree of hazard that may be encountered by the user.
These words are defined as below:

Danger - Indicates death, severe personal injury or property damage will result if proper precautions are not taken.

Warning - Indicates death, severe personal injury, or property damage can result if proper precautions are not taken.

Caution - Indicates personal injury or property damage may result if proper precautions are not taken.

QUALIFIED PERSON

For the purpose of this manual and product labels a qualified person is one who is familiar with the installation, construction, operation, or maintenance of the equipment and the hazards involved. In addition this person has the following qualifications:

(a) is trained and authorized to energize, de-energize, clear, ground, and tag circuits and equipment in accordance with established safety practices.

(b) is trained in the proper care and use of protective equipment such as rubber gloves, hard hat, safety glasses or face shields, flash clothing, etc., in accordance with established safety practices.

(c) is trained in rendering first aid.

Replacement Parts

A. Disconnect or Circuit Breaker Disconnect Switch Type Selection

Disconnect Size/Amps	Disconnect Switch (No Fuse Clips)	Disconnect Switch (With Fuse Clips)
30A/250V	HNB612	HFB21
30A/600V	HNB612	HFB612
60A/250V	HNB623	HFB22
60A/600V	HNB623	HFB62
100A/250V/600V	HNB623	HFB63
200A/250V/600V	HNB64	HFB64

Disconnect Fuse Clip Ampere Rating	3-Pole Class R Fuse Clip Kit Catalog Number	
	250 Volts	600 Volts
30	HBB21 + HR21	HBB612 + HR612
60	HBB22 + HR612	HBB62 + HR62
100	HBB63 + HR63	HBB63 + HR63
200	HBB64 + HR64	HBB64 + HR64

Disconnect Fuse Clip Ampere Rating	Type J Fuse Clip Kit Catalog Number	
	250 Volts	600 Volts
30	N/A	HBB612
60	N/A	HBB62
100	N/A	HBB63
200	N/A	HBB64

Circuit Breaker Type Section:

Ratings (Amps)	Catalog Number
3	ED63A003
10	ED63A010
25	ED63A025
30	ED63A030
50	ED63A050
100	ED63A100
125	ED63A125
150	FXD63A150L

B1. Disconnect Switch Handle and Mechanism (Class 17, 25 & 32) * *

Enclosure Type 1, 3R, 4, 4X* & 12

Disconnect Size (Amps)	Enclosure Size	Handle Assembly Only	Handle Assembly & Disc. Mech.
30, 60, 100	All Standard and Extra-Wide Sizes	75D73944015	75D768257103
200	All Standard and Extra-Wide Sizes	75D73944015	75D768257105

B2. Circuit Breaker Handle and Mechanism (Class 18, 26 & 32) * *

Enclosure Type 1, 3R, 4, 4X* & 12

Circuit Breaker Size (Amps)	Enclosure Size	Handle Assembly Only	Handle Assembly & Disc. Mech.
3 - 125	(24"H x 11"W x 8"D) & (24"H x 20"W x 8" D)	75D73944025	75D68257080
100 -125	(36"H x 24"W x 8"D)	75D73944025	75D68257073
150 - 250	All Standard Sizes	75D73944028	75D68257089

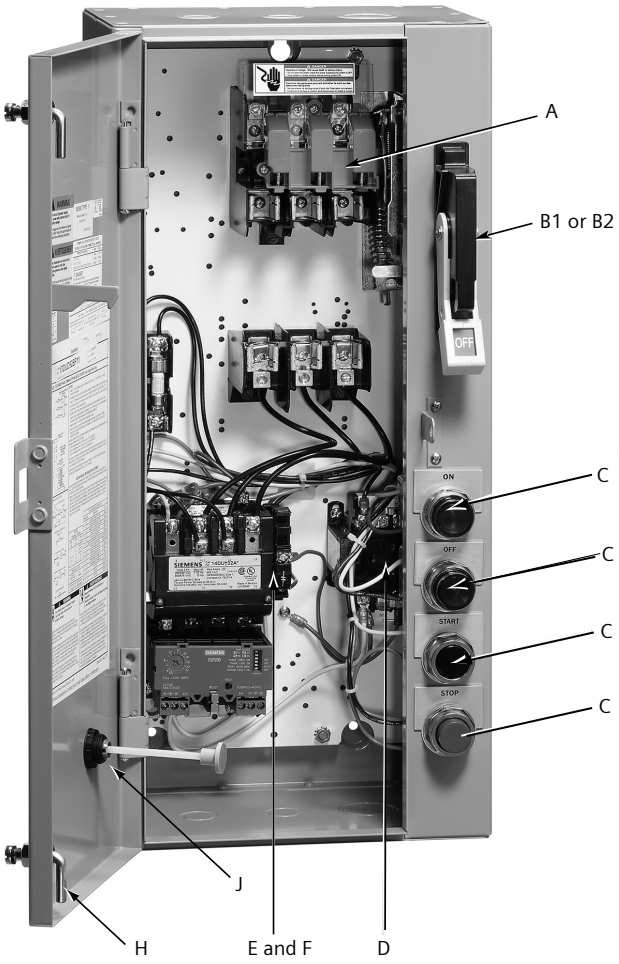

* Type 4X stainless steel only. Does not include fiberglass type enclosures.
** For installation instructions see pages 7 & 8.

Replacement Parts

C. Pilot Devices

Push Buttons/ Selector Switches	Factory Suffix	Field Kit
Start-Stop Push Button	A1	49SAP05
For-Rev-Stop Push Button	A2	49SAP02
High-Low-Stop	A2	49SAP03
H-O-A Selector Switch	A3	49SAS01
OFF/ON Selector Switch	A4	49SAS04
For-Off-Rev Selector Switch	A5	49SAS02
High-Off-Low Selector Switch	A5	49SAS03
Keyed H-O-A Selector Switch	A9	49SAS09

Pilot Lights

Pilot Light Kit Voltages: E-600V, F-120V, G-240V, H-480V, J-24V	Factory Suffix	Field Kit
Pilot Light Red "ON"	FA	49SPL0BR(E,F,G,H,J)
Pilot Light Green "ON"	FB	49SPL0BG(E,F,G,H,J)
Pilot Light Red "Run"	FC	49SPL0CR(E,F,G,H,J)
Pilot Light Green "Run"	FD	49SPL0CG(E,F,G,H,J)
Pilot Light Red "Off"	FJ	49SPL0AR(E,F,G,H,J)
Pilot Light Green "Off"	FK	49SPL0AG(E,F,G,H,J)
Push-to-Test Red "ON"	FS	49SPLPBR(E,F,G,H,J)
Push-to-Test Green "ON"	FT	49SPLPBG(E,F,G,H,J)
Push-to-Test Green "Off"	FU	49SPLPAG(E,F,G,H,J)
Pilot Light White "Control Power On"	FW	49SPL0DW(E,F,G,H,J)
OL Relay Trip Alarm Light - Amber	FL	49SPL0EA(E,F,G,H,J)

D. Control Power Transformers

Control Power Transformers Standard Capacity:	Sizes 0 - 2.5	Sizes 3 - 3.5	Size 4
208/120V	KTH050	KTH100	KTH150
208/24V	KTG050	KTG100	KTG150
240/120V	KT8050	KT8100	KT8150
277/120V	KT7050	KT7100	KT7150
277/24V	KT5050	KT5100	KT5150
480/120V	KT8050	KT8100	KT8150
480/24V	KT4050	KT4100	KT4150
600/120V	KT9050	KT9100	KT9150
600/24V	KT6050	KT6100	KT6150

KT__ 50 is 45VA (primary fusing not required)
KT__ 100 is 100VA (with primary fusing)
KT__ 150 is 150VA (with primary fusing)

E. Motor Starter or Contactor

See device label for appropriate replacement parts sheet.

F. Auxiliary Contacts - Not Shown

Auxiliary Contacts (Installed on contactor)	Factory Suffix	Field Kit
1NO	G10	1-49AB10
2NO	G20	1-49AB20
3NO	G30	1-49AB20 + 1-49AB10
4NO	G40	1-49AB40
1NC	G01	1-49AB01
2NC	G02	2-49AB01
1NO & 1NC	G11	1-49AB11
1NO & 2NC	G12	1-49AB12
2NO & 1NC	G21	1-49AB21
2NO & 2NC	G22	1-49AB22
2NO & 1NC	G31	1-49AB31

G. Control Options - Not Shown

Control Options	Factory Suffix	Field Kit
Disconnect switch interlock 2NO/2NC 30 - 200A	GY	HA261234
Ground Lug 3-Conductor	L10	75D28182001
120V Coil Transient Suppressor - Per Coil	SS	49D26344

Control Relays	Factory Suffix	Field Kit
Relay 2NO & 2NC (120V)	R22	3RH2122-1AK60
Relay 4NO (120V)	R40	3RH2140-1AK60
Relay 4NC (120V)	R04	3RH2122-1AK60

H. Quarter-Turn Latch

Enclosure Type	Catalog Number
1, 3R, 12	75D46260004
4, 4X	75D46260005

J. Overload Relay Reset Operator

Enclosure Type	Catalog Number
1	49MBRS1
3R, 4, 4X, 12	49MBRS2

Instruction Guide

Disconnect Handle Replacement Diagram

NOTE:
Not typical for all size switches

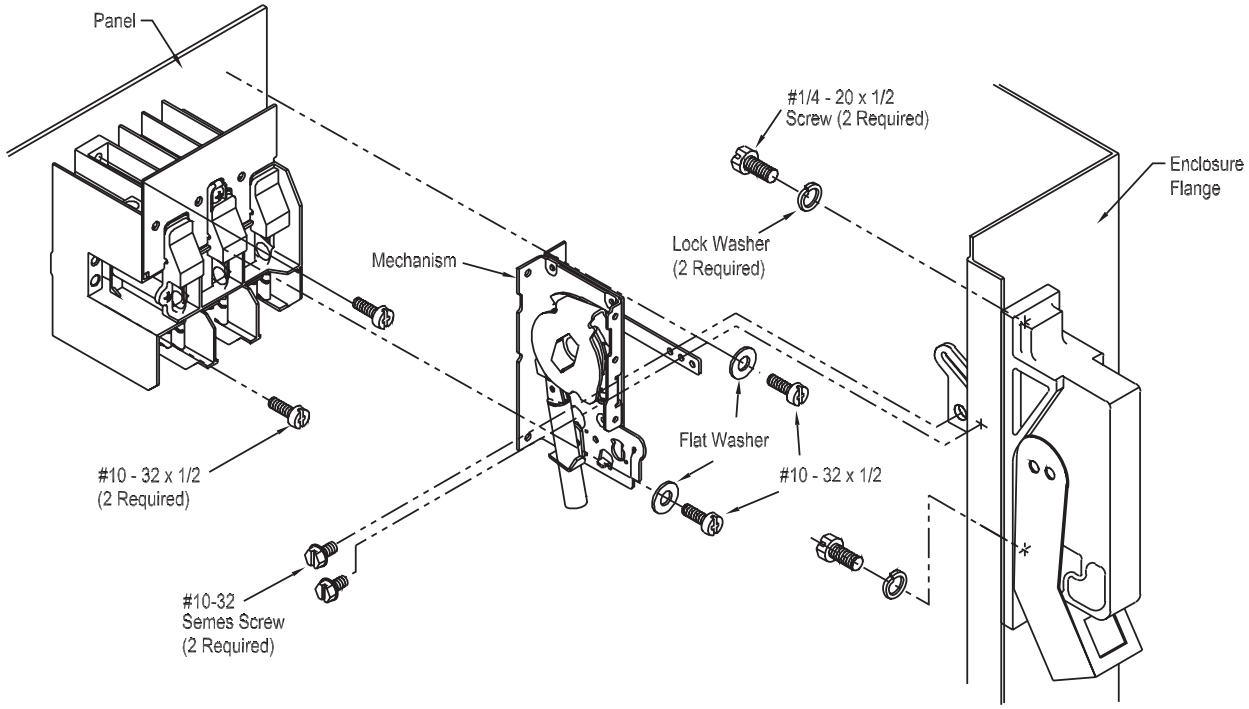

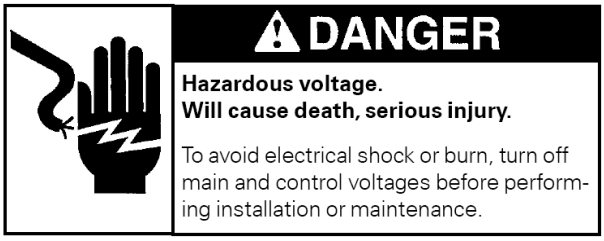

Circuit Breaker Assembly Instructions

1. Remove the (2) screws from the connecting link.
2. Use a 5/16” wrench to remove the two 1/4-20 screws and lock washers which secure the handle to the enclosure flange. These screws are located on the underside of the enclosure flange. Remove the old handle assembly from the enclosure.
3. Remove the mechanism from the panel and replace it with the one provided. The mounting panel may need to be removed to access the mounting screws.
4. Hardware has been provided to mount a new disconnect switch if necessary.
5. Install the new handle assembly onto the enclosure.
6. Reinstall the two 1/4-20 screws and lock washers. Make sure the handle housing is sealed against the enclosure flange as this prevents the entry of moisture.
7. Reinstall the connecting pin and retaining ring that connect the handle link to the mechanism. The retaining ring should not spin freely on the shaft after it is installed.
8. No handle adjustment is required.
9. Verify that the handle mechanism turns ‘ON’ and ‘OFF’ the circuit breaker.
10. Verify that the door cannot be opened with the handle in the ‘ON’ position.

Instruction Guide

Circuit Breaker Handle Replacement Diagram *

Notes: Toggle on circuit breaker must fit through notch in pivot assembly.

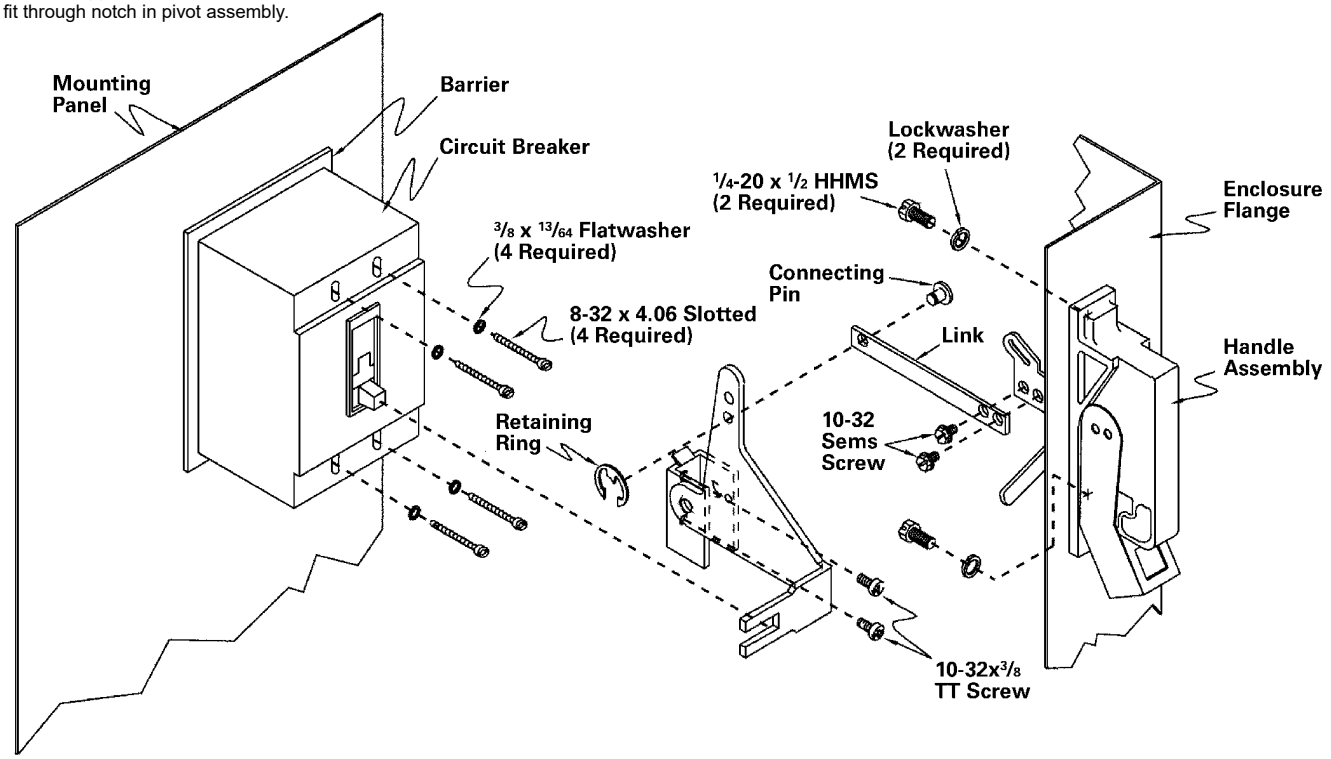

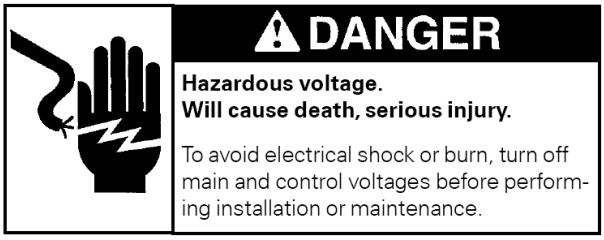

Circuit Breaker Assembly Instructions

1. Remove the two screws that connect the handle link to the pivot assembly.
2. Use a 5/16” wrench to remove the two 1/4-20 screws and lock washers which secure the handle to the enclosure flange. These screws are located on the underside of the enclosure flange. Remove the old handle assembly from the enclosure.
3. Remove the lever assembly from the panel and replace it with one provided. The mounting panel may need to be removed to access the mounting screws.
4. Hardware has been provided to mount a new circuit breaker if necessary.
5. Install the new handle assembly onto the enclosure.
6. Reinstall the two 1/4-20 screws and lock washers. Make sure the handle housing is sealed against the enclosure flange as this prevents the entry of moisture.
7. Reinstall the two screws that connect the handle link to the pivot assembly.
8. No handle adjustment is required.
9. Verify that the handle mechanism turns ‘ON’ and ‘OFF’ the circuit breaker.
10. Manually trip the circuit breaker and verify that the handle will reset the breaker.
11. Verify that the door cannot be opened with the handle in the ‘ON’ position.

* Diagram applies to size 3.5 or 4 starters with E or F frame breaker

Instruction Guide

Circuit Breaker Handle Replacement Diagram *

Notes: Toggle on circuit breaker must fit through notch in pivot assembly.

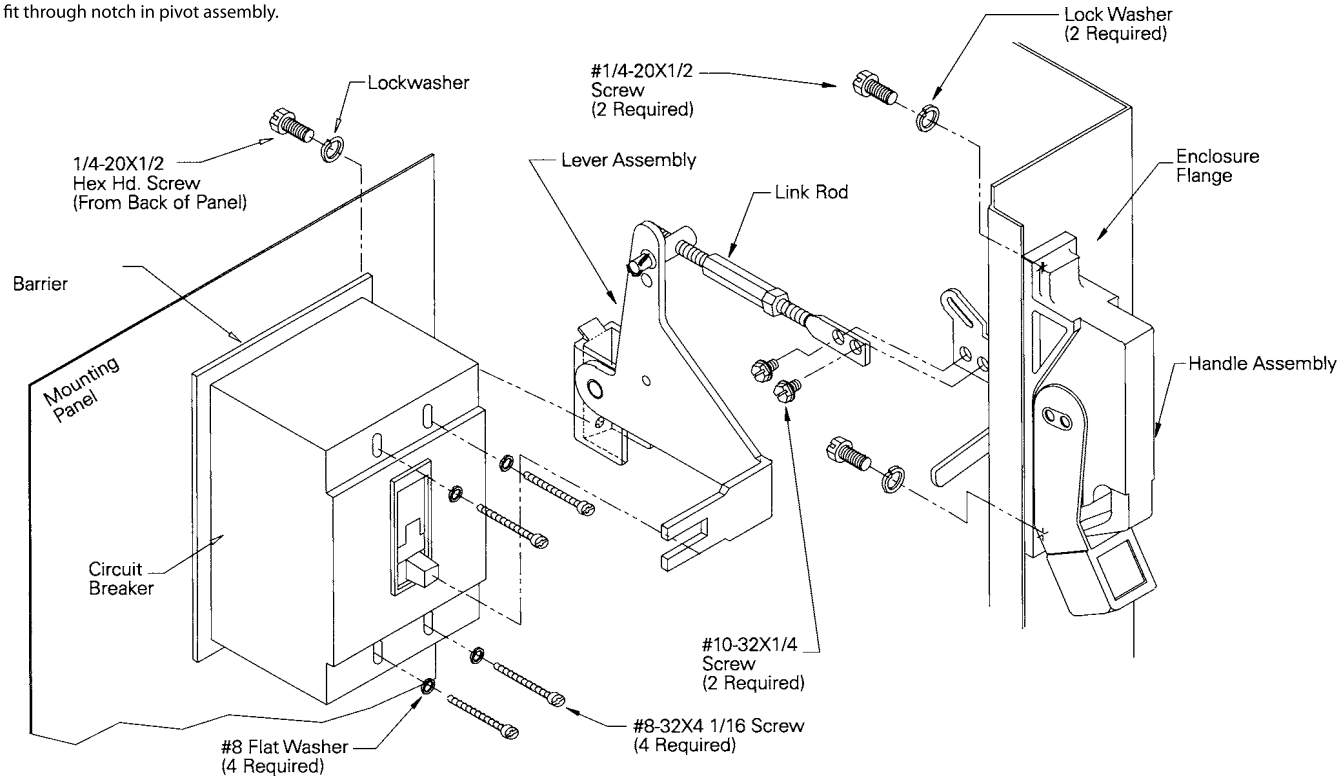

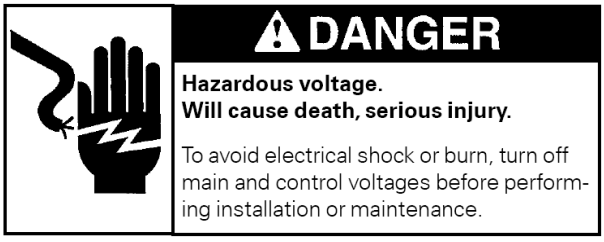

Circuit Breaker Assembly Instructions

1. Remove the two screws that connect the handle link to the pivot assembly.
2. Use a 5/16” wrench to remove the two 1/4-20 screws and lock washers which secure the handle to the enclosure flange. These screws are located on the underside of the enclosure flange. Remove the old handle assembly from the enclosure.
3. Remove the lever assembly from the panel and replace it with one provided. The mounting panel may need to be removed to access the mounting screws.
4. Hardware has been provided to mount a new circuit breaker if necessary.
5. Install the new handle assembly onto the enclosure.
6. Reinstall the two1/4 -20 screws and lock washers. Make sure the handle housing is sealed against the enclosure flange as this prevents the entry of moisture.
7. Reinstall the two screws that connect the handle link to the pivot assembly.
8. No handle adjustment is required.
9. Verify that the handle mechanism turns ‘ON’ and ‘OFF’ the circuit breaker.
10. Manually trip the circuit breaker and verify that the handle will reset the breaker.
11. Verify that the door cannot be opened with the handle in the ‘ON’ position.

* Diagram applies to size 3.5 or 4 starters with E or F frame breaker