SIEMENS

# SIMATIC

# ET 200SP HA
# AI 16xI 2-wire HA

**Equipment Manual**


Security information 1

Preface 2

Product overview 3

Terminal 4

Parameters 5

Displays and interrupts 6

Technical specifications 7

Drivers, parameters, diagnostics messages and address space A

Analog value display B



6DL1134-6GH00-0PH1

**03/2023**
A5E52079029-AA

## Legal information

### Warning notice system

This manual contains notices you have to observe in order to ensure your personal safety, as well as to prevent damage to property. The notices referring to your personal safety are highlighted in the manual by a safety alert symbol, notices referring only to property damage have no safety alert symbol. These notices shown below are graded according to the degree of danger.

**⚠ DANGER**

indicates that death or severe personal injury **will** result if proper precautions are not taken.

**⚠ WARNING**

indicates that death or severe personal injury **may** result if proper precautions are not taken.

**⚠ CAUTION**

indicates that minor personal injury can result if proper precautions are not taken.

**NOTICE**

indicates that property damage can result if proper precautions are not taken.

If more than one degree of danger is present, the warning notice representing the highest degree of danger will be used. A notice warning of injury to persons with a safety alert symbol may also include a warning relating to property damage.

### Qualified Personnel

The product/system described in this documentation may be operated only by **personnel qualified** for the specific task in accordance with the relevant documentation, in particular its warning notices and safety instructions. Qualified personnel are those who, based on their training and experience, are capable of identifying risks and avoiding potential hazards when working with these products/systems.

### Proper use of Siemens products

Note the following:

**⚠ WARNING**

Siemens products may only be used for the applications described in the catalog and in the relevant technical documentation. If products and components from other manufacturers are used, these must be recommended or approved by Siemens. Proper transport, storage, installation, assembly, commissioning, operation and maintenance are required to ensure that the products operate safely and without any problems. The permissible ambient conditions must be complied with. The information in the relevant documentation must be observed.

### Trademarks

All names identified by ® are registered trademarks of Siemens AG. The remaining trademarks in this publication may be trademarks whose use by third parties for their own purposes could violate the rights of the owner.

### Disclaimer of Liability

We have reviewed the contents of this publication to ensure consistency with the hardware and software described. Since variance cannot be precluded entirely, we cannot guarantee full consistency. However, the information in this publication is reviewed regularly and any necessary corrections are included in subsequent editions.

Siemens AG
Digital Industries
Postfach 48 48
90026 NÜRNBERG
GERMANY

A5E52079029-AA
Ⓟ 04/2023 Subject to change

Copyright © Siemens AG 2023.
All rights reserved

# Table of contents


**1 Security information ..... 5**

**2 Preface ..... 7**

**3 Product overview ..... 9**

3.1 I/O module ..... 9

3.2 Accessories ..... 10

3.3 Terminal blocks ..... 11

**4 Terminal ..... 13**

4.1 Terminal assignment ..... 13

4.2 Example of a connection scheme for 2-wire connector of a transmitter ..... 14

4.3 Example of connection scheme for non-isolated connector of a 4-wire transmitter ..... 14

4.4 Schematic circuit diagram ..... 15

**5 Parameters ..... 17**

5.1 Configuration options ..... 17

5.2 Parameter types ..... 17

5.3 Module/channel parameters ..... 17

5.4 Explanation of the module/channel parameters ..... 19
5.4.1 Diagnostics, Missing supply voltage L+ ..... 19
5.4.2 Potential group ..... 19
5.4.3 Measurement types and measuring ranges ..... 20
5.4.4 Diagnostics overflow ..... 20
5.4.5 Diagnostics underflow ..... 21
5.4.6 Diagnostics, Wire break ..... 21
5.4.7 Smoothing ..... 21
5.4.8 Interference frequency suppression ..... 22
5.4.9 Failure monitoring according to NE43 ..... 22
5.4.10 Wire break limit ..... 23

**6 Displays and interrupts ..... 25**

6.1 Status and error displays ..... 25

6.2 LEDs ..... 26
6.2.1 DIAG LED ..... 26
6.2.2 MT LED ..... 26
6.2.3 Channel status / fault LEDs ..... 27
6.2.4 PWR LED ..... 27

6.3 Interrupts ..... 27

**7 Technical specifications ..... 29**
**A Drivers, parameters, diagnostics messages and address space ..... 37**
A.1 Parameter assignment ..... 37
A.2 Parameter assignment and structure of the module/channel parameters ..... 38
A.3 Diagnostics alarms ..... 41
A.4 Maintenance events ..... 42
A.5 Address space ..... 43
**B Analog value display ..... 45**
B.1 Analog value display in the current measurement range 0 to 10 mA ..... 45
B.2 Analog value display in the current measurement range 0 to 20 mA ..... 45
B.3 Analog value display with failure monitoring in current measuring range 4...20 mA ..... 46
B.4 Analog value display without failure monitoring in current measuring range 4...20 mA ..... 47

# Security information

# 1

Siemens provides products and solutions with industrial security functions that support the secure operation of plants, systems, machines and networks.

In order to protect plants, systems, machines and networks against cyber threats, it is necessary to implement – and continuously maintain – a holistic, state-of-the-art industrial security concept. Siemens' products and solutions constitute one element of such a concept.

Customers are responsible for preventing unauthorized access to their plants, systems, machines and networks. Such systems, machines and components should only be connected to an enterprise network or the internet if and to the extent such a connection is necessary and only when appropriate security measures (e.g. firewalls and/or network segmentation) are in place.

For additional information on industrial security measures that may be implemented, please visit
https://www.siemens.com/industrialsecurity.

Siemens' products and solutions undergo continuous development to make them more secure. Siemens strongly recommends that product updates are applied as soon as they are available and that the latest product versions are used. Use of product versions that are no longer supported, and failure to apply the latest updates may increase customer's exposure to cyber threats.

To stay informed about product updates, subscribe to the Siemens Industrial Security RSS Feed under
https://www.siemens.com/cert.

# Preface

2

## Validity of the documentation

This manual describes the I/O module AI 16xI 2-wire HA with Article No. 6DL1134-6GH00-0PH1.

It supplements the "ET 200SP HA Distributed I/O System" system manual.

Functions that generally relate to the system are described in this manual.

The information in this manual and in the system and function manuals enables you to commission the ET 200SP HA.

## Conventions

Please also observe notes marked as follows:

**Note**

A note contains important information on the product described in the documentation, on the handling of the product and on the section of the documentation to which particular attention should be paid.

# Product overview

# 3

## 3.1 I/O module

### Definition

The I/O module AI 16xI 2-wire HA is an analog input module with 16 current inputs for process control.

In addition to the technical specifications, this module has the following properties:

- The analog inputs have the following channel-specific configurable properties:
  - Type of current measurement for 2-wire transducer
  - Measuring ranges 0 to 20 mA, 0 to 10 mA and 4 to 20 mA
  - Resolution dependent on measuring range and interference frequency suppression, minimum 15 bits including sign, maximum 16 bits including sign
  - Compatibility of the HART protocol
- Configurable failure monitoring (according to NE43)
- Module-specific configurable diagnostics for missing supply voltage L+
- Value status QI

### Description

The I/O module consists of the following components:

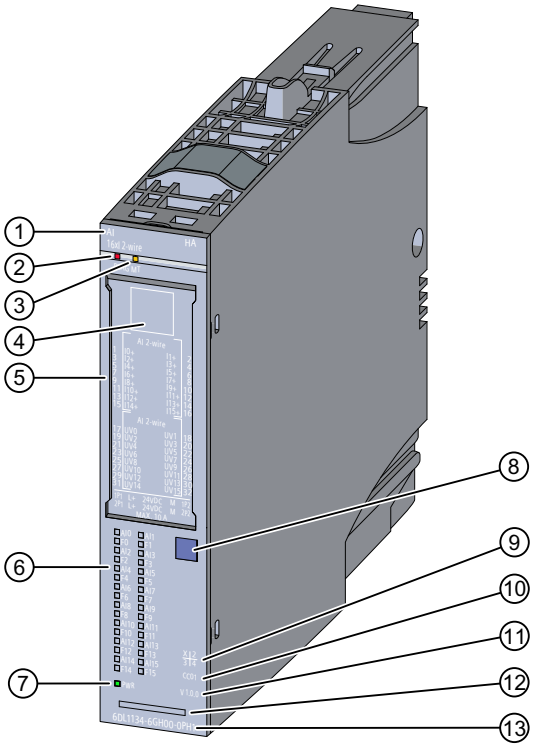


1. Module type and designation
2. LED for diagnostics
3. LED for maintenance
4. 2D matrix code
5. Wiring diagram
6. LEDs for channel status/channel fault
7. LED for supply voltage
8. Module type color coding
9. Product version
10. Function status and firmware version
11. Color code for selection of the color-coded labels
12. Serial number
13. Article number

## 3.2 Accessories

### Definition

Accessories for the I/O module must be ordered separately.

### Description

The following accessories must be ordered separately:

- Labeling strips
- Color-coded labels

- Reference identification label
- Shield connector

## 3.3 Terminal blocks

### Definition

The terminal blocks provide the process terminals (push-in terminals) for components such as devices to be connected.

**Note**

Terminal blocks are not included in the scope of delivery of the I/O module and must be ordered separately.

Refer to the System Manual for the terminal blocks available for the I/O module and more information on configuration.

# Terminal

# 4

## 4.1 Terminal assignment

### Definition

The terminal assignment provides information about the arrangement and marking of the terminals when wiring a connector.

### Description

The general terminal assignment is structured as follows:

| Terminal | Assignment | Terminal | Assignment | Explanations |
|---|---|---|---|---|
| **1** | $I_0$+ | **2** | $I_1$+ | Terminal 1 to 16: |
| **3** | $I_2$+ | **4** | $I_3$+ | $I_n$+: Input signal "+", channel n |
| **5** | $I_4$+ | **6** | $I_5$+ | Terminal 17 to 32: |
| **7** | $I_6$+ | **8** | $I_7$+ | $U_{Vn}$: Sensor supply channel n |
| **9** | $I_{8+}$ | **10** | $I_{9+}$ | M: Reference point, ground |
| **11** | $I_{10+}$ | **12** | $I_{11+}$ | |
| **13** | $I_{12+}$ | **14** | $I_{13+}$ | 1P1: Supply voltage L+ of the voltage bus 1P |
| **15** | $I_{14+}$ | **16** | $I_{15+}$ | 2P1: Supply voltage L+ of the voltage bus 2P |
| **17** | $U_{V0}$ | **18** | $U_{V1}$ | 1P2: Ground reference of the voltage bus 1P |
| **19** | $U_{V2}$ | **20** | $U_{V3}$ | 2P2: Ground reference of the voltage bus 2P |
| **21** | $U_{V4}$ | **22** | $U_{V5}$ | |
| **23** | $U_{V6}$ | **24** | $U_{V7}$ | |
| **25** | $U_{V8}$ | **26** | $U_{V9}$ | |
| **27** | $U_{V10}$ | **28** | $U_{V11}$ | |
| **29** | $U_{V12}$ | **30** | $U_{V13}$ | |
| **31** | $U_{V14}$ | **32** | $U_{V15}$ | |
| **1P1** | L+ | **1P2** | M | |
| **2P1** | L+ | **2P2** | M | |

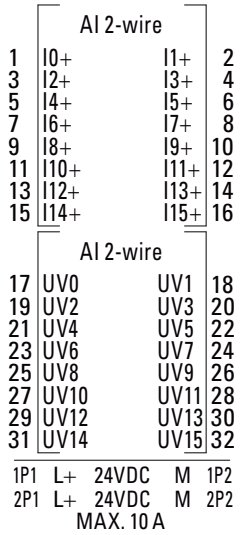

## 4.2 Example of a connection scheme for 2-wire connector of a transmitter

### Example

The following view shows a 2-wire connector of a transmitter at channel 0 as an example.

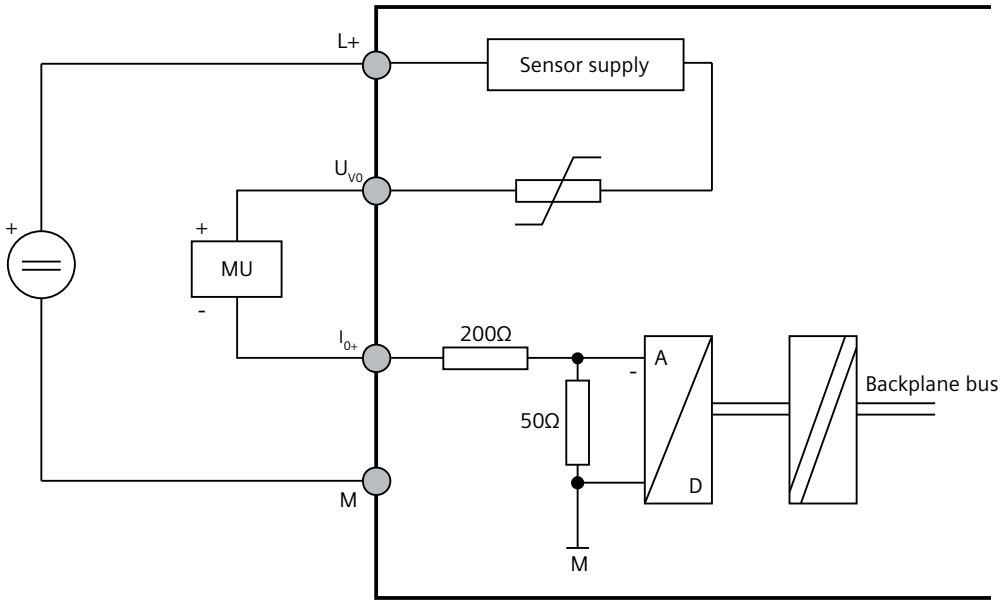


## 4.3 Example of connection scheme for non-isolated connector of a 4-wire transmitter

### Example

You can also supply the 4-wire transmitter via the encoder supply terminal $U_{V0}$. Reference potential of the supply is M.

The following view shows a 4-wire connector of a transmitter at channel 0 as an example.

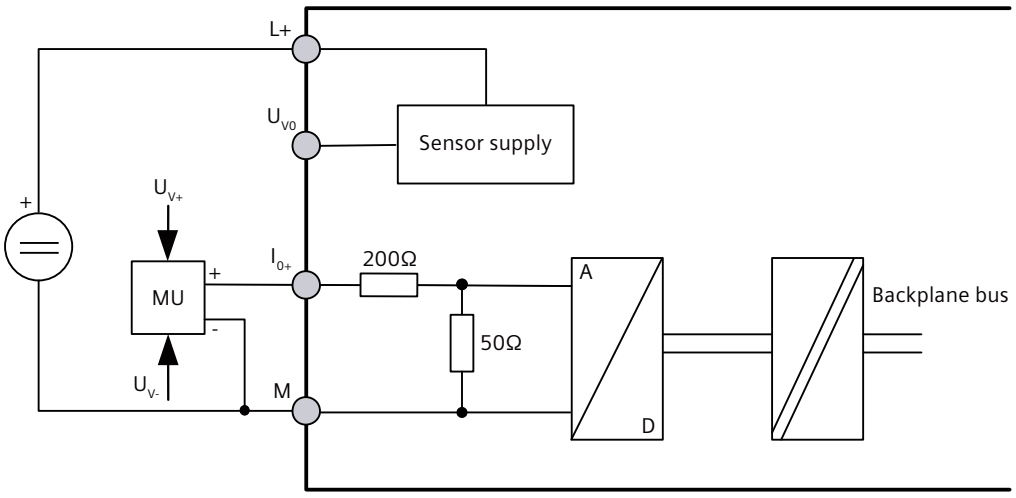


## 4.4 Schematic circuit diagram

### Definition

A block diagram contains the schematic representation of individual function blocks.

## Description

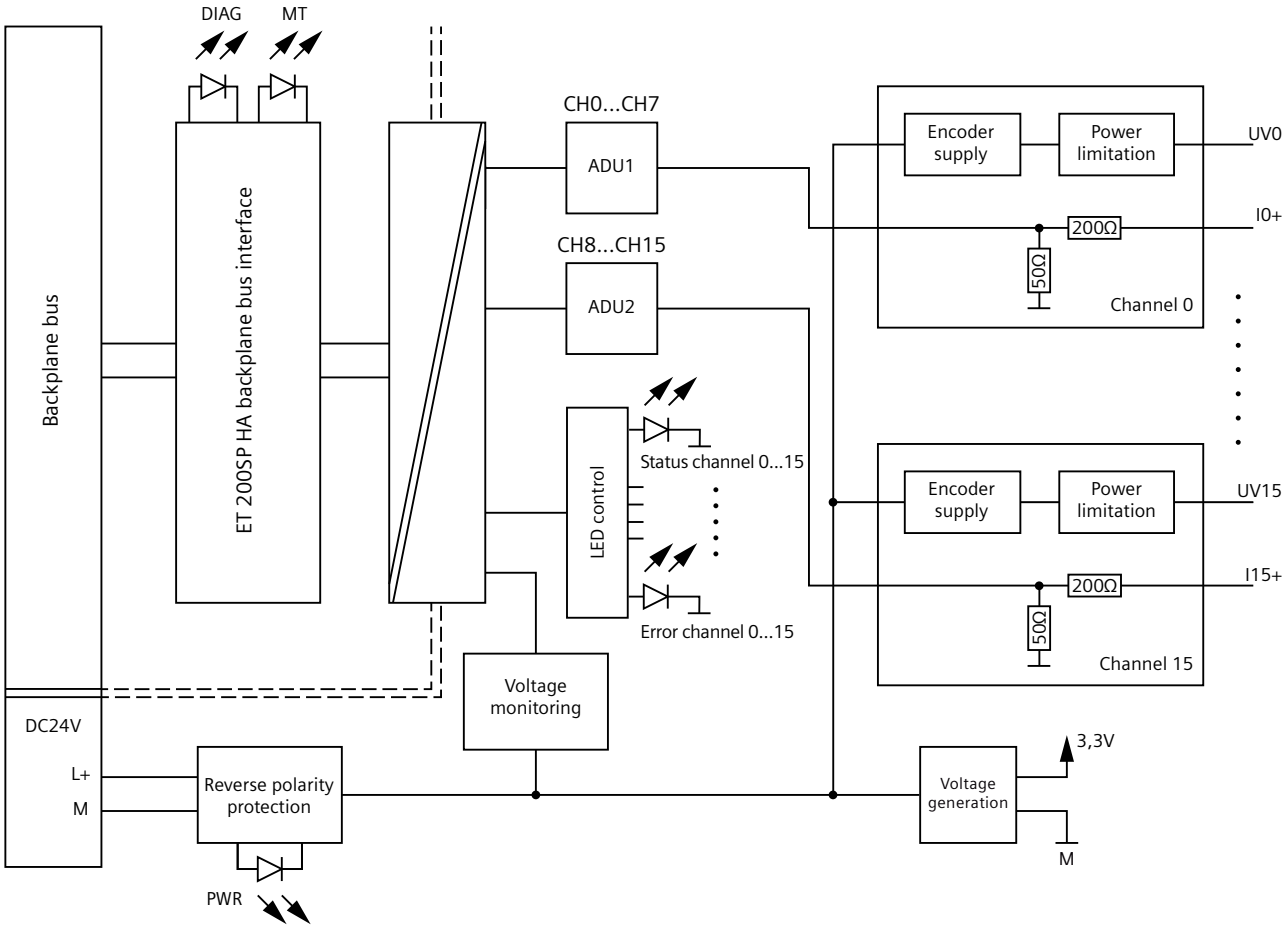


## Supply voltage L+/M

Connect the supply voltage L+ to the L+ and M terminals. An internal protective circuit protects the I/O module from reverse polarity. The I/O module monitors whether the supply voltage is connected and present.

## Sensor supply

**Note**

The use of the encoder supply UV0...UV15 is only permitted for the use of the module's own channels.

## Firmware update

The supply voltage L+ must be available on the I/O module at the start of firmware updates and during the update.

# Parameters

# 5

## 5.1 Configuration options

### Definition

The selected configuration determines the scope of the input and output address areas that are used in the I/O system.

### Description

There is only one configuration consisting of value status and process data.

## 5.2 Parameter types

### Definition

You define operation of the I/O module and thereby influence the functions supported by the module via the parameter types.

### Description

There are two types of parameters:

- Module/channel parameters (data record 128)
- System parameters (potential group)

**Note**

With the exception of parameter assignment of the potential group, all parameters can be changed when the CPU is in RUN.

## 5.3 Module/channel parameters

### Definition

Module/channel parameters are specific parameters whose configuration can affect the entire module or the channels.

## Description

The following module/channel parameters are available:

| Parameters | Value range | Default | Parameter reassignment in RUN | Efficiency range |
|---|---|---|---|---|
| Diagnostics, Missing supply voltage L+ (Page 19) | • Enabled<br>• Disabled | Enabled | Yes | Module |
| Potential group (Page 19) | • Potential group of the left module (dark gray terminal block)<br>• New potential group (light gray terminal block)<br>• No potential group (black terminal block) | Use potential group of the left module | No | Module |
| Measurement type (Page 20) | • Disabled<br>• Current (2-wire transducer) | Current (2-wire transducer) | Yes | Channel |
| Measuring range (Page 20) | • 0 to 10 mA<br>• 0 to 20 mA<br>• 4 to 20 mA<br>There is no underrange in the ranges 0 to 10 mA or 0 to 20 mA That is, the smallest analog value is zero. | 4 to 20 mA | Yes | Channel |
| Diagnostics overflow (Page 20) | • Enabled<br>• Disabled | Enabled | Yes | Channel |
| Diagnostics underflow (Page 21) | • Enabled<br>• Disabled | Enabled | Yes | Channel |
| Diagnostics, Wire break (Page 21) | • Enabled<br>• Disabled | Enabled | Yes | Channel |
| Smoothing (Page 21) | • None<br>• Weak<br>• Medium<br>• Strong | None | Yes | Channel |

| Parameters | Value range | Default | Parameter reassignment in RUN | Efficiency range |
|---|---|---|---|---|
| Interference frequency suppression (Page 22) | • 60 Hz (integration time 16.6 ms)<br>• 50 Hz (integration time 20 ms)<br>• 10 Hz (integration time 100 ms)<br>When 50 Hz is set, the interference signals of 400 Hz are also filtered automatically. | 50 Hz | Yes | Channel |
| Failure monitoring according to NE43 (Page 22) | • Enabled<br>• Disabled | Disabled | Yes | Channel |

**Note**

**Unused channels**

"Disable" unused channels in the parameter assignment to improve the cycle time of the module.

A disabled channel always supplies the analog value $7FFF_H$.

## 5.4 Explanation of the module/channel parameters

### 5.4.1 Diagnostics, Missing supply voltage L+

#### Definition

Enabling of the diagnostics for missing or insufficient supply voltage L+.

### 5.4.2 Potential group

#### Definition

A potential group consists of a group of directly adjacent I/O modules within an ET 200SP HA station that are supplied via a common supply voltage.

#### Description

A potential group is built up from left to right by using terminal blocks.

A new potential group starts on the left side with a light gray terminal block, via which the supply voltage for the potential group is fed in.

The potential group is continued to the right with dark gray terminal blocks and ends when a new potential group is built up next to it.

The potential group also ends if there is a black terminal block next to it. Black terminal blocks are fed individually and cannot be included in potential groups.

You can find additional information on the configuration of the potential group in the system manual *SIMATIC; Distributed I/O System; ET 200SP HA*.

## 5.4.3 Measurement types and measuring ranges

### Definition

With the measurement type, a current measurement type is selected, or a channel is disabled.

You can choose between different measuring ranges with an active channel.

An overview of the measuring range and the overflow, overrange, etc. can be found in section Analog value display (Page 45).

### Description

The I/O module supports the following measuring ranges:

| Measurement type | Measuring range | Resolution for interference frequency suppression | | |
|---|---|---|---|---|
| | | 10 Hz | 50 Hz | 60 Hz |
| Disabled | -- | -- | -- | -- |
| Current (2-wire transducer) | 0 to 10 mA | 16 bits including sign | 16 bits including sign | 16 bits including sign |
| | 0 to 20 mA | | | |
| | 4 to 20 mA | | | |

## 5.4.4 Diagnostics overflow

### Definition

Enabling of the diagnostics for overrange.

The current output is also limited to the end of the overrange if the overrange is exceeded.

### 5.4.5 Diagnostics underflow

#### Definition

You can enable an underflow diagnostics for measuring range 4 to 20 mA. The diagnostics will only respond if all of the following conditions are met:

- "Wire break" parameter is deactivated.
- "Underflow" parameter is activated.
- The measured value reaches the underflow. The underrange range or nominal range has been undershot.

There is no underflow in the ranges 0 to 20 mA or 0 to 10 mA.

### 5.4.6 Diagnostics, Wire break

#### Definition

You can enable a wire break diagnostics for measuring range 4 to 20 mA. The diagnostics is triggered when the current flow falls below the value for the specific measuring range.

Note the dependency on the enabling of the failure monitoring according to NE43.

If you enable wire break and underflow diagnostics simultaneously, the wire break diagnostic is output.

### 5.4.7 Smoothing

#### Definition

Compensates for measured value fluctuations.

The individual measured values are smoothed by filtering.

#### Description

Smoothing can be set in 4 levels.

Smoothing time = number of module cycles (k) x cycle time of the module.

The following figure shows how many module cycles it takes for the smoothed analog value to approach 100%, depending on the configured smoothing. This applies to every signal change at the analog input.

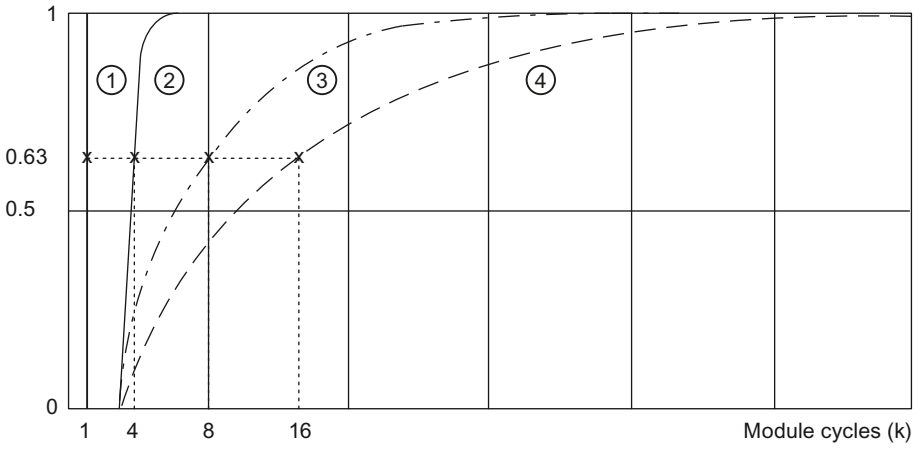


① No smoothing (k = 1)
② Weak (k = 4)
③ Medium (k = 8)
④ Strong (k = 16)

## 5.4.8 Interference frequency suppression

### Definition

Suppresses the interference that is caused by the frequency of the AC voltage network used.

## 5.4.9 Failure monitoring according to NE43

### Definition

The failure monitoring according to NE43 can only be enabled for measuring range 4…20 mA.

Enabling the failure monitoring changes the settings for monitoring the analog value.

- Disabled
  The limits according to the system specifications apply to the monitoring of the analog value.
- Enabled
  The limits for monitoring the analog value according to NE43

Analog value display (Page 45)

### Description

- If failure monitoring is enabled, the following applies to the measuring range:
  3.6 mA < valid measuring range (nominal range) < 21 mA
  - Hysteresis at the upper end of the measuring range (detection "Overflow/nominal range"):
    - The analog value is invalid as of 21 mA.
    - The analog value becomes valid again when it falls below the value 20.5 mA.
  - Hysteresis at the lower end of the measuring range (detection "Underflow/nominal range"):
    - The analog value is invalid as of 3.6 mA.
    - The analog value becomes valid again when it rises above the value 3.8 mA.
- Diagnostics for enabling failure monitoring
  You can enable a diagnostic message for the overflow/underflow (Diagnostics overflow/ Diagnostics underflow).
  If you enable wire break and underflow diagnostics simultaneously, the wire break diagnostic is output.

## 5.4.10 Wire break limit

### Definition

You use this to specify the current limit for detecting wire breaks.

### Description

If the current falls below the configured wire break limit, the measured value is declared invalid and, if wire break diagnostics is enabled, corresponding diagnostics information is generated. The value status of the analog input is set to "bad".

- With a wire break limit of 3.6 mA, the measured value becomes invalid when the current falls below 3.6 mA and is marked as valid again when it rises above 3.8 mA.
- There is no hysteresis for a wire break limit of 1.185 mA.

# Displays and interrupts

# 6

## 6.1 Status and error displays

### Definition

The LED displays are status and error indicators.

Diagnostic messages and maintenance events, as well as their possible causes and solutions, are described in the diagnostic messages and maintenance events.

Diagnostics alarms (Page 41)

### Description

The following figure explains the LED displays of the I/O module.

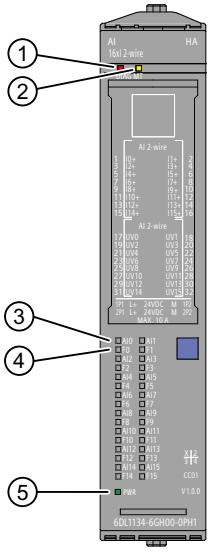


1. DIAG LED (Page 26) (green/red)
2. MT LED (Page 26) (yellow)
3. Channel status LED (Page 27) (green)
4. Channel fault LED (Page 27) (red)
5. PWR LED (Page 27) (green)

# 6.2 LEDs

## 6.2.1 DIAG LED

### Definition

The DIAG LED provides you diagnostic information.

### Description

The diagnostic display of the DIAG LED is as follows:

| DIAG LED | Meaning |
|---|---|
| Off | The power supply of the ET 200SP HA is disrupted or switched off. |
| flashes | Module is not configured. |
| On | Module parameters are assigned. No diagnostic message is pending. |
| flashes | Module parameters are assigned. At least one diagnostic message is pending. |

## 6.2.2 MT LED

### Definition

The MT LED provides maintenance information.

### Description

The MT LED indicates the following maintenance status:

| MT LED | Meaning |
|---|---|
| Off | No maintenance is required. |
| On | Maintenance is required. At least one maintenance event has occurred. |

### 6.2.3 Channel status / fault LEDs

#### Definition

The channel status and channel fault LEDs provide you information about the status and faults of the channels.

#### Description

The channel status and channel fault LEDs indicate the following:

| Channel status LED | Channel fault LED | Meaning |
|---|---|---|
| □ Off | □ Off | Channel deactivated or module switched off |
| ■ On | □ Off | Channel enabled and no channel/module diagnostics pending. |
| □ Off | ■ On | Channel enabled and channel diagnostics/module diagnostics pending. |

### 6.2.4 PWR LED

#### Definition

The PWR LED provides you status information about supply voltage L+.

#### Description

The PWR LED indicates the following status:

| PWR LED | Meaning |
|---|---|
| □ Off | Supply voltage L+ missing. |
| ■ On | Supply voltage L+ present. |

## 6.3 Interrupts

#### Definition

A diagnostic interrupt is an alarm that reports activated events of a device status to the system operator with the appropriate operating authorization (maintenance and service).

## Description

The I/O module generates a diagnostics interrupt at the following events:

- Channel/component temporarily unavailable
- Wire break
- Low limit violated (underflow)
- High limit violated (overflow)
- Supply voltage missing
- Module is faulty
- Retentive memory in carrier module defective
- Retentive memory in the terminal block defective

**Note**

A pending "Module is defective" diagnostic is not deleted by the module until a restart.

# Technical specifications

7

## Technical specifications of AI 16xI 2-wire HA

**Note**

**Power supply**

The supply and input voltages of the ET200SP HA system must always be generated with voltage/current supplies with safe electrical isolation (SELV/PELV according to IEC/UL61010-2-201) with a rated value of 24 V DC ±20 %.

| Article number | 6DL1134-6GH00-0PH1 |
|---|---|
| **General information** | |
| Product type designation | AI 16xI 2-wire HA |
| Firmware version | V1.0 |
| • FW update possible | Yes |
| Usable terminal block | TB type H0, H1, P0 and N0 |
| Color code for module-specific color identification plate | CC01 |
| **Product function** | |
| • I&M data | Yes; I&M0 to I&M3 |
| **Engineering with** | |
| • STEP 7 TIA Portal configurable/integrated from version | V18 |
| • STEP 7 configurable/integrated from version | V5.6 and higher |
| • PCS 7 configurable/integrated from version | V9.1 SP2 |
| • PCS neo can be configured/integrated from version | V4.0 |
| • PROFINET from GSD version/GSD revision | GSDML V2.42 2023.01 |
| **Operating mode** | |
| • Oversampling | No |
| • MSI | No |
| **Redundancy** | |
| • Redundancy capability | No |
| **CiR - Configuration in RUN** | |
| Reparameterization possible in RUN | Yes |
| Calibration possible in RUN | No |
| **Supply voltage** | |
| Rated value (DC) | 24 V |
| permissible range, lower limit (DC) | 19.2 V |
| permissible range, upper limit (DC) | 28.8 V |
| Reverse polarity protection | Yes |
| **Input current** | |
| Current consumption (rated value) | 350 mA |
| **Encoder supply** | |
| Number of outputs | 16 |
| Output voltage (DC) | 24 V |
| Output voltage, min. | 19.2 V |
| Short-circuit protection | Yes |
| **24 V encoder supply** | |
| • 24 V | Yes |
| • Short-circuit protection | Yes; Per output, thermal |
| • Output current per channel, max. | 46 mA |
| • Output current per module, max. | 0.8 A |
| **Power loss** | |

| Article number | 6DL1134-6GH00-0PH1 |
|---|---|
| Power loss, typ. | 0.6 W |
| **Address area** | |
| **Address space per module** | |
| • Address space per module, max. | 34 byte; 32-byte inputs and 2 bytes for QI information |
| • Inputs | 34 byte |
| **Analog inputs** | |
| Number of analog inputs | 16 |
| • For current measurement | 16 |
| permissible input current for current input (destruction limit), max. | 30 mA |
| Cycle time (all channels), min. | 400 ms |
| **Input ranges (rated values), currents** | |
| • 0 to 20 mA | Yes; 16 bit incl. sign |
| – Input resistance (0 to 20 mA) | 250 Ω |
| • 4 mA to 20 mA | Yes; 16 bit incl. sign |
| – Input resistance (4 mA to 20 mA) | 250 Ω |
| **Cable length** | |
| • shielded, max. | 800 m |
| • unshielded, max. | 200 m |
| **Analog value generation for the inputs** | |
| Measurement principle | integrating (Sigma-Delta) |
| **Integration and conversion time/resolution per channel** | |
| • Resolution with overrange (bit including sign), max. | 16 bit; 15 bit at 0 ... 10 mA and 60 Hz interference suppression |
| • Integration time, parameterizable | Yes; channel by channel |
| • Integration time (ms) | 16.6 / 20 / 100 ms |
| **Smoothing of measured values** | |
| • parameterizable | Yes; none, weak, medium, strong, channel-by-channel |
| **Encoder** | |
| **Connection of signal encoders** | |
| • for current measurement as 2-wire transducer | Yes |
| **Errors/accuracies** | |
| Linearity error (relative to input range), (+/-) | 0.01 % |
| Temperature error (relative to input range), (+/-) | 0.005 %/K |
| Crosstalk between the inputs, min. | 60 dB |
| Repeat accuracy in steady state at 25 °C (relative to input range), (+/-) | 0.05 % |
| **Operational error limit in overall temperature range** | |
| • Current, relative to input range, (+/-) | 0.5 % |

| Article number | 6DL1134-6GH00-0PH1 |
|---|---|
| **Basic error limit (operational limit at 25 °C)** | |
| • Current, relative to input range, (+/-) | 0.1 % |
| **Interrupts/diagnostics/status information** | |
| **Alarms** | |
| • Diagnostic alarm | Yes |
| • Limit value alarm | No |
| **Diagnoses** | |
| • Monitoring the supply voltage | Yes |
| • Wire-break | Yes; channel-by-channel, at 4 to 20 mA only |
| • Short-circuit | No |
| • Overflow/underflow | Yes; channel by channel |
| **Diagnostics indication LED** | |
| • MAINT LED | Yes; Yellow LED |
| • Monitoring of the supply voltage (PWR-LED) | Yes; green PWR LED |
| • Channel status display | Yes; green LED |
| • for channel diagnostics | Yes; red LED |
| • for module diagnostics | Yes; green/red DIAG LED |
| **Potential separation** | |
| **Potential separation analog inputs** | |
| • between the channels | No |
| • between the channels and backplane bus | Yes |
| • Between the channels and load voltage L+ | No |
| • between the channels and the power supply of the electronics | No |
| **Potential separation channels** | |
| • between the channels | No |
| • between the channels and backplane bus | Yes |
| • Between the channels and load voltage L+ | No |
| • between the channels and the power supply of the electronics | No |
| **Isolation** | |
| Isolation tested with | 1 500 V DC/1 min, type test |
| **Ambient conditions** | |
| **Ambient temperature during operation** | |
| • horizontal installation, min. | -40 °C |
| • horizontal installation, max. | 70 °C |
| • vertical installation, min. | -40 °C |
| • vertical installation, max. | 60 °C |
| **Dimensions** | |
| Width | 22.5 mm |
| Height | 115 mm |
| Depth | 138 mm |

| Article number | 6DL1134-6GH00-0PH1 |
|---|---|
| **Weights** | |
| Weight, approx. | 148 g |

## Cycle time

The cycle time describes the time slice in which signals from the inputs are acquired and processed.

The cycle time depends on the parameter assignment and can be different for each channel.

| Operating mode | Cycle time |
|---|---|
| Analog inputs for 60 Hz interference frequency suppression | 16.6 ms |
| Analog inputs for 50 Hz interference frequency suppression | 20 ms |
| Analog inputs for 10 Hz interference frequency suppression | 100 ms |

## Update time

The following table describes the update times:

| Interfering frequency suppression | Channel | | | | | | | | | | | | | | | | Update time |
|---|---|---|---|---|---|---|---|---|---|---|---|---|---|---|---|---|---|
| | 0 | 1 | 2 | 3 | 4 | 5 | 6 | 7 | 8 | 9 | 10 | 11 | 12 | 13 | 14 | 15 | |
| 60 Hz | x | | | | | | | | | | | | | | | | 16 ms |
| | x | x | | | | | | | | | | | | | | | 100 ms |
| | x | x | x | | | | | | | | | | | | | | 150 ms |
| | x | x | x | x | | | | | | | | | | | | | 200 ms |
| | x | x | x | x | x | | | | | | | | | | | | 250 ms |
| | x | x | x | x | x | x | | | | | | | | | | | 300 ms |
| | x | x | x | x | x | x | x | | | | | | | | | | 350 ms |
| | x | x | x | x | x | x | x | x | | | | | | | | | 400 ms |
| | x | x | x | x | x | x | x | x | x | | | | | | | | 400 ms |
| | x | x | x | x | x | x | x | x | x | x | | | | | | | 400 ms |
| | x | x | x | x | x | x | x | x | x | x | x | | | | | | 400 ms |
| | x | x | x | x | x | x | x | x | x | x | x | x | | | | | 400 ms |
| | x | x | x | x | x | x | x | x | x | x | x | x | x | | | | 400 ms |
| | x | x | x | x | x | x | x | x | x | x | x | x | x | x | | | 400 ms |
| | x | x | x | x | x | x | x | x | x | x | x | x | x | x | x | | 400 ms |
| | x | x | x | x | x | x | x | x | x | x | x | x | x | x | x | x | 400 ms |

| Interfering frequency suppression | Channel | | | | | | | | | | | | | | | | Update time |
|---|---|---|---|---|---|---|---|---|---|---|---|---|---|---|---|---|---|
| | 0 | 1 | 2 | 3 | 4 | 5 | 6 | 7 | 8 | 9 | 10 | 11 | 12 | 13 | 14 | 15 | |
| 50 Hz | x | | | | | | | | | | | | | | | | 20 ms |
| | x | x | | | | | | | | | | | | | | | 120 ms |
| | x | x | x | | | | | | | | | | | | | | 180 ms |
| | x | x | x | x | | | | | | | | | | | | | 240 ms |
| | x | x | x | x | x | | | | | | | | | | | | 300 ms |
| | x | x | x | x | x | x | | | | | | | | | | | 360 ms |
| | x | x | x | x | x | x | x | | | | | | | | | | 420 ms |
| | x | x | x | x | x | x | x | x | | | | | | | | | 480 ms |
| | x | x | x | x | x | x | x | x | x | | | | | | | | 480 ms |
| | x | x | x | x | x | x | x | x | x | x | | | | | | | 480 ms |
| | x | x | x | x | x | x | x | x | x | x | x | | | | | | 480 ms |
| | x | x | x | x | x | x | x | x | x | x | x | x | | | | | 480 ms |
| | x | x | x | x | x | x | x | x | x | x | x | x | x | | | | 480 ms |
| | x | x | x | x | x | x | x | x | x | x | x | x | x | x | | | 480 ms |
| | x | x | x | x | x | x | x | x | x | x | x | x | x | x | x | | 480 ms |
| | x | x | x | x | x | x | x | x | x | x | x | x | x | x | x | x | 480 ms |
| 10 Hz | x | | | | | | | | | | | | | | | | 100 ms |
| | x | x | | | | | | | | | | | | | | | 600 ms |
| | x | x | x | | | | | | | | | | | | | | 900 ms |
| | x | x | x | x | | | | | | | | | | | | | 1200 ms |
| | x | x | x | x | x | | | | | | | | | | | | 1500 ms |
| | x | x | x | x | x | x | | | | | | | | | | | 1800 ms |
| | x | x | x | x | x | x | x | | | | | | | | | | 2100 ms |
| | x | x | x | x | x | x | x | x | | | | | | | | | 2400 ms |
| | x | x | x | x | x | x | x | x | x | | | | | | | | 2400 ms |
| | x | x | x | x | x | x | x | x | x | x | | | | | | | 2400 ms |
| | x | x | x | x | x | x | x | x | x | x | x | | | | | | 2400 ms |
| | x | x | x | x | x | x | x | x | x | x | x | x | | | | | 2400 ms |
| | x | x | x | x | x | x | x | x | x | x | x | x | x | | | | 2400 ms |
| | x | x | x | x | x | x | x | x | x | x | x | x | x | x | | | 2400 ms |
| | x | x | x | x | x | x | x | x | x | x | x | x | x | x | x | | 2400 ms |
| | x | x | x | x | x | x | x | x | x | x | x | x | x | x | x | x | 2400 ms |
| | Analog/digital converter 0 | | | | | | | | Analog/digital converter 1 | | | | | | | | |

## Example configurations for optimized update times

**Example 1:**

When using 4 channels, the update times can be reduced to 100 ms by symmetrically loading channels 0,1 and 8,9 with a noise frequency suppression of 60 Hz.

**Example 2:**

When using 8 channels, the update times can be limited to 200 ms by symmetrically loading channels 0-4 and 8-11 with a noise frequency suppression of 60 Hz.

# Drivers, parameters, diagnostics messages and address space

# A

## A.1 Parameter assignment

### Parameter assignment in the user program

You can reconfigure individual channels of the I/O module in RUN without affecting the other channels.

### Changing parameters in RUN

The parameters are transferred to the I/O module with the instruction "WRREC".

- Module/channel parameters using data record 128.

The parameters assigned with STEP 7 are not changed permanently in the CPU, which means the parameters assigned with STEP 7 are valid again after a restart.

### Output parameter STATUS

If errors occur when transferring parameters with the "WRREC" instruction, the module continues operation with the previous parameter assignment. The STATUS output parameter contains a corresponding error code.

The STATUS output parameter is 4 bytes long and is configured as followed:

- Byte 1: Function_Num, general error code
- Byte 2: Error_Decode, location of the error code
- Byte 3: Error_Code_1, error code
- Byte 4: Error_Code_2, manufacturer-specific extension of the error code

Module-specific errors are displayed via Error_Decode = 0x80 and Error_Code_1 / Error_Code_2.

| Error_ Code_ 1 | Error_ Code_ 2 | Cause | Remedy |
|---|---|---|---|
| 0xB0 | 0x00 | Number of the data record unknown | Enter valid number for data record. |
| 0xB1 | 0x01 | Length of the data record is incorrect | Enter valid value for data record length. |
| 0xB2 | Variable | Module cannot be reached | • Check station - is the module plugged in correctly?<br>• Check the parameters of the WRREC instruction. |
| 0xE0 | 0x01 | Incorrect version in the header | Correct the version number of the parameter block. |
| 0xE0 | 0x02 | Header error (number or length of parameter block) | Correct the length and number of the parameter blocks. |

| Error_ Code_ 1 | Error_ Code_ 2 | Cause | Remedy |
|---|---|---|---|
| 0xE1 | 0x01 | Reserved bit set | Check and correct the parameters |
| 0xE1 | 0x02 | Invalid diagnostics enable bit set for operating mode | |
| 0xE1 | 0x08 | Invalid coding for interference frequency suppression / integration time | |
| 0xE1 | 0x09 | Invalid coding for smoothing | |
| 0xE1 | 0x0E | Invalid redundancy parameter assignment | |
| 0xE1 | 0x10 | Invalid measurement type | |
| 0xE1 | 0x11 | Invalid measuring range | |

### Valid parameters

Only the values specified in the following are permitted. Values that are not listed are rejected by the I/O module.

Each parameter data record is checked by the I/O module. If a parameter with errors is detected, the complete data record is rejected and the parameters of the I/O module remain unchanged.

## A.2 Parameter assignment and structure of the module/channel parameters

### Structure of data record 128

The data record 128 has a length of 76 bytes.

It contains module parameters and all channel or technology parameters of the 16 channels.

The channel and technology parameters are divided into parameters that influence the actual analog value acquisition and diagnostics enables.

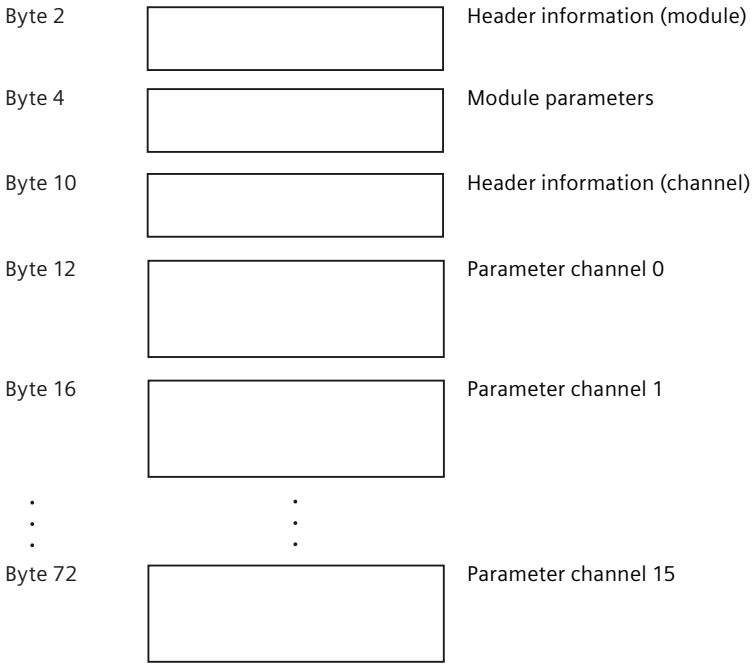
Byte 2
Header information (module)
Byte 4
Module parameters
Byte 10
Header information (channel)
Byte 12
Parameter channel 0
Byte 16
Parameter channel 1
Byte 72
Parameter channel 15

## Header information and module parameters

The following figure shows the structure of the header information and module parameters.

| | | |
|---|---|---|
| Byte 0 | 7 6 5 4 3 2 1 0<br>0 1 0 0 0 0 0 0 | Minor version<br>Major version |
| Byte 1 | 7 6 5 4 3 2 1 0<br>0 0 0 0 0 0 1 0 | Number of following parameter structures |
| Byte 2 | 7 6 5 4 3 2 1 0<br>0 0 0 0 0 0 0 1 | Number of following module parameter blocks |
| Byte 3 | 7 6 5 4 3 2 1 0<br>0 0 0 0 0 1 1 0 | Length of the module parameter block |
| Byte 4 | 7 6 5 4 3 2 1 0<br>0 0 0 0 0 0 0 | Diagnostics: Missing supply voltage L+ |
| Byte 5 | 7 6 5 4 3 2 1 0<br>0 0 0 0 0 0 0 0 | Reserved |
| Byte 6 | 7 6 5 4 3 2 1 0<br>0 0 0 0 0 0 0 0 | Stand-alone mode: Irrelevant<br>Redundancy mode: Logical base address, high byte |
| Byte 7 | 7 6 5 4 3 2 1 0<br>0 0 0 0 0 0 0 0 | Stand-alone mode: Irrelevant<br>Redundancy mode: Logical base address, low byte |
| Byte 8 | 7 6 5 4 3 2 1 0<br>0 0 0 0 0 0 0 0 | Stand-alone mode: Irrelevant<br>Redundancy mode: Logical base address of the partner module, high byte |
| Byte 9 | 7 6 5 4 3 2 1 0<br>0 0 0 0 0 0 0 0 | Stand-alone mode: Irrelevant<br>Redundancy mode: Logical base address of the partner module, low byte |
| Byte 10 | 7 6 5 4 3 2 1 0<br>0 0 0 1 0 0 0 0 | Number of following channel parameter blocks = 16 |
| Byte 11 | 7 6 5 4 3 2 1 0<br>0 0 0 0 0 1 0 0 | Length of a channel parameter block = 4 |

### Channel parameters

Each channel parameter block contains the cable parameters for the analog input (4 bytes).

The following figure shows the structure of the channel parameters for channel 0 to 15.

x = 12 + (channel number * 4); with channel number 0...15

All unused bits and the bits or bytes marked as "reserved" must be set to zero.
You activate a channel parameter by setting the corresponding bit to "1" or the corresponding value.

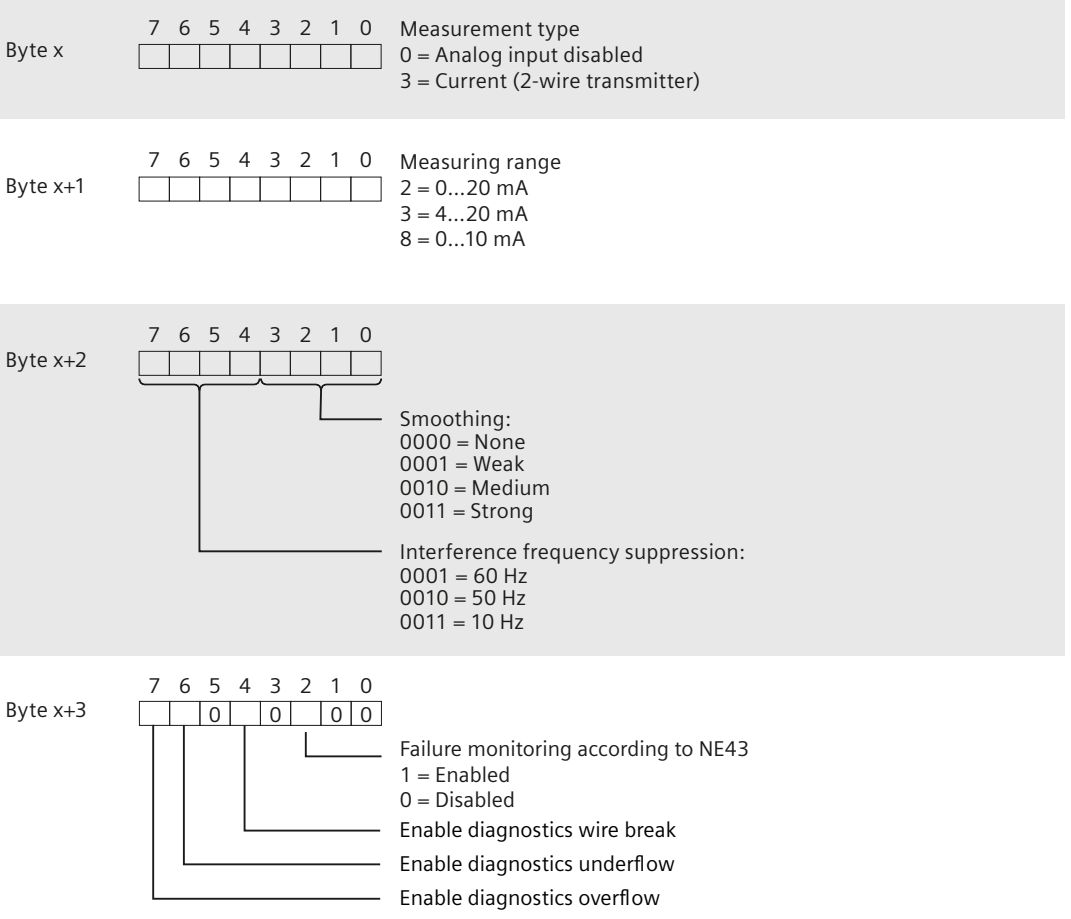


## A.3 Diagnostics alarms

### Diagnostics messages

A diagnostics message is generated for each detected diagnostics event. The DIAG LED on the module flashes.

There is additionally a channel-specific display of the diagnostics through the corresponding channel fault/channel status LEDs.

The diagnostics messages can, for example, be read out in the diagnostics buffer of the CPU.

Diagnostic messages are assigned either to one input on a channel-specific basis or to all inputs as a module message. In the event of diagnostics messages that affect the entire module, all channels are switched off. For diagnostics messages that relate to individual channels, only the corresponding analog input is affected.

| Diagnostics message | Error code | Assignment | Meaning | Remedy |
|---|---|---|---|---|
| Channel/component temporarily unavailable | $1F_H$ | Module | Update of the firmware is being performed or has been canceled. The module does not perform any measurements during this time. | • Restart firmware update<br>• Wait for firmware update |
| Wire break | $6_H$ | Analog input | • Impedance of encoder circuitry is too high<br>• Wire break between the module and sensor<br>• Channel not connected (open) | • Use a different encoder type or modify the wiring, for example, using cables with a larger cross-section<br>• Connect the cable<br>• Disable diagnostics<br>• Connect the encoder contacts |
| High limit violated | $7_H$ | Analog input | • The analog value is above the overrange.<br>• Short-circuit of input to L+ | Correct the module/encoder tuning |
| Low limit violated | $8_H$ | Analog input | The analog value is below the underrange. | Correct the module/encoder tuning |
| Parameter assignment error | $10_H$ | Module | • Parameter assignment does not match the terminal block used<br>• Incorrect parameter assignment | • Correct the parameter assignment<br>• Check terminal block[1] |
| Supply voltage missing | $11_H$ | Module | Missing or insufficient supply voltage L+ | • Check wiring of the supply voltage L+ on the terminal block<br>• Check the terminal block type |
| Module is faulty | $100_H$ | Module | Internal module error has occurred | Replace module |
| Retentive memory in carrier module defective | $154_H$ | Module | A memory block error was detected on the support module | Replace carrier module |
| Retentive memory in the terminal block defective | $155_H$ | Module | A memory block error was detected on the terminal block | Replace terminal block |

## A.4 Maintenance events

### Maintenance events

A maintenance event is generated each time a maintenance requirement is identified. The MT LED lights up on the module.

Maintenance messages are assigned either to one input on a channel-specific basis or to inputs as a module message affecting all inputs.

Maintenance messages have no direct effect on the function of the module or the analog value acquisition.

| Maintenance message | Error code | Assignment | Meaning / Cause | Remedy |
|---|---|---|---|---|
| Retentive memory in carrier module defective | $154_H$ | Module | Fault detected in the data block on the carrier module during operation | Replace carrier module |
| Retentive memory in the terminal block defective | $155_H$ | Module | A memory block error was detected on the terminal block during operation | Replace terminal block |

# A.5 Address space

## Abbreviations

- "IB" stands for input byte, that is, the module start address in the input area
- "QAIn" stands for value status (QI) of analog input n

## Evaluating the value status

The input address space contains one value status (QI) bit for each analog input.

Irrespective of the diagnostics enables, each value status (each QI bit) provides information on the validity of the corresponding process value.

- Value status = 1: Process value okay, "good"
- Value status = 0: Process value not okay, "bad"

Basically, the value status is set to "good" when the analog value can be acquired without error. The value status is set to "bad" in the following cases:

- The analog value cannot be acquired due to an error.
- The analog input is disabled.

## Address space

The following tables show the allocation of the address space of the I/O module.

## Input area

| IB x + | 7 | 6 | 5 | 4 | 3 | 2 | 1 | 0 |
|---|---|---|---|---|---|---|---|---|
| 0...1 | Analog value, analog input 0 | | | | | | | |
| :<br>: | :<br>: | | | | | | | |

| **IB x +** | **7** | **6** | **5** | **4** | **3** | **2** | **1** | **0** |
|---|---|---|---|---|---|---|---|---|
| 30...31 | Analog value analog input 15 | | | | | | | |
| 32 | QAI7 | QAI6 | QAI5 | QAI4 | QAI3 | QAI2 | QAI1 | QAI0 |
| 33 | QAI15 | QAI14 | QAI13 | QAI12 | QAI11 | QAI10 | QAI9 | QAI8 |

# Analog value display

# B

## B.1 Analog value display in the current measurement range 0 to 10 mA

Table B-1 Representation / current measuring range 0 to 10 mA

| Values | | Current measuring range | Range |
|---|---|---|---|
| Dec. | Hex. | 0 to 10 mA | |
| 32767 | 7FFF | >11.76 mA | Overflow |
| 32511 | 7EFF | 11.76 mA | Overrange |
| 27649 | 6C01 | | |
| 27648 | 6C00 | 10 mA | Nominal range |
| 20736 | 5100 | 7.5 mA | |
| 1 | 1 | 361.69 nA | |
| 0 | 0 | 0 mA | |

## B.2 Analog value display in the current measurement range 0 to 20 mA

Table B-2 Representation / current measuring ranges 0 to 20 mA

| Values | | Current measuring range | Range |
|---|---|---|---|
| Dec. | Hex. | 0 to 20 mA | |
| 32767 | 7FFF | >23.52 mA | Overflow |
| 32511 | 7EFF | 23.52 mA | Overrange |
| 27649 | 6C01 | | |
| 27648 | 6C00 | 20 mA | Nominal range |
| 20736 | 5100 | 15 mA | |
| 1 | 1 | 723.4 nA | |
| 0 | 0 | 0 mA | |

# B.3 Analog value display with failure monitoring in current measuring range 4...20 mA

Table B-3 Display / current measuring range with failure monitoring according to NE43 (current measuring range 4 to 20 mA)

| **Values** | | **NE43** | | | |
|---|---|---|---|---|---|
| hex | mA | Ranges | S7 value | QI | Interrupt |
| | | Overflow range (upper failure range) | $7FFF_H$ | bad | Overflow |
| $7EFF_H$ | 22.81 | | | | |
| | | | | | |
| $72C0_H$ | 21 | | | | |
| | | Hysteresis | | | |
| $6F60_H$ | 20.5 | **Note**: Upper end of the measuring range ("Underflow/nominal range" detection).<br>• The analog value is invalid as of 21 mA.<br>• The analog value becomes valid again when it falls below the value 20.5 mA. | | | |
| | | Measuring range | Process values | good | |
| $6C00_H$ | 20 | | | | |
| | | | | | |
| 0 | 4 | | | | |
| $FFFF_H$ | 3.9994 | | | | |
| | | | | | |
| $FEA6_H$ | 3.8 | Hysteresis | | | |
| | | **Note**: Lower end of the measuring range ("Underflow/nominal range" detection).<br>• The analog value is invalid as of 3.6 mA.<br>• The analog value becomes valid again when it rises above the value 3.8 mA. | | | |
| $FD4D_H$ | 3.6 | Underflow range (lower failure range) | $8000_H$ [1)] | bad | Underflow / Wire break |
| | | | | | |
| $ED00_H$ | 1.185 | | | | |
| | | | | | |

[1] If wire break diagnostics is enabled, a wire break with process value $7FFF_H$ is reported in the underflow area.

## B.4 Analog value display without failure monitoring in current measuring range 4...20 mA

Table B-4 Representation / current measuring range without enabled failure monitoring (S7 definition - current measuring range 4 to 20 mA)

| Values | | Current measuring range | Range |
|---|---|---|---|
| **Dec.** | **Hex.** | **4 to 20 mA** | |
| 32767 | $7FFF_H$ | >22.81 mA | Overflow |
| 32511 | $7EFF_H$ | 22.81 mA | Overrange |
| 27649 | $6C01_H$ | | |
| 27648 | $6C00_H$ | 20 mA | Nominal range |
| 20736 | $5100_H$ | 16 mA | |
| 1 | $1_H$ | 4 mA + 578.7 nA | |
| 0 | $0_H$ | 4 mA | |
| -1 | $FFFF_H$ | | Underrange |
| -4864 | $ED00_H$ | 1.185 mA | |
| -32768 | $8000_H$ [1)] | < 1.185 mA | Underflow / Wire break |

[1] If wire break diagnostics is enabled, a wire break with process value $7FFF_H$ is reported in the underflow area.