SIEMENS

Data sheet 5SG5301

NEOZED, fuse base, D01, 3-pole, 16 A, Un AC: 400 V, Un DC: 250 V



Figure similar

Model	
Product brand name	NEOZED
Product designation	Fuse base
Design of the product	NEOZED fuse base installation
version	with protection against contact BGV A3
General technical data	
Number of poles	3
Size of fuse system / acc. to DIN EN 60269-1	D01
Supply voltage	
Operating voltage / rated value	400 V
Dissipation	
Power loss [W] / for rated value of the current / at AC / in hot operating state / per pole	0.6 W
Main circuit	
Operating current / rated value	16 A

Subject to change without notice
© Copyright Siemens

Product details

Product component / Cover	Yes

Mechanical Design

Height	83 mm
Width	81 mm
Depth	64 mm
Mounting type	DIN rail
Net weight	388 g
Material / of D fuse base	plastic

Certificates

Reference code	
• acc. to DIN EN 61346-2	F
• acc. to DIN EN 81346-2	F

General Product Approval	Declaration of Conformity	Test Certificates
VDE	EG-Konf.	Type Test Certificates/Test Report

Further information

Information- and Downloadcenter (Catalogs, Brochures,…)
http://www.siemens.com/lowvoltage/catalogs

Industry Mall (Online ordering system)
https://mall.industry.siemens.com/mall/en/en/Catalog/product?mlfb=5SG5301

Service&Support (Manuals, Certificates, Characteristics, FAQs,...)
https://support.industry.siemens.com/cs/ww/en/ps/5SG5301

Image database (product images, 2D dimension drawings, 3D models, device circuit diagrams, ...)
http://www.automation.siemens.com/bilddb/cax_en.aspx?mlfb=5SG5301

CAx-Online-Generator
http://www.siemens.com/cax

Tender specifications
http://www.siemens.com/specifications

Subject to change without notice
© Copyright Siemens

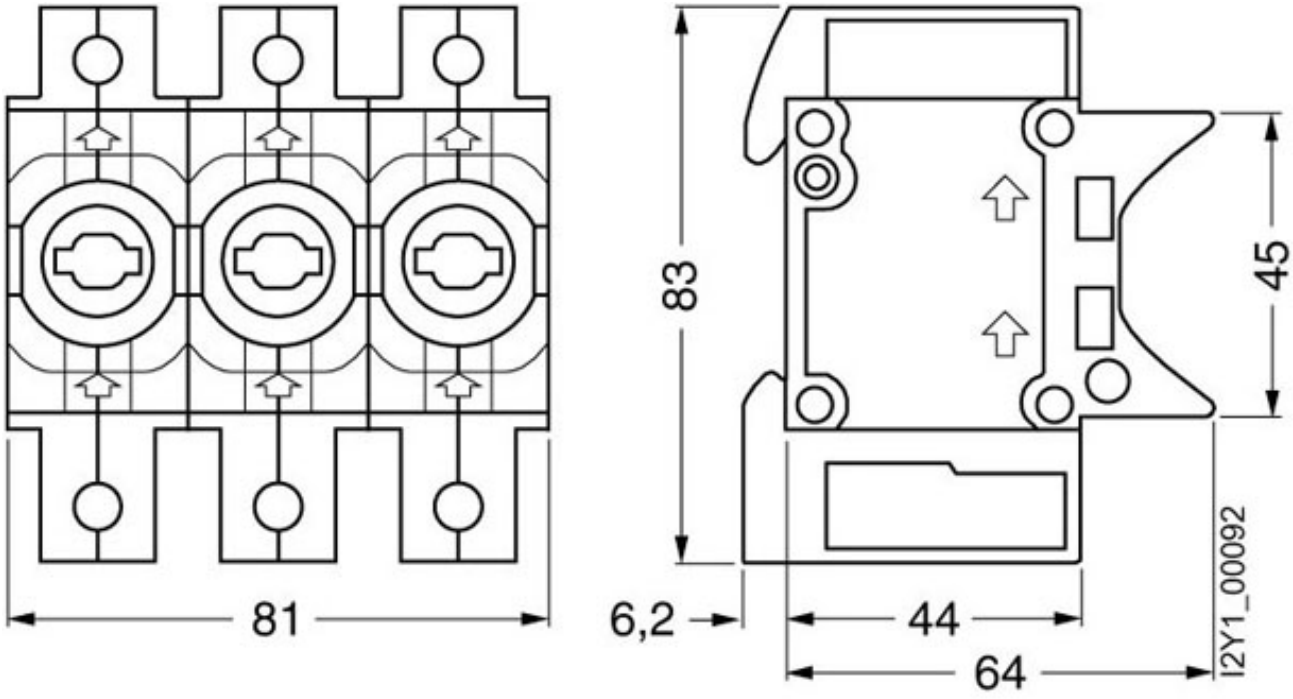

Subject to change without notice
© Copyright Siemens

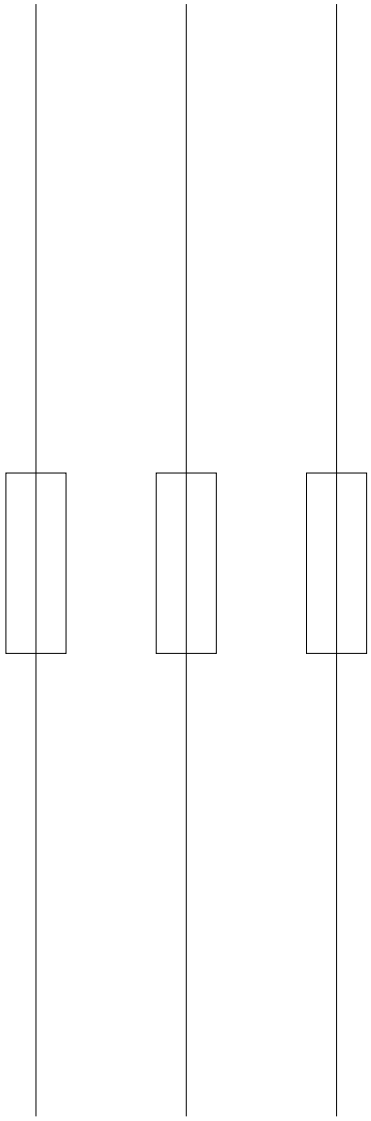

Subject to change without notice
© Copyright Siemens