SIEMENS

Data sheet 3RA2337-8XB30-1KB4



reversing contactor assembly, AC-3e/AC-3, 65 A, 30 kW / 400 V, 3-pole, 24 V DC, 0.7-1.25*Us, with varistor plugged on, screw terminal, electrical and mechanical interlock, auxiliary contacts: 2 x 1 NO

product brand name	SIRIUS
product designation	Reversing contactor assembly
product type designation	3RA23
manufacturer's article number	
● 1 of the supplied contactor	3RT2037-1KB40
● 2 of the supplied contactor	3RT2037-1KB40
● of the supplied RS assembly kit	3RA2933-2AA1
General technical data	
size of contactor	S2
product extension auxiliary switch	Yes
shock resistance at rectangular impulse	
● at DC	7.7g / 5 ms, 4.5g / 10 ms
shock resistance with sine pulse	
● at DC	12g / 5 ms, 7g / 10 ms
mechanical service life (operating cycles)	
● of contactor typical	10 000 000
● of the contactor with added auxiliary switch block typical	10 000 000
reference code according to IEC 81346-2	Q
Substance Prohibitance (Date)	10/01/2014
SVHC substance name	Lead - 7439-92-1 Lead monoxide (lead oxide) - 1317-36-8 Melamine - 108-78-1
Weight	2.787 kg
Ambient conditions	
installation altitude at height above sea level maximum	2 000 m
ambient temperature	
● during operation	-25 ... +60 °C
● during storage	-55 ... +80 °C
Main circuit	
number of poles for main current circuit	3
number of NO contacts for main contacts	3
number of NC contacts for main contacts	0
operating voltage	
● at AC-3 rated value maximum	690 V
● at AC-3e rated value maximum	690 V
operational current	
● at AC-3	
— at 400 V rated value	65 A
— at 500 V rated value	65 A
— at 690 V rated value	47 A
● at AC-3e	

Subject to change without notice
© Copyright Siemens

— at 400 V rated value	65 A
— at 500 V rated value	65 A
— at 690 V rated value	47 A
operating power	
● at AC-3	
— at 400 V rated value	30 kW
— at 500 V rated value	37 kW
— at 690 V rated value	37 kW
● at AC-3e	
— at 400 V rated value	30 kW
— at 690 V rated value	37 kW
● at AC-4 at 400 V rated value	30 kW
operating frequency	
● at AC-3 maximum	700 1/h
● at AC-3e maximum	700 1/h
Control circuit/ Control	
type of voltage of the control supply voltage	DC
control supply voltage 1 at DC rated value	24 V
design of the surge suppressor	with varistor
closing power of magnet coil at DC	21.5 W
holding power of magnet coil at DC	1 W
Auxiliary circuit	
number of NC contacts for auxiliary contacts	
● per direction of rotation	0
number of NO contacts for auxiliary contacts	
● per direction of rotation	1
● instantaneous contact	2
contact reliability of auxiliary contacts	< 1 error per 100 million operating cycles
UL/CSA ratings	
full-load current (FLA) for 3-phase AC motor	
● at 480 V rated value	65 A
● at 600 V rated value	62 A
yielded mechanical performance [hp] for 3-phase AC motor	
● at 220/230 V rated value	20 hp
● at 460/480 V rated value	50 hp
● at 575/600 V rated value	50 hp
contact rating of auxiliary contacts according to UL	A600 / Q600
Short-circuit protection	
design of the fuse link	
● for short-circuit protection of the main circuit	
— with type of coordination 1 required	gG NH 3NA, DIAZED 5SB, NEOZED 5SE: 250 A
— with type of coordination 2 required	gG NH 3NA, DIAZED 5SB, NEOZED 5SE: 125 A
● for short-circuit protection of the auxiliary switch required	fuse gG: 10 A
Installation/ mounting/ dimensions	
mounting position	+/-180° rotation possible on vertical mounting surface; can be tilted forward and backward by +/- 22.5° on vertical mounting surface
fastening method	screw and snap-on mounting onto 35 mm DIN rail
height	141 mm
width	120 mm
depth	130 mm
required spacing	
● with side-by-side mounting	
— forwards	10 mm
— backwards	0 mm
— upwards	10 mm
— downwards	10 mm
— at the side	10 mm
● for grounded parts	
— forwards	10 mm
— backwards	0 mm
— upwards	10 mm

Subject to change without notice
© Copyright Siemens

— at the side	10 mm
— downwards	10 mm
● for live parts	
— forwards	10 mm
— backwards	0 mm
— upwards	10 mm
— downwards	10 mm
— at the side	10 mm
Connections/ Terminals	
type of electrical connection	
● for main current circuit	screw-type terminals
● for auxiliary and control circuit	screw-type terminals
● at contactor for auxiliary contacts	Screw-type terminals
● of magnet coil	Screw-type terminals
type of connectable conductor cross-sections for main contacts	
● solid	2x (1 ... 35 mm²), 1x (1 ... 50 mm²)
● solid or stranded	2x (1 ... 35 mm²), 1x (1 ... 50 mm²)
● finely stranded with core end processing	2x (1 ... 25 mm²), 1x (1 ... 35 mm²)
type of connectable conductor cross-sections	
● for auxiliary contacts	
— solid or stranded	2x (0.5 ... 1.5 mm²), 2x (0.75 ... 2.5 mm²)
— finely stranded with core end processing	2x (0.5 ... 1.5 mm²), 2x (0.75 ... 2.5 mm²)
● for AWG cables for auxiliary contacts	2x (20 ... 16), 2x (18 ... 14)
Safety related data	
product function suitable for safety function	Yes
Electrical Safety	
protection class IP on the front according to IEC 60529	IP20
touch protection on the front according to IEC 60529	finger-safe, for vertical contact from the front
Communication/ Protocol	
product function bus communication	Yes
protocol is supported AS-Interface protocol	No
product function control circuit interface with IO link	No

Approvals Certificates

General Product Approval | **Maritime application**

Maritime application | **other**

Confirmation

Environment

Environmental Confirmations

Further information

Information on the packaging
https://support.industry.siemens.com/cs/ww/en/view/109813875
Information- and Downloadcenter (Catalogs, Brochures,…)
https://www.siemens.com/ic10
Industry Mall (Online ordering system)
https://mall.industry.siemens.com/mall/en/en/Catalog/product?mlfb=3RA2337-8XB30-1KB4

Subject to change without notice
© Copyright Siemens

Cax online generator
http://support.automation.siemens.com/WW/CAXorder/default.aspx?lang=en&mlfb=3RA2337-8XB30-1KB4
Service&Support (Manuals, Certificates, Characteristics, FAQs,...)
https://support.industry.siemens.com/cs/ww/en/ps/3RA2337-8XB30-1KB4
Image database (product images, 2D dimension drawings, 3D models, device circuit diagrams, EPLAN macros, ...)
http://www.automation.siemens.com/bilddb/cax_de.aspx?mlfb=3RA2337-8XB30-1KB4&lang=en
Characteristic: Tripping characteristics, I²t, Let-through current
https://support.industry.siemens.com/cs/ww/en/ps/3RA2337-8XB30-1KB4/char
Further characteristics (e.g. electrical endurance, switching frequency)
http://www.automation.siemens.com/bilddb/index.aspx?view=Search&mlfb=3RA2337-8XB30-1KB4&objecttype=14&gridview=view1

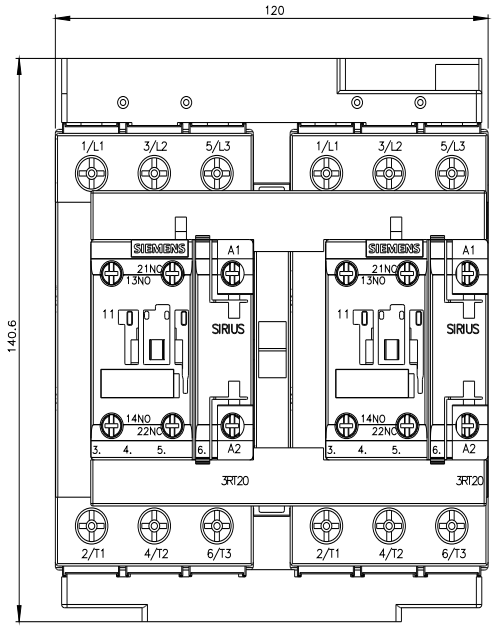

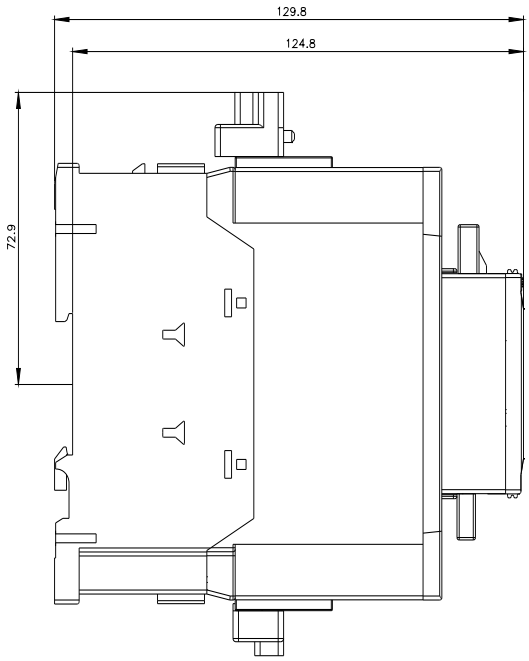

Subject to change without notice
© Copyright Siemens

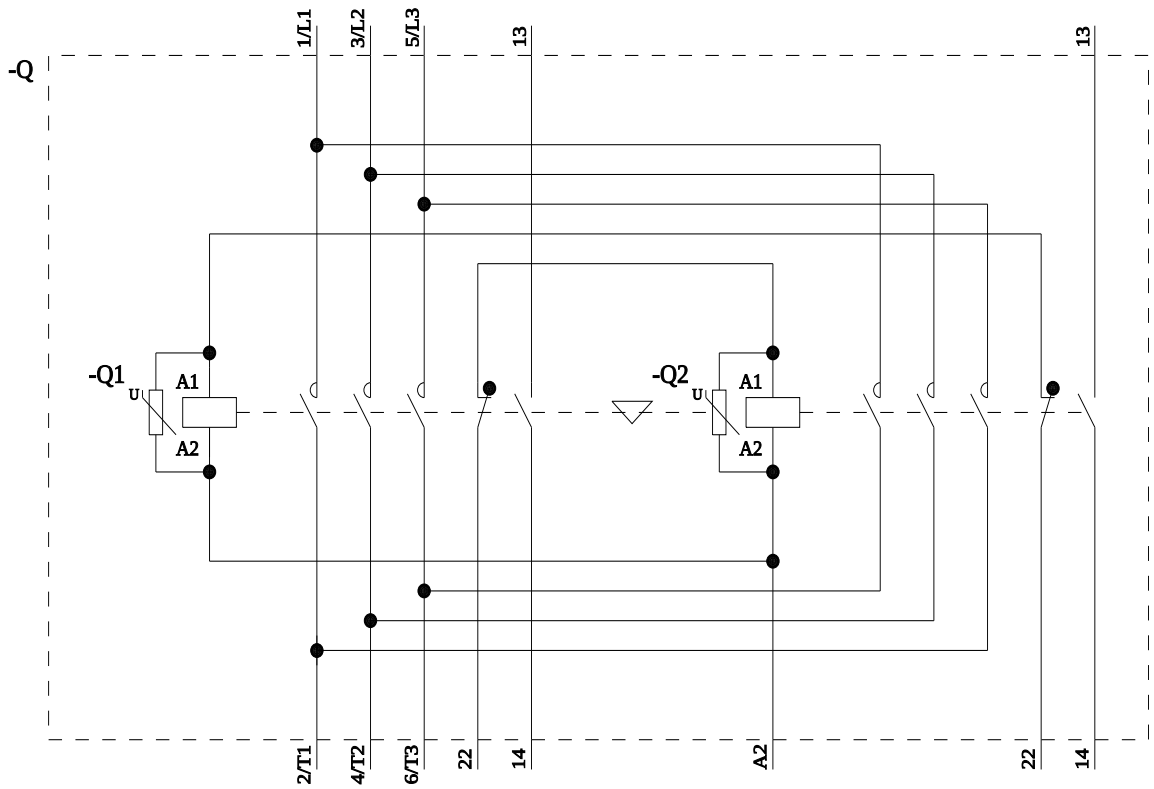

last modified: 4/4/2025

Subject to change without notice
© Copyright Siemens

Mouser Electronics

Authorized Distributor

Click to View Pricing, Inventory, Delivery & Lifecycle Information:

Siemens:

3RA23378XB301KB4