SIEMENS

Data sheet 3VA6580-6JP32-2AA0



circuit breaker 3VA6 UL Frame 800 breaking capacity class H 65 kA @ 480 V 3-pole, line protection ETU550, LSI, In=800 A overload protection, 100% rated Ir=315 A ...800 A short-circuit protection Isd=0.6..10x In, Ii=1.5..10x In neutral conductor protection optionally with ext. CT up to 160% nut keeper kit

Model	
product brand name	SENTRON
product designation	Molded-case circuit breaker
product designation / according to UL file	HMAE
design of the product	System protection
design of the load switch / according to UL 489 / Heating, Air Conditioning, and Refrigeration circuit breaker (HACR Type)	Yes
design of the overcurrent release	ETU550
protection function of the overcurrent release	LSI
number of poles	3
General technical data	
insulation voltage / rated value	800 V
operating voltage / at AC / rated value	690 V
power loss [W] / maximum	231 W
power loss [W] / for rated value of the current / at AC / in hot operating state / per pole	77 W
mechanical service life (operating cycles) / typical	10 000
electrical endurance (operating cycles) / at AC-1 / at 380/415 V	5 800
electrical endurance (operating cycles) / at AC-1 / at 690 V	4 000
electrical endurance (operating cycles) / at 480 V	5 800
electrical endurance (operating cycles) / at 600 V	4 000
product feature / for neutral conductors / upgradable/retrofittable / short-circuit and overload proof	Yes
ground-fault monitoring version	without
product function	
● communication function	Yes
● other measurement function	No
Net Weight	14.195 kg
Current	
marking / according to UL 489 / 100%-rated breaker	Yes
operational current	
● at 40 °C	800 A
● at 45 °C	800 A
● at 50 °C	800 A
● at 55 °C	776 A
● at 60 °C	752 A
● at 65 °C	708 A
● at 70 °C	664 A
Switching capacity according to IEC 60947	
switching capacity class of the circuit breaker	H
maximum short-circuit current breaking capacity (Icu)	

Subject to change without notice
© Copyright Siemens

● at 240 V	110 kA
● at 415 V	85 kA
● at 690 V	35 kA
operating short-circuit current breaking capacity (Ics)	
● at 240 V	110 kA
● at 415 V	85 kA
● at 690 V	19 kA
short-circuit current making capacity (Icm)	
● at 240 V	242 kA
● at 415 V	187 kA
● at 690 V	74 kA
Switching capacity according to UL 489	
current breaking capacity	
● at 240 V	150 kA
● at 480 V	65 kA
● at 600 V	35 kA
Adjustable parameters	
adjustable response value setting current (Ir) / of the L-trip / with I2t characteristic	
● minimum	315 A
● maximum	800 A
adjustable response value delay time (tr) / for L-tripping / with I2t characteristic	
● minimum	0.5 s
● maximum	25 s
adjustable response value setting current (Isd) / of S-trip / with I0t characteristic	
● minimum	480 A
● maximum	8 000 A
adjustable response value setting current (Isd) / of S-trip / with I2t characteristic	
● minimum	480 A
● maximum	8 000 A
adjustable response value delay time (tsd) / for S-tripping / with I0t characteristic	
● minimum	0.05 s
● maximum	0.5 s
adjustable response value delay time (tsd) / for S-tripping / with I2t characteristic	
● minimum	0.05 s
● maximum	0.5 s
adjustable response value setting current (Ii) / for I-tripping	
● minimum	1 200 A
● maximum	8 000 A
adjustable setting current (InN) / for N-tripping	
● minimum	0 A
● maximum	0 A
design of the N-conductor protection	adjustable OFF; 20% to 160%
product function / grounding protection	No
Mechanical Design	
product component	
● undervoltage release	No
● voltage trigger	No
● trip indicator	No
height [in]	12.91 in
height	328 mm
width [in]	8.27 in
width	210 mm
depth [in]	4.72 in
depth	120 mm
Connections	
arrangement of electrical connectors / for main current circuit	Front connection

Subject to change without notice
© Copyright Siemens

type of electrical connection / for main current circuit	nut keeper kit on both ends
type of connectable conductor cross-sections / for flat-bar terminal connection / minimum	20 x 4 mm
type of connectable conductor cross-sections / for flat-bar terminal connection / maximum	50 x 28 mm
Auxiliary circuit	
number of CO contacts / for auxiliary contacts	0
Accessories	
product extension / optional / motor drive	No
Environmental conditions	
protection class IP / on the front	IP40
ambient temperature	
• during operation / minimum	-25 °C
• during operation / maximum	70 °C
• during storage / minimum	-40 °C
• during storage / maximum	80 °C
reference code / according to IEC 81346-2	Q

Approvals / Certificates

General Product Approval

CCC EG-Konf. UK CA UL Miscellaneous EAC

EMV	Test Certificates	Marine / Shipping		other	
RCM	Type Test Certific-ates/Test Report	ABS	DNV	Miscellaneous	Confirmation

other	Dangerous goods	Environment
Miscellaneous	Transport Information	Environmental Con-firmations

Further information

Information on the packaging
https://support.industry.siemens.com/cs/ww/en/view/109813875
Information- and Downloadcenter (Catalogs, Brochures,…)
http://www.siemens.com/lowvoltage/catalogs
Industry Mall (Online ordering system)
https://mall.industry.siemens.com/mall/en/en/Catalog/product?mlfb=3VA6580-6JP32-2AA0
Service&Support (Manuals, Certificates, Characteristics, FAQs,...)
https://support.industry.siemens.com/cs/ww/en/ps/3VA6580-6JP32-2AA0
Image database (product images, 2D dimension drawings, 3D models, device circuit diagrams, ...)
http://www.automation.siemens.com/bilddb/cax_en.aspx?mlfb=3VA6580-6JP32-2AA0
CAx-Online-Generator
http://www.siemens.com/cax
Tender specifications
http://www.siemens.com/specifications

Subject to change without notice
© Copyright Siemens

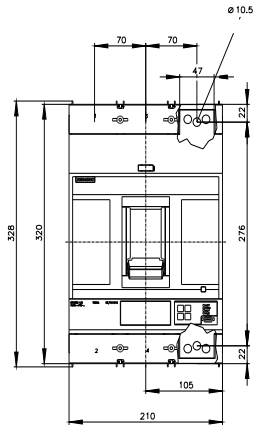

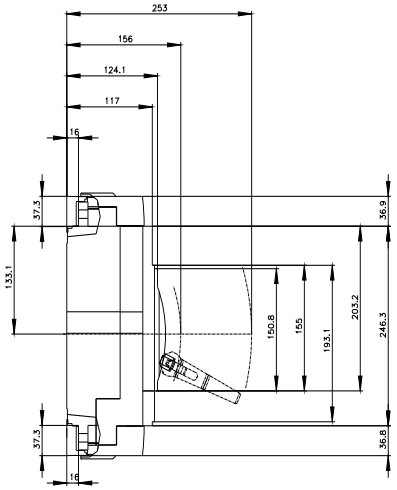

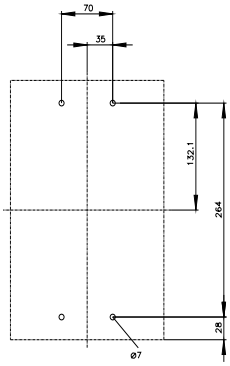

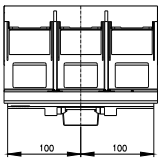

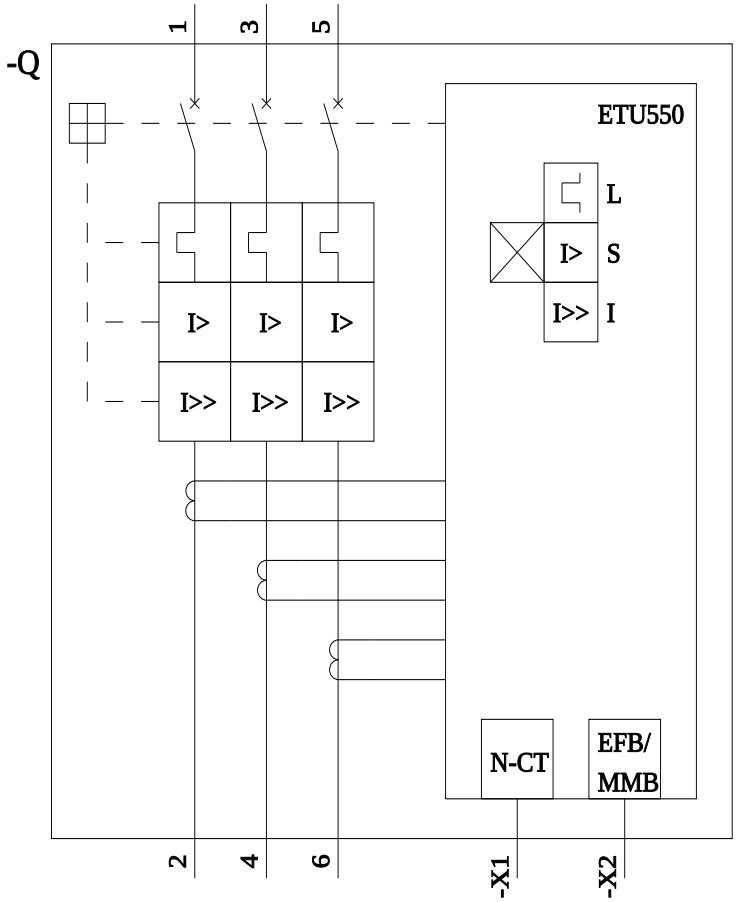

© Copyright Siemens

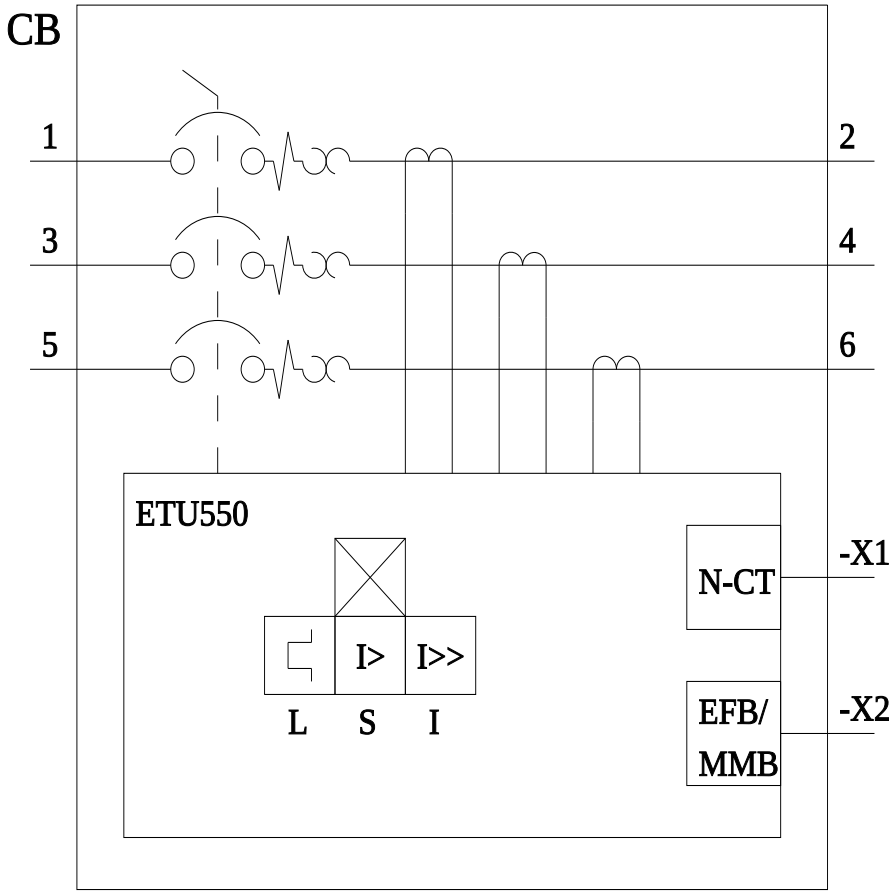

last modified: 3/31/2025

Subject to change without notice
© Copyright Siemens

Subject to change without notice
© Copyright Siemens