SIEMENS

# SIMULATION UNIT

Compact Operating Instructions

V 1.1

## Legal Information

### Warning notice system

This manual contains notices you have to observe in order to ensure your personal safety, as well as to prevent damage to property. The notices referring to your personal safety are highlighted in the manual by safety alert symbol, notices referring only to property damage have no safety alert symbol. These notices shown below are graded according to the degree of danger.

| ⚠ **DANGER** |
| --- |
| Indicates that death or severe personal injury **will** result if proper precautions are not taken. |

| ⚠ **WARNING** |
| --- |
| Indicates that death ore severe personal injury **may** result if proper precautions are not taken. |

| ⚠ **CAUTION** |
| --- |
| With a safety alert symbol, indicates that minor personal injury can result if proper precautions are not taken.. |

| **CAUTION** |
| --- |
| Without a safety alert symbol, indicates that property damage can result if proper precautions are not taken.. |

| **NOTICE** |
| --- |
| Indicates that an unintended result or situation can occur if the relevant information is not taken into account. |

If more than one degree of danger is present, the warning notice representing the highest degree of danger will be used. A notice warning of injury to persons with a safety alert symbol may also include a warning relating to property damage.

**Qualified Personal**

The product/system described in this documentation may be operated only by personal qualified for the specific task in accordance with the relevant documentation, in particular its warning notices and safety instructions.
Qualified personnel are those who, based on their training and experience, are capable of identifying risks and avoiding potential hazards when working with these products/systems.

**Proper use of Siemens products**

Note the following:

| ⚠ **WARNING** |
| --- |
| Siemens products may only be used for the applications described in the catalog and in the relevant technical documentation. If products and components from other manufacturers are used, these must be recommended or approved by Siemens. Proper transport, storage, installation, assembly, commissioning, operation and maintenance are required to ensure that the products operate safely and without any problem. The permissible ambient conditions must be complied with. The information in the relevant documentation must be observed. |

**Trademarks**

All names identified by R are registered trademarks of Siemens AG. The remaining trademarks in this publication may be trademarks whose use by third parties for their own purposes could violate the rights of the owner.

**Disclaimer of Liability**

We have reviewed the contents of this publication to ensure consistency with the hardware and software described. Since variance cannot be precluded entirely, we cannot guarantee full consistency. However, the information in this publication is reviewed regularly and any necessary corrections are included in subsequent editions.

# Table of contents


1 Introduction ..... 6
1.1 Introduction to the SIMULATION UNIT ..... 6
1.2 Produktgroup SIMULATION UNIT ..... 7
1.3 Type designations ..... 7
2 Safety notes ..... 8
2.1 Important notes on using the SIMULATION UNIT product family ..... 8
2.2 Important notes on using the device in hazardous areas ..... 10
3 Description ..... 11
3.1 Unpacking and checking ..... 11
3.2 SIMULATION UNIT components of the product ..... 11
3.3 Product group SIMULATION UNIT ..... 12
3.3.1 SIMULATION UNIT PN ..... 12
3.3.2 SIMULATION UNIT PB ..... 14
3.4 Ethernet Ports Network P1 und P2 ..... 16
3.5 Control Port ..... 16
3.6 USB Host ..... 16
3.7 Profibus Port ..... 16
3.8 Micro SD Karte ..... 17
3.8.1 Position of the Micro SD Memory Card ..... 17
3.9 Digital I/O in SIMULATION UNIT PN ..... 18
3.10 Digital I/O in SIMULATION UNIT PB ..... 19
3.11 Description of the LEDs ..... 20
3.12 The Buttom ..... 20
4 Assembling ..... 21
4.1 Installation ..... 21
4.2 Installation options ..... 22
4.3 General installation ..... 22
4.3.1 Installation on a DIN rail ..... 22
4.3.2 Installation on a standard rail ..... 24
4.3.3 Wall mounting ..... 25
5 Connecting ..... 26

5.1 Notes on commissioning ..... 26
5.2 Power supply - general ..... 26
5.3 Power supply ..... 27
5.3.1 Connecting the power supply ..... 27
5.3.2 24 V DC – product group SIMULATION UNIT ..... 28
5.4 Digital In/Outputs ..... 29
5.5 Connecting functional ground ..... 30
6 Technical data ..... 31
6.1 Construction, installation and environmental conditions ..... 31
6.2 Connectors and electrical data ..... 32
6.3 Cable lengths ..... 34
6.4 Other properties ..... 35
7 Dimension drawings ..... 36
7.1 SIMULATION UNIT PN ..... 36
7.2 SIMULATION UNIT PB ..... 39
8 Approvals ..... 43
8.1 SIMULATION UNIT approvals, certificates ..... 43
8.2 SIMULATION UNIT Conformity certificates ..... 46
8.3 Overview of SIMULATION UNIT approvals ..... 47
8.4 Mechanical stability (in operation) SIMULATION UNIT ..... 47

# 1 Introduction

## 1.1 Introduction to the SIMULATION UNIT

**Purpose of the Operating Instructions (compact)**

These operating instruction (compact) contain information with you will be able to install and connect up a device of the SIMULATION UNIT product line.

**Validity of the Operating Instructions (compact)**

These Operating Instructions (compact) are valid for the Product line SIMULATION Product group SIMULATION UNIT.

**Names of the devices in these operating instructions**

| Classification | Description | Terms used |
|---|---|---|
| Product line | For all devices and variants of all product groups within the SIMULATION UNIT product line, the term SIMULATION UNIT is used | SIMULATION Hardware |
| Product group | For all devices and variants of a product group, only the product group is used. | SIMULATION UNIT |
| Device | For a device, only the device name is used. | SIMULATION UNIT |
| Variant | For a variant of the device, the device name has the appropriate variant added to it in brackets (Profinet) | (-) |
| All variants of a device | For all variants of the device, the device name has (all) added to it. | (-) |

**Where ca I find more detailed information on the product ?**

A CD is supplied with the SIMULATION UNIT on which you will find a detailed description of the products in PDF format in the relevant subfolder.

## 1.2 Produktgroup SIMULATION UNIT

| Produktlinie | Produkt-gruppe | Gerät | (Variante) | [Bestellnummer] |
|---|---|---|---|---|
| SIMULATION Hardware | SIMULATION UNIT | SIMULATION UNIT PN | (Profinet 128) | 9AE4120-2AA00 |
| SIMULATION Hardware | SIMULATION UNIT | SIMULATION UNIT PN | (Profinet 256) | 9AE4120-2AB00 |
| SIMULATION Hardware | SIMULATION UNIT | SIMULATION UNIT PB | (Profibus, 2 kanalig) | 9AE4122-2AA00 |

## 1.3 Type designations

**Structure oft he type designation**

The type designation of a SIMULATION UNIT is made up of several parts that have the following meaning:

| | | |
|---|---|---|
| 9AE4120-2AA00 | SIMULATION UNIT PN | Profinet simulates max. 128 device |
| 9AE4120-2AB00 | SIMULATION UNIT PN | Profinet simulates max. 256 device |
| 9AE4122-2AA00 | SIMULATION UNIT PB | Profibus 2 channel<br>simulats max. 125 device<br>on each channel |

# 2 Safety notes

## 2.1 Important notes on using the SIMULATION UNIT product family

**Safety notices on the use of the devices**

The following safety notices must be adhered to when setting up and operating the device and during all associated work such as installation, connecting up, replacing devices or opening the device.

**General information**

| ⚠ **WARNING** |
|---|
| Safety extra low voltage<br><br>The equipment is designed for operation with Safety Extra-Low Voltage (SELV) by a Limited Power Source (LPS). (This does not apply to 100 V … 240 V devices.)<br><br>This means that only SELV / LPS (Limited Power Source) complying with IEC 60950-1 / EN60950-1 / VDE 0805-1 must be connected to the power supply terminals. The power supply unit for the equipment power supply must comply with NEC Class 2, as described by the National Electrical Code ® (ANSI / NFPA 70).<br><br>There is an additional requirement if devices are operated with a redundant power supply:<br><br>If the equipment is connected to a redundant power supply (two separate power supplies), both must meet these requirements. |

| ⚠ **WARNING** |
|---|
| Opening the device<br><br>DO NOT OPEN WHEN ENERGIZED |

**General notices regarding use in hazardous areas**

| ⚠ **WARNING** |
|---|
| Risk of explosion when connecting or disconnecting the device<br><br>EXPLOSION HAZARD<br><br>DO NOT CONNECT OR DISCONNECT EQUIPMENT WHEN A FLAMMABLE OR COMBUSTIBLE ATMOSPHERE IS PRESENT |

| ⚠ **WARNING** |
| --- |
| Replacing components<br><br>EXPLOSION HAZARD<br><br>SUBSTITUTION OF COMPONENTS MAY IMPAIR SUITABILITY FOR CLASS I; DIVISION „ OR ZONE.. |

| ⚠ **WARNING** |
| --- |
| Requirements for the cabinet/enclosure<br><br>When used in hazardous environments corresponding to Class I, Division 2 or Class I, Zone 2, the device must be installed in a cabinet or a suitable enclosure. |

**Notices for use in hazardous areas according to ATEX**

| ⚠ **WARNING** |
| --- |
| Requirements for the cabinet/enclosure<br><br>To comply with EU Directive 94/9 (ATEX95), this enclosure must meet the requirements of at least IP54 in compliance with EN 60529. |

| ⚠ **WARNING** |
| --- |
| Suitable cables for temperatures in excess of 70 °C<br><br>In the cable or conduit entry point exceeds 70°C or the branching point of conductors exeeds 80°C, special precautions must be taken. If the equipment is operated in an air ambient in excess of 50°C, only use cables with admitted maximum operating temperature of at least 80°C. |

| ⚠ **WARNING** |
| --- |
| Protection against transient voltage surges<br><br>Provisions shall be made to prevent the rated voltage from being exceeded by transient voltage surges of more than 40%. This criterion is fulfilled, if supplies are derived from SELV (Safety Extra-Low Voltage) only. |

## 2.2 Important notes on using the device in hazardous areas

| ⚠ **WARNING** |
| --- |
| WARNING – EXPLOSION HAZARD –<br><br>DO NOT DISCONNECT WHILE CIRCUIT IS LIVE UNLESS AREA IS KNOWN TO BE NON-HAZARDOUS |

| ⚠ **WARNING** |
| --- |
| Restricted area of application<br><br>This equipment is suitable for use in Class I, Division 2, Groups A, B, C and D or non-hazardous locations only. |

| ⚠ **WARNING** |
| --- |
| Restricted area of application<br><br>This equipment is suitable for use in Class I, Zone 2, Group IIC or non-hazardous locations only. |

# 3 Description

## 3.1 Unpacking and checking

**Unpacking, Checking**

1. Make sure that the package is complete.
2. Check all the parts for transport damage.

| ⚠ **WARNING** |
| --- |
| Do not use any parts that show evidence of damage ! |

## 3.2 SIMULATION UNIT components of the product

Note
When shipped, the slots for the media modules have a dummy cover fitted.

| Device: | Variant | Plug-in terminal block | | Device | BAK | Product CD |
| --- | --- | --- | --- | --- | --- | --- |
| | | Digital I/O | Power supply | | | |
| SIMULATION UNIT | (PN) | 2-pol | 2-pol | x | | x |
| SIMULATION UNIT | (PB) | 6-pol | 2-pol | x | | x |

## 3.3 Product group SIMULATION UNIT

### 3.3.1 SIMULATION UNIT PN

**Possible attachments**

3 electrical Ethernet RJ45 jacks (with securing collar) for connection of end devices or other network segments

1 USB Master connector

1 plug-in terminal block 4-pin for connecting the power supply and the digital in/Outputs




Bild 1 SIMULATION UNIT PN

### 3.3.2 SIMULATION UNIT PB

Possible attachments

3 electrical Ethernet RJ45 jacks (with securing collar) for connection of end devices or other network segments

1 USB Master connector

1 plug-in terminal block 4-pin for connecting the power supply and the digital In/Outputs

1 plug-in terminal block 4-pin for connecting the digital in/Outputs

2 plugs 9-pol SUB-D to connect the Profibus


SIEMENS
BAN1 AGENT
RES
DI DO
SGND
SGND
DI DO
DI DO
SGND
M
L
NEC CLASS2

## 3.4 Ethernet Ports Network P1 und P2

N1 and N2 are the two Profinet ports. These ports can be used to connect the Profinet fieldbus. The connection have a maximum speed of 100Mbit/s.

In the SIMULATION UNIT PB this two port are out of function.

In the SIMULATION UNIT PN only P1 is used.
P2 is reserved for future applications.

## 3.5 Control Port

Ctrl: RJ45 Ethernet Port
connect the SIMULATION UNIT (all) to a PC with the engineering software SIMULATIONUnit via this port. The connection is designed for a maximum speed of 1000Mbit/s

By security reason, the simulation POC should not be connected to the Internet.

## 3.6 USB Host



The hardware contains one USB host port. Mass storage devices can be connected here.
The standards USB 1.1 und USB 2.0 are supported.
The USB interface provide a power supply for connected devices with max. 500mA.

## 3.7 Profibus Port

9-pol SUB-D plug, male:
PB1 and PB2 are the two Profibus ports.
On this ports the the fieldbus Profibus can be connected. The connection is designed for a maximum speed of 12,5Mbit/s

## 3.8 Micro SD Karte

At the back side of the housing there is a metal cover which can be removed. There is a micro SD card slot behind the cover.
The standards SD and SDHC are supported with a maximum capacity of 32 GB.

### 3.8.1 Position of the Micro SD Memory Card

| **CAUTION** |
| --- |
| The Micro SD memory card is only for internal use and special debug and update functions..<br>The Micro SD memory card should not be removed or inserted by the user. |

In the SIMULATION UNIT Agent, the Micro SD memory card is located behind the sealing screw on the rear of the device. To remove the sealing screw, use a coin or a wide blade screwdriver.



## 3.9 Digital I/O in SIMULATION UNIT PN

The hardware has 1 connectors which can be used as a digital input or a digital output.

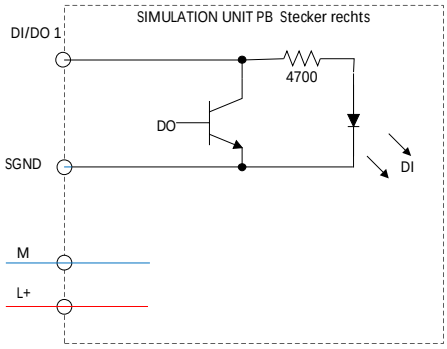


DI/DO: digital Input or digital Output
SGND: SignalGround

**Input:**

log. 0: contact open or 0V
log. 1: 24V, max. 50mA

**Output:**

The Output can max drive 50mA.
log. 0: internal 10kOhm resistor against ground
log. 1: Output will be connected to ground by a Phototransistor

## 3.10 Digital I/O in SIMULATION UNIT PB

The hardware has 1 connectors which can be used as a digital input or a digital output.

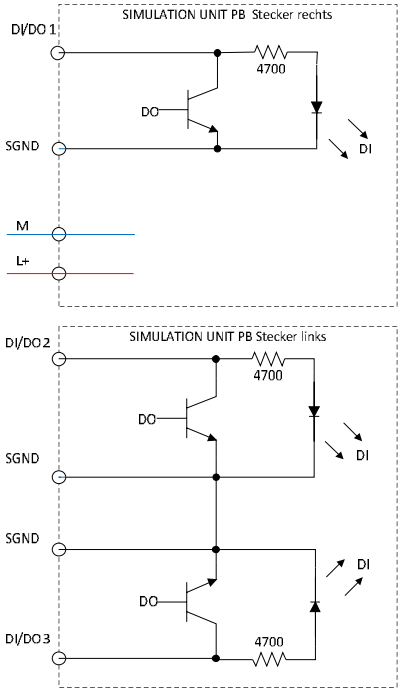


DI/DO: digital Input or digital Output
SGND: SignalGround

**Input:**

log. 0: contact open or 0V
log. 1: 24V, max. 50mA

**Output:**

The Output can max drive 50mA.
log. 0: internal 10kOhm resistor against ground
log. 1: Output will be connected to ground by a Phototransistor

## 3.11 Description of the LEDs

**Power (PWR)**: Lights up green when the power supply is connected.

**Ready (RDY)**: Flashes green during startup, when the power is restored or after a reset, and lights up green when the module is ready.
The module is not ready for use until the StartUP LED lights up.

**Control (CTRL)**: Lights up green if a link to the network has been established. Flashes orange at data exchange.

**LEDs for Ethernet ports P1, P2, SIMULATION UNIT PN only:**
Lights up green if a 100MBit/s link at the Profinet network has been detected. Flashes orange when data is received.

**LEDs for Ethernet ports N1, N2, SIMULATION UNIT PB only:**
Lights up green if a 100MBit/s link at the network has been detected. Flashes green if a 1GBit/s link has been detected. Flashes orange when data is received.

**LEDs for Profibus ports PB1 and PB2:** Lights up green if a link to the Profibus network has been detected. Flashes green if traffic has been detected. Flashes orange when data is received.

## 3.12 The Buttom

There is a reset button below the USB port.
After a reset, the box is reset and switches to startup mode.
While the startup LED is flashing, the box cannot be accessed from the Web interface or via the simulation PC.

# 4 Assembling

## 4.1 Installation

| ⚠ **WARNING** |
|---|
| Suitable installation location at temperatures above 50°C<br><br>If a device is operated in an ambient temperature of more than 50°C, the temperature of the device housing may be higher than 70°C. |

| ⚠ **WARNING** |
|---|
| Use of approved components<br><br>• Use only approved components, for example supporting brackets, SFPs, 19-inch-racks<br>• Create any supports you require according the dimension drawing |

| ⚠ **WARNING** |
|---|
| Suitable cables for temperatures in excess of 70 °C<br><br>In the cable or conduit entry point exceeds 70°C or the branching point of conductors exceeds 80°C, special precautions must be taken. If the equipment is operated in an air ambient in excess of 50°C, only use cables with admitted maximum operating temperature of at least 80°C. |

| ⚠ **CAUTION** |
|---|
| Provide suitable shade to protect the Bus Analyser against direct sunlight. This avoids unnecessary warming of the SIMULATION UNIT and prevents premature aging of the Bus Analyser and cabling. |

| **NOTICE** |
|---|
| When installing and operating the device, keep to the installation instructions and safety-related notices as described in this document and in the manual SIMATIC NET Industrial Ethernet Twisted Pair and Fiber Optic Networks. |

## 4.2 Installation options

**Installing the SIMULATION UNIT**

The SIMULATION UNIT can be installed in various ways::

- Installation on a 35 mm DIN rail
- Installation on a SIMATIC S7-300 standard rail
- Wall mounting

For the possible types of installation, refer to the section „General Installation“ in this document.

## 4.3 General installation

### 4.3.1 Installation on a DIN rail

| **CAUTION** |
| --- |
| If the SIMULATION UNIT is liable to be subjected to serve vibration (> 10 g), use an S7-300 standard rail for installation. The DIN rail does not provide adequate support if vibration exceeds 10 g. |

| ⚠ **WARNING** |
| --- |
| When used in shipbuilding, installation on a 35 mm DIN rail is not permitted.<br><br>In ships, the 35 mm DIN rail does not provide adequate support.<br><br>Valid only for the appropriately marked devices in the various product groups. This is indicated by a note in the installation options table. Refer to the relevant table in the section Technical specification (subsection, construction, installation and environment). |

**Installation**

Install the SIMULATION UNIT on a 35 mm DIN rail complying with DIN EN 50022.

1. Hang the SIMULATION UNIT on the DIN rail and then push it in against the rail until it clips into place..
2. Fit the connectors for the power supply.
3. Fit the connectors for the digital In/Outputs.
4. Insert the terminal blocks into the sockets on the SIMULATION UNIT.



**Removing**

To remove an SIMULATION UNIT from the DIN rail:

1. Disconnect all cables from the SIMULATION UNIT
2. Release the lower part of the switch away from the DIN rail.

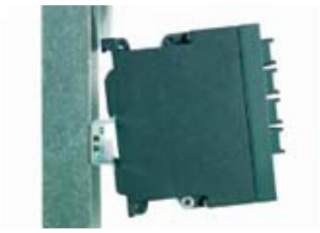

### 4.3.2 Installation on a standard rail

**Installation on a SIMATIC S7-300 standard rail**

1. Place the upper guide at the top of the SIMULATION UNIT housing in the S7 standard rail.
2. Screw the SIMULATION UNIT to the underside of the standard rail.
3. Fit the connectors for the power supply.
4. Fit the connectors for the signaling contact.
5. Insert the terminal blocks into the sockets on the SIMULATION UNIT.




**Uninstalling**

To remove an SIMULATION UNIT from the SIMATIC S7-300 standard rail:

1. First disconnect all connected cables.
2. Loosen the screws on the underside of the S7 standard rail and lift the SIMULATION UNIT away from the rail.

### 4.3.3 Wall mounting

**Wall mounting**

1. For wall mounting, use suitable mounting fittings for the wall (for example, for a concrete wall, four plugs 6 mm diameter and 30 mm long, 4 screws 3,5 mm diameter and 40 mm long).
2. Connect the electrical cable connecting cables.
3. Fit the connectors for the digital In/Outputs.
4. Insert the terminal blocks into the sockets on the SIMULATION UNIT.

**Note**

For more exact dimensions, please refer to the section „Dimension drawings“.

**Note**

The wall mounting must be capable of supporting at least four times the weight of the SIMULATION UNIT.

# 5 Connecting

## 5.1 Notes on commissioning

| **NOTICE** |
| --- |
| Commissioning devices with redundancy mechanisms.<br><br>If you use redundancy mechanisms, open the redundant path before you insert a new or replacement device in an operational network. A bad configuration or attachment of the Ethernet cables to incorrectly configured ports causes overload in the network and a breakdown in communication. |

## 5.2 Power supply - general

| ⚠ **WARNING** |
| --- |
| You can recognize the type of power supply on a warning on the device and the labeling of the connector to the power supply. |

## 5.3 Power supply

### 5.3.1 Connecting the power supply

24 V safety extra-low voltage (SELV)

**WARNING**

- The SIMULATION UNIT is designed for operation with Safety Extra Low Voltage (SELV). This means that only SELV complying with IEC 60950-1 / EN60950-1 / VDE0805 can be connected to the power supply terminals.
- The power supply unit for the SIMULATION UNIT power supply must meet NEC Class 2 as described by the National Electrical Code ® (ANSI/NFPA 70).
- The power of all connected power supply units must total the equivalent of a power source with limited power (LPS limited power source).
- If the device is connected to a redundant power supply (two separate power supplies), both power supplies must meet these requirements.
- The digital In/Outputs can be subjected to a maximum load of 50 mA (safety extra-low voltage (SELV), DC 24 V).
- Never operate the device with AC voltage or DC voltage higher than 32 V DC.

**CAUTION**

If the SIMULATION UNIT are supplied over long 24 V power supply lines or networks, measures are necessary to prevent interference by strong electromagnetic pulses on the supply lines. These can result, for example, due to lightning or switching of large inductive loads.

One of the tests used to attest the immunity of devices of the SIMULATION UNIT electromagnetic interference is the “surge immunity test” according to EN61000-4-5. This test requires overvoltage protectionfor the power supply lines. A suitable device is, for example, the Dehn Blitzductor VT AD 24V Art-Nr. 918 402 or comparable protective element.

Vendor: DEHN+SÖHNE GmbH+Co.KG, Postfach 1640, D-92306 Neumark, Germany.

**Connecting to the supply voltage (SELV)**

The power supply is connected using a 4-pin plug-in terminal block.
The power supply is connected over a high resistance with the enclosure to allow an undergrounded set up. The two power inputs are non-floating.

The power is not buffered. In case of protection of data loss a bufferd powers supply must be used.

Terminal block assignment (4-pin)

**Pinout of the safety extra-low voltage (SELV)**

| Pin number | Assignment (24 VDC) | | Labeling |
|---|---|---|---|
| DI/DO | In/Output 24 V DC | |  |
| SGND | Ground for In/Output | | |
| M | Ground power supply | | |
| L+ | Power, 24 V DC | | |



To wire up the power connector, use a copper cable of category 18 - 12 AWG or cable with a cross-section of 0.75 to 2.5 mm².

### 5.3.2 24 V DC – product group SIMULATION UNIT

24 V safety extra-low voltage overview

| Product group | Device: | (Variant) | Safety extra-low voltage (SELV) |
|---|---|---|---|
| SIMULATION Hardware | SIMULATION UNIT | (all) | 24 V DC |
| | | | |

## 5.4 Digital In/Outputs

The digital Inputs and Outputs are floating switches by breaking the contact.

**Connecting the digital In/Outputs**

The digital In/Outputs contacts are connected to a 4-pin plug-in terminal block.
The digital In/Outputs can be subjected to a maximum load of 50 mA (safety extra low voltage SRLV 24 VDC).

| Pin number | Assignment (24 VDC) | | Labeling |
|---|---|---|---|
| DI/DO | In/Output 24 V DC | |  |
| SGND | Ground for In/Output | | |
| M | Ground power supply | | |
| L+ | Power, 24 V DC | | |



| Pin number | Assignment (24 VDC) | | Labeling |
|---|---|---|---|
| DI/DO | In/Output 24 V DC | | 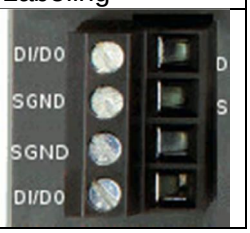 |
| SGND | Ground for In/Output | | |
| SGND | In/Output 24 V DC | | |
| DIDO | Ground for In/Output | | |

## 5.5 Connecting functional ground

**Installation on a DIN rail**

The device is grounded over the DIN rail.

**S7 standard rail**

The device is grounded over the rear panel and the neck of the screw.

**Wall mounting**

The device is grounded by the securing screw in the unpainted hole..

Please note that the SIMULATION UNIT must be grounded over one securing screw with minimum resistance.

If a SIMULATION UNIT is mounted on a non-conducting base, a grounding cable must be installed. The grounding cable is not supplied with the device. Connect the paint-free surface of the SIMULATION UNIT to the nearest grounding point using the grounding cable.

# 6 Technical data

**Note**

**Validity oft he technical specifications**

All the technical specifications described in this section that is not assigned to a specific device variant, version or a media module, apply to all devices variants/versions of the product group.

## 6.1 Construction, installation and environmental conditions

Construction

| | SIMULATION UNIT PB | SIMULATION UNIT PN |
|---|---|---|
| Dimension (W x H x D) | 60 x 125 x 125 mm | 40 x 125 x 125 mm |
| Weight | 1 400 g | 1 100 g |
| Degree of protection | IP20 | IP20 |

Installation options

| | |
|---|---|
| Installation options | • DIN rail<br>• S7-300 standard rail<br>• Wall |

Note: When used in shipbuilding, installation on a 35 mm DIN rail is not permitted. In ship, the 35 mm DIN rail does not provide adequate support.

| Storage/transport temperature | Operating temperature | Max. relative humidity in operation at 25°C | Max. ambient temperature at operating altitude |
|---|---|---|---|
| -40°C … +70°C | Horizontal installation:<br>-40°C … +70°C<br><br>Vertical installation:<br>-40°C … +50 °C | < 95 % (no condensation) | Horizontal installation:<br>Max. 65°C as of 2000m<br>Max. 60°C as of 3000m<br><br>Vertical installation:<br>Max. 45°C as of 2000m<br>Max. 40°C as of 3000m |
| | | | |
| | | | |

The permitted operating temperature depends on how the mounting device was installed. The installationis horizontal if the device labeling is from left to right. With a vertical installation, the device labeling is rotated through 90°..

## 6.2 Connectors and electrical data

Connection for end devices or network components

| (SIMULATION UNIT (all) | |
|---|---|
| Ethernet, Twisted pair | 3 x RJ45-jacks with MDI-X-assignment<br>10/100/1000 Mbit/s (half-/full duplex) |
| USB | 1 x USB, 1.0 or 2.0 |

Electrical data: Power supply

| Device version (power supply) | Redundant power supply unit | Redundant power supply possible | Power supply |
|---|---|---|---|
| SIMULATION UNIT (all) | No | No | 24 V DC |
| | | | |

Electrical data: Current consumption and power loss

| Device version (power supply) | Current consumption | Effective power loss |
|---|---|---|
| SIMULATION UNIT PN | 0,30 mA | 7,2 W |
| SIMULATION UNIT PB | 0,50 mA | 12 W |

Electrical Data: Overcurrent protection

| Device version (power supply) | Overcurrent protectionof the power supply Non-replaceable fuse |
|---|---|
| SIMULATION UNIT PN | 2 A / 32 V |
| SIMULATION UNIT PB | 2 A / 32 V |

Electrical data: Digital In/Output

| Device version (power supply) | Voltage via digital In/Output | Switching capacity (resistive load) |
|---|---|---|
| SIMULATION UNIT (all) | 24 V DC | 50 mA |
| | | |

Electrical data: USB Port

| Device version (power supply) | Voltage via USB port | Current load maximum |
|---|---|---|
| SIMULATION UNIT (all) | 5 V DC | 500 mA |
| | | |

Plug-in terminal block for connectors of the power supply and signaling contact

| Device version (power supply) | Spannungsversorgung | Digital Ein/Ausgänge |
|---|---|---|
| SIMULATION UNIT PN | 1 x 4-pin Power supply and one digital In/Output | Together with the power supply block |
| (SIMULATION UNIT PB | 1 x 4-pin and one digital In/Output | 1 x 4-pin and two digital In/Output |

## 6.3 Cable lengths

Permitted cable lengths (copper cable – Fast Ethernet)

| Cable type | Accessory (Plug, Outlet, TP Cord) | Permitted cable length |
|---|---|---|
| IE TP Torsion Cable | Mit IE FC Outlet RJ45<br>+ 10m TP Cord | 0 … 45 m<br>+ 10 m TP Cord |
| | Mit IE FC RJ45 Plug 180 | 0 … 55 m |
| IE FC TP Marine Cable<br>IE FC TP Trailing Cable<br>IE FC TP Flexible Cable | Mit IE FC Outlet RJ45<br>+ 10m TP Cord | 0 … 75 m<br>+ 10 m TP Cord |
| | Mit IE FC RJ45 Plug 180 | 0 … 85 m |
| IE FC TP Standard Cable | Mit IE FC Outlet RJ45<br>+ 10m TP Cord | 0 … 90 m<br>+ 10 m TP Cord |
| | Mit IE FC RJ45 Plug 180 | 0 … 100 m |

Zulässige Leitungslängen (Kupferleitung – Gigabit Ethernet)

| Leitungstyp | Accessory (Plug, Outlet, TP Cord) | Permitted cable length |
|---|---|---|
| IE FC Standard Cable,<br>4 x 2, AWG24<br>IE FC Flexible Cable,<br>4 x 2, AWG24 | with IE FC RJ45 Plug 180,<br>4 x 2 | 0 … 90 m |
| IE FC Standard Cable,<br>4 x 2, AWG22 | with IE FC Outlet RJ45<br>+ 10 m TP Cord | 0 … 90 m<br>+ 10 m TP Cord |
| IE FC Flexible Cable,<br>4 x 2, AWG22 | with IE FC Outlet RJ45<br>+ 10 m TP Cord | 0 … 90 m<br>+ 10 m TP Cord |

## 6.4 Other properties

Mean Time between failure (MTBF)

| MTBF | |
|---|---|
| SIMULATION UNIT PN | ➢ 40 years |
| SIMULATION UNIT PB | ➢ 40 years |

# 7 Dimension drawings

## 7.1 SIMULATION UNIT PN

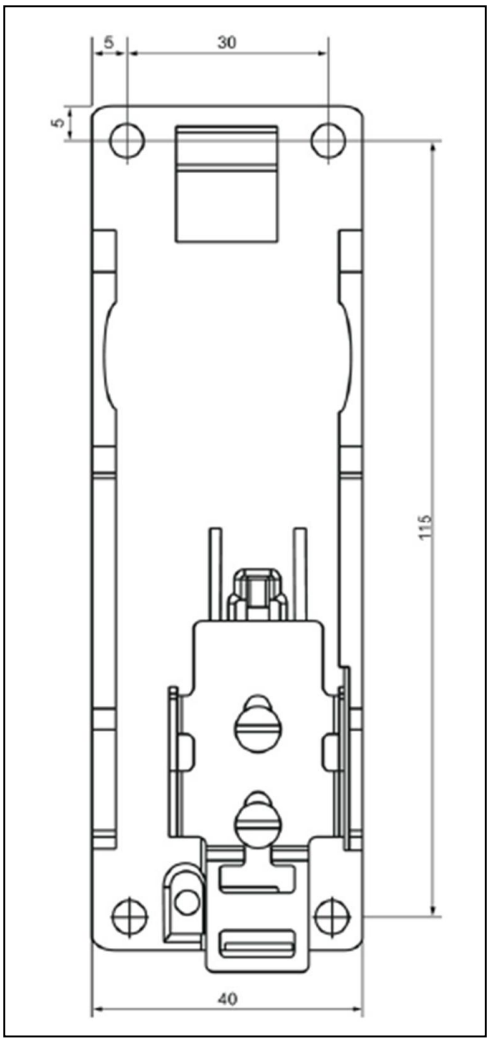

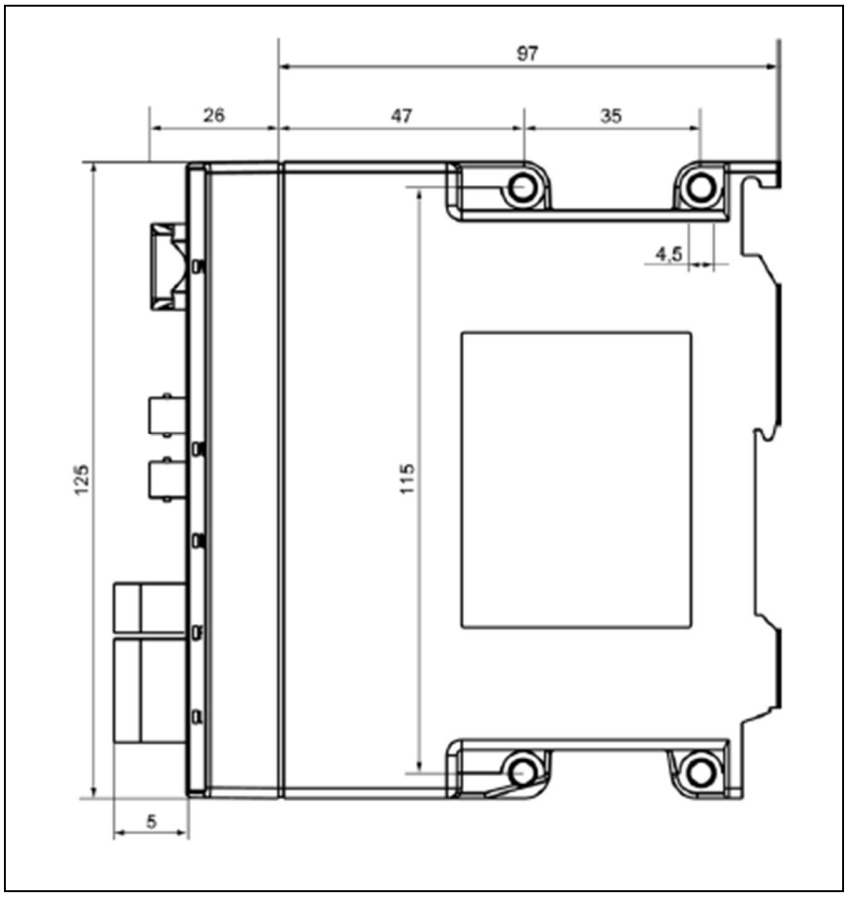
97
26
47
35
4,5
125
115
5

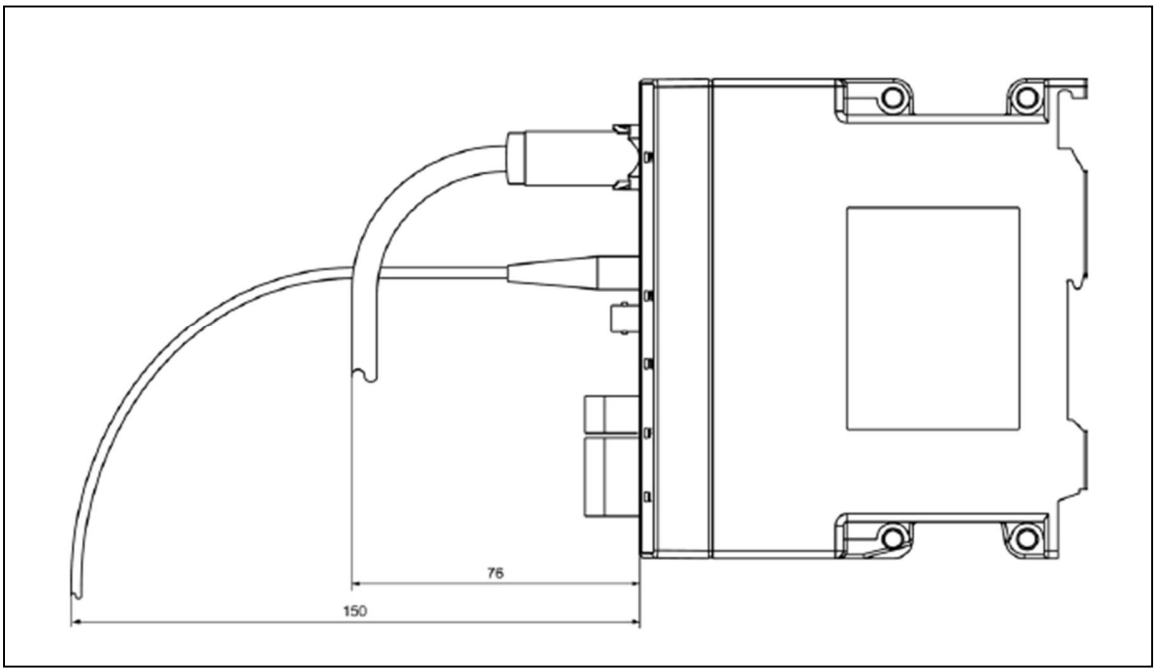
76
150

## 7.2 SIMULATION UNIT PB

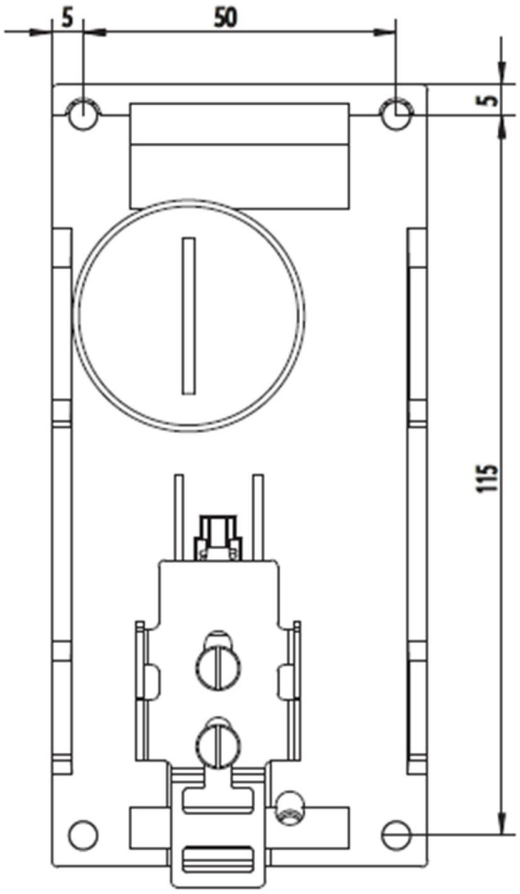

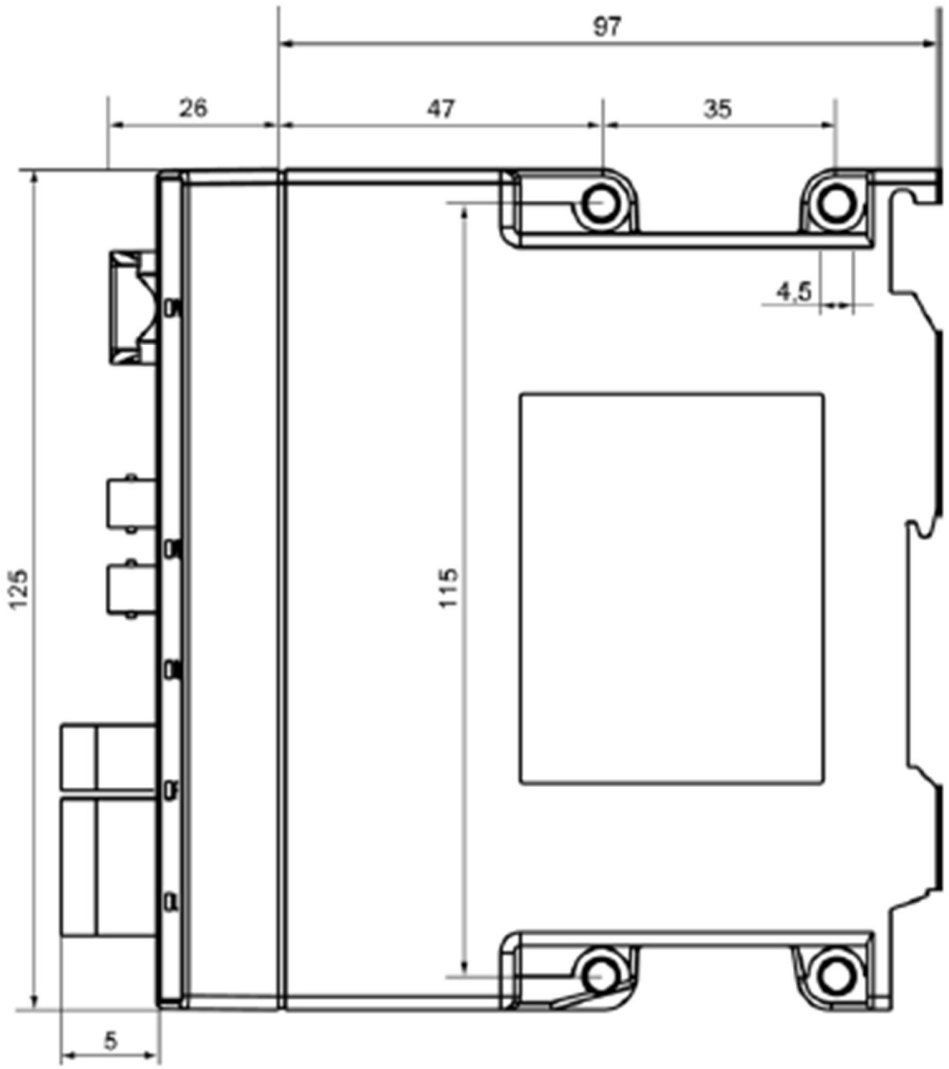
97
26
47
35
4,5
125
115
5

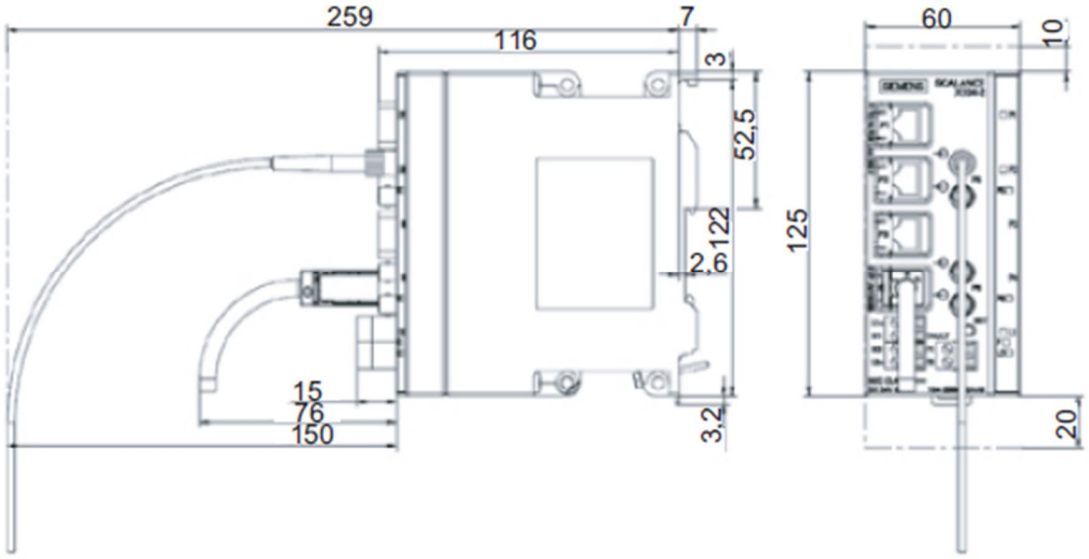
259
116
7
3
52,5
122
2,6
15
76
150
3,2
125
60
10
20

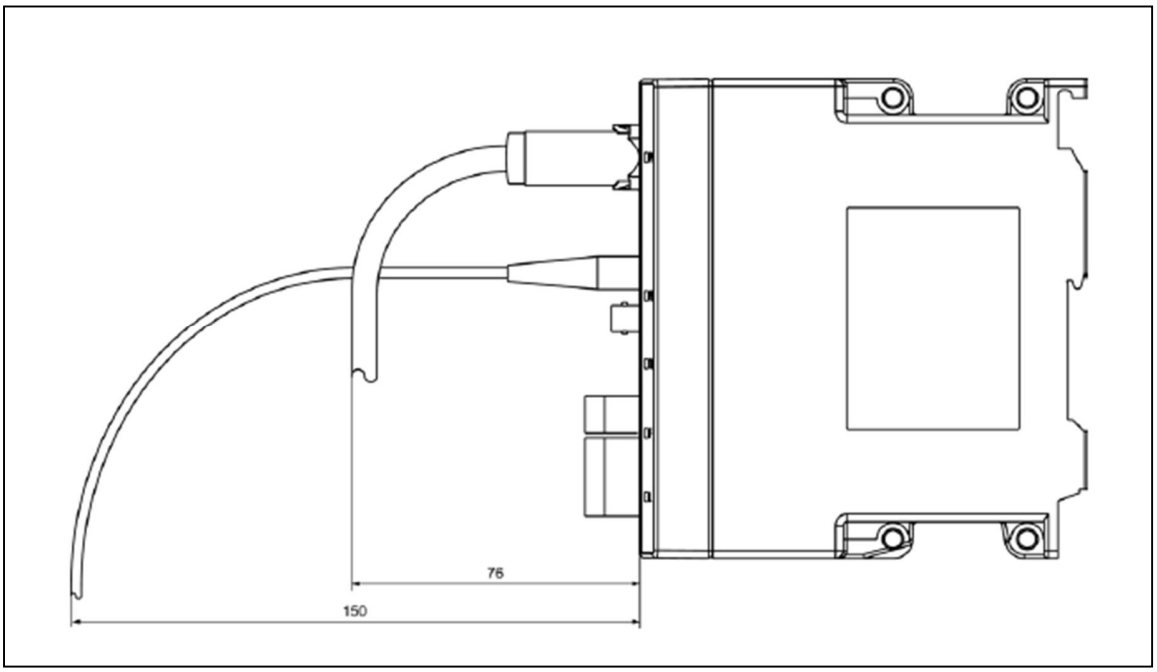
76
150

# 8 Approvals

## 8.1 SIMULATION UNIT approvals, certificates

**Not**

The specified approvals only when the corresponding mark is printed on the product. You can check which of the following approvals have been granted for your product by the markings on the type plate.

**EC directives**

SIMATIC NET products meet the requirement and aims of the following EC directives.

**EMC directive (electromagnetic compatibility)**

The SIMATIC NET product meets the requirement of the EC Directive: 2004/108/EG „electromagnetic compatibility“

The product is designed for use in the following areas:

| **Area of application** | **Requirements** | |
|---|---|---|
| | **Emission** | **Immunity** |
| Industrial area | EN 61000-6-4: 2011 | EN 61000-6-2: 2005 |

| ⚠ **WARNING** |
|---|
| Personal injury and damage to property occur.<br><br>The installation of expansions that are not approved for SIMATIC NET products or their target systems may violate the requirements and regulations for safety and electromagnetic compatibility.<br><br>Only use expansions that are approved for the system. |

**-Kepp to the installation guidelines**
The product meets the requirements if you adhere to the installation and safety instructions contained in this documentation and in the following documentation when installing and operating the product.

**-You can always find the latest documentation on the Internet !**
The current description of the currently available products can always be found on the Internet under specified entry IDs/Internet pages:
SIMATIC NET Industrial Twisted Pair and Fiber Optic Networks Manual 8763736
EMC Installation Guideline, Planning Guide 28518276

**-Working on the product**
To protect the product from electrostatic discharge, personnel must first discharge any electrostatic charge from their body before touching the product.

**Note**
Note for the manufacturers of machines
This product is not a machine in the sense of the EC Machinery Directive. There is therefore no declaration of conformity relating to the EC Machinery Directive 2006/42/EEC for this product.

## Machinery directive

The product is a component in compliance with the EC 2006/42/EG. According to the machinery directive, we are obliged to point out that the product described is intended solely for installation in a machine.
Before the final product can be put into operation, it must be tested to ensure that it confirms with the directive 2006/42/EEC.

**Note**
Note for the manufacturers of machines

This product is not a machine in the sense of the EC Machinery Directive. There is therefore no declaration of conformity relating to the EC Machinery Directive 2006/42/EEC for this product.

## Note for manufacturers of machines

This product is not a machine in the sense of the EC Machinery Directive. There is therefore no declaration of conformity relating to the EC Machinery Directive 89/392/EEC for this product.

## Explosion protection directive (ATEX)

The SIMATIC NET products meets the requirements of the EC directive 94/9/EC “Equipment and Protective Devices for Use in Potentially Explosive Atmospheres”.

**WARNING**

When using (installing) SIMATIC NET products in hazardous area zone 2, make absolutlely sure that the associated conditions are adhered to:

- Approval of SIMATIC/SIMATIC NET Products for Direct Installation in Ex-Zone 2“

You will find this on the Internet on the pages of Siemens Industry Automation Customer Support under the following entry ID:

33118441 (http://support.automation.siemens.com/WW/view/de/33118441)
„Entry list“ tab > entry type „Certificates“

ATEX Code:
II 3 G Ex nA II T4 KEMA 07 ATEX 0145X

The product meets the requirements oft he standards

EN 60079-15: 2005 (Electrical apparatus for potentially explosive atmospheres; Type of protection „n“)
Und EN 60079-0: 2006

## FM approval

The product meets the requirements of the standards

Factory Mutual Approval Standard Class Number 3611
FM Hazardous (Classified) Location Electrical Equipment:
Non Incendive / Class I / Division 2 / Group A, B, C, D / T4 und
Non Incendive / Class I / Zone 2 / Group IIC / T4

## Notice for Australia

The product meets the requirements of the AS/NZS 2064 standard (Class A).

**cULus Approval for Information Technology Equipment**

cULus Listed 60E9 I. T. E.
Underwriters Laboratories Inc. complying with

- UL 60950-1 (Information Technology Equipment)
- CSA C22.2 No. 60950-1-03

**cULus Approval Hazardous Location**

cULus Listed 21BP I. T. E. FOR HAZ. LOC.
Underwriters Laboratories Inc. complying with

- UL 60950-1 (Information Technology Equipment)
- CSA C22.2 No. 60950-1-03
- UL 1604 und UL 2279
  or ANSIISA 12.12.01

Approved for use in
Cl. 1, Div. 2, GP. A, B, C, D, T4
Cl. 1, Zone 2, GP. IIC T4

## 8.2 SIMULATION UNIT Conformity certificates

**Declaration of Conformity**

You will find the EC Declaration of Conformity for these products on the Internet at the following address:
http://support.automation.siemens.com/WW/view/de/33118441
(http://support.automation.siemens.com/WW/view/de/33118441)

-Entry list
-Entry type „Certificates“
-Certificate type „Declaration of Conformity“

Example German: „EG-Konformitätserklärung SCALANCE X310“.
Example English: „Declaration of Conformity SCALANCE X310“.

## 8.3 Overview of SIMULATION UNIT approvals

Overview oft the approvales

| Device: SIMULATION UNIT | (Variant) | c-UL-us | c-UL-us for Hazardous Location | FM (1) | C-TICK | CE | ATEX95 Zone 2 (1) | E1 |
|---|---|---|---|---|---|---|---|---|
| | | UL 60950 1<br>CSA C22.2 Nr. 60950 1 | UL 1604 and UL2279 or ANSI/ISA 12.12.01<br><br>CSA C22.2 No. 213-M1987<br><br>Cl. 1, Zone 2, GP. IIC, T.. | FM3611 Cl. 1, Div. 2 GP. A, B, C, D, T..<br><br>Cl. 1, Zone 2, GP. IIC.T..<br><br>Cl. 1, Zone 2, GP. IIC, T.. | AS/NZS 2064 (Class A) | EN 6100-6-4 Class A, EN 61000-6-2 | EN 60079-15 : 2005, EN 60079-0 : 2006<br>II 3 G Ex nA II T..<br>KEMA 07 ATEX 0145X | - |
| PN | (-) | X | - | - | - | X | - | - |
| PB | (-) | X | - | - | - | x | - | - |

1)
For temperature information “T..” or the maximum ambient temperature “Ta:..”), refer to the type plate.

**Note**
Shipbuilding approval
No applications for shipbuilding approvals will be made for the SIMULATION UNIT

## 8.4 Mechanical stability (in operation) SIMULATION UNIT

| Device: | (Variant) | IEC 60068-2-6 vibration | IEC 60068-2-27 shock |
|---|---|---|---|
| | | 5 – 9 Hz: 3,5mm<br>9 – 150 Hz: 1g<br>1 octace/min, 20 Sweeps | 15 g, 11 ms duration<br>6 shocks per axis |
| SIMULATION UNIT (all) | (with TAP) | x | x |
| | | | |