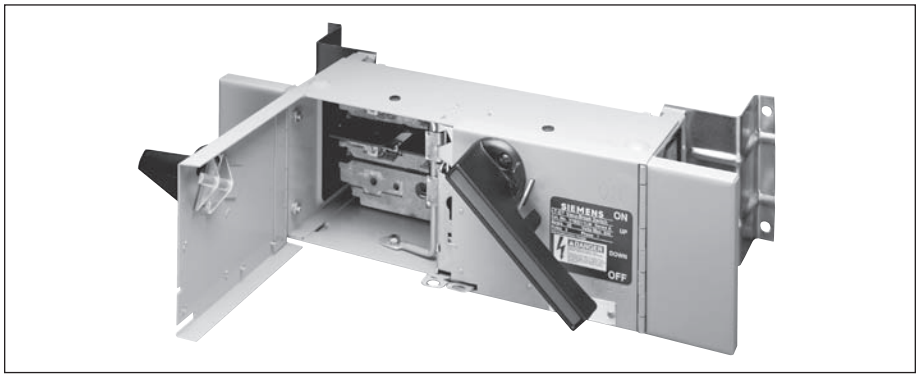


## Features

**Exclusive Vacu-Break® Clampmatic Arc Control —** Hazardous switching arcs are safely confined and controlled in the Vacu-Break chamber.

**NEMA Phasing —** All line connections are phased as per NEMA Standards, i.e., left to right and top to bottom as you face the unit.

**Pressure Terminal Connectors —** Suitable for aluminum or copper (100 Amps or larger). All Terminal Connectors 200 Amps and larger are removable.

**Connection Screws —** Bullet nosed for positive location and seating of screw.

**Quick-Make Quick-Break —** Assured by design of cam mechanism and powerful springs. Positive operation in "ON"or "OFF" position results from design of the cross arm and Vacu-Break head linkage.

**Easy Mounting —** Mounting feet have captive bullet nosed screws added, which seat quickly and positively, reducing installation time.

**Padlocking Member —** Provides locking of handle in the "ON"or "OFF" position.

**Fibre End Barriers —** Insulated End Barriers prevent damage to wire during installation and are designed with openings large enough to accommodate removable lugs (200 Amps and larger units).

**High Pressure Spring Reinforced Copper Fuse Clips —** Provided extra pressure at the contact points. Fuse clips are removable from the front in 7½" and 10" units and from the rear of 5" units.

**Voidable Cover Interlock —** Permits only authorized personnel to void the door interlock and open door with switch "on." "Fool proof" mechanism will not permit door to be closed unless handle is in the correct position.

## Specifications

### Application

VB Panelboard Switches are intended for use in applications where:

1. Rugged constructions, reliable performance, continuity of service and ease of maintenance are emphasized, or
2. Available fault currents higher than 10,000A are likely to be encountered, in manufacturing plants, mass production industries and commercial, institutional and other large buildings served by network systems or transformers of high capacities.

### Short Circuit Withstand Ratings

Suitable for use on systems capable of delivering not more than 200,000 RMS symmetrical amperes of fault current when Class J or R fuses are installed. 1200A switches are the exception, which are suitable for use on circuits capable of delivering not more than 100,000 RMS symmetrical amperes of fault current when Class L fuses are installed. Also, 100–800A switches with Class T fuses and field adapter kit, which are 200,000 RMS symmetrical rated.

### Fuses

Fusible switches will accept the following UL Class fuses:
Class H
Class K
Class R or J with proper adapter kit
Class L — 800 and 1200A switches
Class T — 100–800 switches with proper adapter kit

### Cover Interlocks

Voidable cover interlocks standard on all switches. Prevents cover from being opened when switch is in the "ON" position.

### UL Listing

Listed by UL under file #E6849 as miscellaneous switches and also suitable for use as service equipment (where applicable). Meets UL98 standard for enclosed and deadfront switches.

### NEMA Specifications

Meets NEMA standard KS-1-2001 for type HD switches.

### Federal Specifications

Meets previous federal specifications W-S-865C for heavy duty switches (Type HD) Type 1 switches — general purpose enclosed (Type 1).



| Switch Rating | Maximum Withstand Ratings — 240V AC | | | | | Maximum Withstand Ratings — 600V AC | | | | |
|---|---|---|---|---|---|---|---|---|---|---|
| | H, K Fuses | R Fuses | J Fuses | L Fuses | T Fuses | H, K Fuses | R Fuses | J Fuses | L Fuses | T Fuses |
| 30–30 | 10,000 | 200,000① | — | — | — | 10,000 | 200,000 | 200,000 | — | — |
| 30–60 | 10,000 | 200,000 | 200,000 | — | — | 10,000 | 200,000 | 200,000 | — | — |
| 60–60 | 10,000 | 200,000 | 200,000 | — | — | 10,000 | 200,000 | 200,000 | — | — |
| 60–100 | 10,000 | 200,000 | 200,000 | — | — | 10,000 | 200,000 | 200,000 | — | 200,000 |
| 100 | 10,000 | 200,000 | 200,000 | — | 200,000 | 10,000 | 200,000 | 200,000 | — | 200,000 |
| 100–100 | 10,000 | 200,000 | 200,000 | — | 200,000 | 10,000 | 200,000 | 200,000 | — | 200,000 |
| 200 | 10,000 | 200,000 | 200,000 | — | 200,000 | 10,000 | 200,000 | 200,000 | — | 200,000 |
| 200–200 | 10,000 | 200,000 | 200,000 | — | 200,000 | 10,000 | — | 200,000 | — | — |
| 400 | 10,000 | 200,000 | 200,000 | — | 200,000 | 10,000 | 200,000 | 200,000 | — | 200,000 |
| 600 | 10,000 | 200,000 | 200,000 | — | 200,000 | 10,000 | 200,000 | 200,000 | — | 200,000 |
| 800 | — | — | — | 200,000② | 200,000② | — | — | — | 200,000 | 200,000 |
| 1200 | — | — | — | 100,000② | — | — | — | — | 100,000 | — |

① 2½" units will not accept Class R or J fuse clip kits and are rated 10,000 AIC max.

② Ratings are for 600V switches and fuses when used on a 240V max. AC system.

# Disconnect Switches

## Type VB Panelboard Units



Fusible Units For SB1, SB2 Switchboards and F1, F2 Panelboards

**Catalog Numbering System**

| V | 7 | E | 3 | 2 | 3 | 3 |
|---|---|---|---|---|---|---|

**Vacu-Break**
Unit

**Width**
2 = 12" 7 = 17" M = 17" (Main)

**Height**
A = 2½" B = 5" E = 7½" F = 10" H = 15" S = 18.75"

**Number of Poles**
2 3

**Voltage Rating**
2 = 240V 6 = 600V

**Amperes**
0 = Single Unit
Double 1 = 30A 2 = 60A 3 = 100A 4 = 200A

**Ampere Rating**
1 = 30A 2 = 60A 3 = 100A 4 = 200A 5 = 400A 6 = 600A

Example: V7E3233 = **Vacu-Break Unit, 17" Wide, 7½" High, 3-Pole, 240 Volts, Double Branch Unit with 100 Amp Rating each side. Suffix letters MS indicate Main Switch.**



## Vacu-Break® Fusible Units

**2-Pole①, 12" Wide** — **240V AC, 250V DC**

| Ampere Rating | Unit Height (inches) | Unit Depth (inches) | Horsepower Rating 240 Volt AC Standard | Horsepower Rating 240 Volt AC Maximum | Horsepower Rating 250 Volt DC | Unit Lug Wire Range (Cu/Al) and Cables Per Pole | Weight (pounds) | Catalog Number |
|---|---|---|---|---|---|---|---|---|
| 30–30 | 2½② | 4½ | 1½ | 3 | 5 | (1)–#14 to #8 (Cu Only) | 5 | V2A2211LR■ |
| 30–30 | 5 | 4½ | 1½ | 3 | 5 | (1)–#14 to #4 | 9 | V2B2211LR■ |
| 30–60 | 5 | 4½ | 1½–3 | 3–10 | 5–10 | (1)–#14 to #2 | 9 | V2B2212LR■ |
| 60–60 | 5 | 4½ | 3 | 10 | 10 | (1)–#14 to #2 | 9 | V2B2222LR■ |
| 100 | 7½ | 6¾ | 7½ | 15 | 20 | (1)–#14 to #1/0 | 14 | V2E2203LR■ |
| 200 | 7½ | 6¾ | 15 | — | 40 | (1)–#6 to 350 kcmil | 19 | V2E2204LR■ |

**3-Pole** — **240V AC, 250V DC**

| Ampere Rating | Unit Height (inches) | Unit Depth (inches) | Horsepower Rating 240 Volt AC Standard | Horsepower Rating 240 Volt AC Maximum | Unit Lug Wire Range (Cu/Al) and Cables Per Pole | Weight (pounds) | Catalog Number |
|---|---|---|---|---|---|---|---|
| **Branch Circuits, 12" Wide Units** | | | | | | | |
| 30–30 | 2½② | 4½ | 3 | 7½ | (1)–#14 to #8 (Cu Only) | 5 | V2A3211■ |
| 30–30 | 5 | 4½ | 3 | 7½ | (1)–#14 to #4 | 9 | V2B3211■ |
| 30–30 | 5 | 4½ | 3 | 7½ | (1)–#14 to #4 | 9 | V2B3211R③■ |
| 30–60 | 5 | 4½ | 3–7½ | 7½–15 | (1)–#14 to #2 | 9 | V2B3212■ |
| 30–60 | 5 | 4½ | 3–7½ | 7½–15 | (1)–#14 to #2 | 9 | V2B3212R③■ |
| 60–60 | 5 | 4½ | 7½ | 15 | (1)–#14 to #2 | 9 | V2B3222 |
| 60–60 | 5 | 4½ | 7½ | 15 | (1)–#14 to #2 | 9 | V2B3222R③■ |
| 100 | 7½ | 6¾ | 15 | 30 | (1)–#14 to #1/0 | 14 | V2E3203 |
| 200 | 10 | 6¾ | 25 | 60 | (1)–#6 to 350 kcmil | 21 | V2F3204 |
| **Main Switch④, 12" Wide Units, Back Connected** | | | | | | | |
| 200 | 10 | 6¾ | 25 | 50 | ⑤ | 21 | V2F3204MS■ |

**For inches / millimeters conversion, multiply inches by 25.4.**

■ Built to order. Allow 4–6 weeks for delivery.
① These units are available in LR (left, right) connection figurations only.
② This unit is not a Vacu-Break unit, but rather operates on a sliding contact, double break principle. Rated 10,000 AIC max. with either Class H or K fuses. Will not accept Class R fuse clip kits.
③ Units set up for R-fuse application only.
④ For 2-pole main switch (200A), use 3-pole main switch Vacu-Break unit.
⑤ Load-side furnished with spade type bolted terminal pads.

# Disconnect Switches

## Type VB Panel Units

*Selection*

Vacu-Break® Fusible Units for SB1, SB2 Switchboards and F1, F2 Panelboards

| Ampere Rating | Unit Height (inches) | Unit Depth (inches) | Horsepower Rating 240 Volt AC Standard | Horsepower Rating 240 Volt AC Maximum | Horsepower Rating 250 Volt DC | Lug Wire Range (Cu/Al) and Cables Per Pole | Unit Weight (pounds) | Catalog Number |
|---|---|---|---|---|---|---|---|---|
| **2-Pole①, Branch Circuits, 17" Wide Units** | | | | | | | | **240V AC, 250V DC** |
| 30–30 | 2½② | 6¾ | 1½ | 3 | 5 | (1)–#14 to #8 (Cu Only) | 5 | **V7A2211__①③■** |
| 30–30 | 5 | 6¾ | 1½ | 3 | 5 | (1)–#14 to #4 | 9 | **V7B2211LR①❍** |
| 30–30 | 5 | 6¾ | 1½ | 3 | 5 | (1)–#14 to #4 | 9 | **V7B2211_①_R⑤** |
| 30–60③ | 5 | 6¾ | 1½ –3 | 3–10 | 5–10 | (1)–#14 to #2 | 9 | **V7B2212LR④■** |
| 30–60③ | 5 | 6¾ | 1½ –3 | 3–10 | 5–10 | (1)–#14 to #4 | 9 | **V7B2212LRR⑤■** |
| 60–60 | 5 | 6¾ | 3 | 10 | 10 | (1)–#14 to #2 | 9 | **V7B2222__①③** |
| 60–60 | 5 | 6¾ | 3 | 10 | 10 | (1)–#14 to #2 | 9 | **V7B2222_①_R⑤⑧** |
| 60–100③ | 7½ | 6¾ | 3–7½ | 10–15 | 10–20 | (1)–#14 to #1/0 | 18 | **V7E2223LR④■** |
| 100–100 | 7½ | 6¾ | 7½ | 15 | 20 | (1)–#14 to #1/0 | 20 | **V7E2233__①❍** |
| 200 | 7½ | 6¾ | 15 | __ | 40 | (1)–#6 to 350 kcmil | 21 | **V7E2204__①❒** |
| 400③ | 15 | 101⁄2 | — | — | 50 | (2)–#4 to 500 kcmil | 63 | **V7H2205LR④** |
| 600③ | 15 | 10½ | — | — | — | (2)–#4/0 to 500 kcmil | 63 | **V7H2206LR④■** |
| **2-Pole, Main Switch, 17" Wide Units, Back Connected** | | | | | | | | **240V AC, 250V DC** |
| 200③ | 7½ | 6¾ | 15 | — | 40 | ⑦ | 21 | **V7E2204MS④■** |
| 400③ | 15 | 10½ | — | — | 50 | ⑦ | 63 | **V7H2205MS④** |
| 600③ | 15 | 10½ | — | — | — | ⑦ | 63 | **V7H2206MS④** |
| **3-Pole, Branch Circuits, 17" Wide Units** | | | | | | | | **240V AC** |
| 30–30 | 2½② | 6¾ | 3 | 7½ | — | (1)–#14 to #8 (Cu Only) | 5 | **V7A3211** |
| 30–30 | 5 | 6¾ | 3 | 7½ | — | (1)–#14 to #4 | 9 | **V7B3211** |
| 30–30 | 5 | 6¾ | 3 | 7½ | — | (1)–#14 to #4 | 9 | **V7B3211R⑤** |
| 30–60 | 5 | 6¾ | 3–7½ | 7½–15 | — | (1)–#14 to #2 | 9 | **V7B3212** |
| 30–60 | 5 | 6¾ | 3–7½ | 7½–15 | — | (1)–#14 to #2 | 9 | **V7B3212R⑤** |
| 60–60 | 5 | 6¾ | 7½ | 15 | — | (1)–#14 to #2 | 9 | **V7B3222** |
| 60–60 | 5 | 6¾ | 7½ | 15 | — | (1)–#14 to #2 | 9 | **V7B3222R⑤** |
| 60 | 7½ | 6¾ | 7½ | 15 | — | (1)–#14 to #1/0 | 13 | **V7E3202** |
| 60–100 | 7½ | 6¾ | 7½–15 | 15–30 | — | (1)–#14 to #1/0 | 18 | **V7E3223** |
| 100–100 | 7½ | 6¾ | 15 | 30 | — | (1)–#14 to #1/0 | 20 | **V7E3233** |
| 100–100 | 7½ | 6¾ | 15 | 30 | — | (1)–#14 to #1/0 | 20 | **V7E3233R⑤** |
| 100 | 7½ | 6¾ | 15 | 30 | — | (1)–#14 to #1/0 | 14 | **V7E3203** |
| 200–200 | 10 | 6¾ | 25 | 60 | — | (1)–#6 to 300 kcmil | 40 | **V7F3644⑥** |
| 200–200 | 10 | 6¾ | 25 | 60 | — | (1)–#6 to 300 kcmil | 40 | **V7F3244R⑤** |
| 200 | 10 | 6¾ | 25 | 60 | — | (1)–#6 to 350 kcmil | 21 | **V7F3204** |
| 400 | 15 | 10½ | 50 | 125 | — | (2)–#4 to 500 kcmil | 63 | **V7H3205** |
| 400 | 15 | 10½ | 50 | 125 | — | (1) 1/0 to 750 kcmil | 63 | **V7H3205750** |
| 600 | 15 | 10½ | 75 | 200 | — | (2)–#4 to 500 kcmil | 63 | **V7H3206** |
| **3-Pole, Main Switch, 17" Wide Units (Vertical Mount, Top Feed, Front Connected)** | | | | | | | | **240V AC** |
| 400 | 18.75 | 10⅜ | 50 | 125 | — | — | — | **VMS325T** |
| 600 | 18.75 | 10⅜ | 75 | 200 | — | — | — | **VMS326T** |
| **3-Pole, Main Switch, 17" Wide Units (Vertical Mount, Bottom Feed, Front Connected)** | | | | | | | | **240V AC** |
| 400 | 18.75 | 10⅜ | 50 | 125 | — | — | — | **VMS325B** |
| 600 | 18.75 | 10⅜ | 75 | 200 | — | — | — | **VMS326B** |
| **3-Pole, Main Switch, 17" Wide Units, Back Connected** | | | | | | | | **240V AC** |
| 100 | 7½ | 6¾ | 15 | 30 | — | ⑦ | 14 | **V7E3203MS** |
| 200 | 10 | 6¾ | 25 | 60 | — | ⑦ | 21 | **V7F3204MS** |
| 400 | 15 | 10½ | 50 | 125 | — | ⑦ | 63 | **V7H3205MS** |
| 600 | 15 | 10½ | 75 | 200 | — | ⑦ | 63 | **V7H3206MS** |

**For inches / millimeters conversion, multiply inches by 25.4.**

■ Built to order. Allow 4-6 weeks for delivery.
❒ MR suffix. Built to order. Allow 4-6 weeks for delivery.
❍ MR, LM suffix. Built to order. Allow 4-6 weeks for delivery.

①Order 2-pole branch circuit units by adding appropriate connection designation LM, LR or MR (indicating Left, Middle and Right, facing the panel).
②This unit is not a Vacu-Break unit, but rather operates on a sliding contact, double break principle. Rated 10,000 AIC max. with either Class H or K fuses. Will not accept Class R fuse clip kits.
③MR not available.
④Available as Type LR connection designation only.
⑤Switches set up for R-fuse applications only.
⑥Rated 600 Volts but factory configured to accept 250V Class H, K or R fuses. Field convertible for Class J fuses for 600V applications. Field convertible for 300V Class T fuse with TFAK42 kit.
⑦Load-side furnished with spade type bolted terminal pads.
⑧V7B2222MR not available

# Disconnect Switches

## Type VB Panel Units

*Selection*

Vacu-Break® Fusible Units For SB1, SB2 Switchboards and F1, F2 Panelboards

| Ampere Rating | Unit Height (inches) | Unit Depth (inches) | Horsepower Rating 480 Volt AC Standard | 480 Volt AC Maximum | 600 Volt AC Standard | 600 Volt AC Maximum | Lug Wire Range (Cu/Al) and Cables Per Pole | Unit Weight (pounds) | Catalog Number |
|---|---|---|---|---|---|---|---|---|---|
| **2-Pole, Branch Circuits, 17" Wide Units①** | | | | | | | | | **600V AC, 250V DC** |
| 30–30 | 7½ | 6¾ | 3 | 7½ | 3 | 10 | (1)–#14 to #4 | 14 | **V7E2611LR⑧■** |
| 30–60 | 7½ | 6¾ | 3–5 | 7½–20 | 3–5 | 20–25 | (1)–#14 to #4 | 14 | **V7E2612LR⑧■** |
| 100 | 7½ | 6¾ | 10 | 20 | 15 | 40 | (1)–#14 to #1/0 | 14 | **V7E2603LR⑧■** |
| **3-Pole, Branch Circuits, 17" Wide Units** | | | | | | | | | **600V AC, 250V DC** |
| 30–30 | 7½ | 6¾ | 5 | 15 | 7½ | 20 | (1)–#14 to #4 | 14 | **V7E3611** |
| 30–30 | 7½ | 6¾ | 5 | 15 | 7½ | 20 | (1)–#14 to #4 | 14 | **V7E3611R⑦** |
| 30 | 7½ | 6¾ | 5 | 15 | 7½ | 20 | (1)–#14 to #4 | 14 | **V7E3601** |
| 30–60 | 7½ | 6¾ | 5–15 | 15–30 | 7½–15 | 20–50 | (1)–#14 to #2 | 14 | **V7E3612** |
| 60–60 | 7½ | 6¾ | 15 | 30 | 15 | 50 | (1)–#14 to #2 | 14 | **V7E3622** |
| 60–60 | 7½ | 6¾ | 15 | 30 | 15 | 50 | (1)–#14 to #2 | 14 | **V7E3622R⑦** |
| 60 | 7½ | 6¾ | 15 | 30 | 15 | 30 | (1)–#14 to #2 | 14 | **V7E3602** |
| 60–100 | 7½ | 6¾ | 15–25 | 30–60 | 15–30 | 50–75 | (1)–#14 to #1/0 | 18 | **V7E3623** |
| 100–100 | 7½ | 6¾ | 25 | 60 | 30 | 75 | (1)–#14 to #1/0 | 20 | **V7E3633** |
| 100–100 | 7½ | 6¾ | 25 | 60 | 30 | 75 | (1)–#14 to #1/0 | 20 | **V7E3633R⑦** |
| 100 | 7½ | 6¾ | 25 | 60 | 30 | 75 | (1)–#14 to #1/0 | 14 | **V7E3603** |
| 200–200 | 10 | 6¾ | 50 | 125 | 60 | 150 | (1)–#6 to 300 kcmil | 40 | **V7F3644J②** |
| 200 | 10 | 6¾ | 50 | 125 | 60 | 150 | (1)–#6 to 350 kcmil | 21 | **V7F3604** |
| 200 | 10 | 6¾ | 50 | 125 | 60 | 150 | (1)–#6 to 350 kcmil | 21 | **V7F3604R⑦** |
| 400 | 15 | 10½ | 100 | 250 | 125 | 350 | (2)–#4 to 500 kcmil | 63 | **V7H3605** |
| 400 | 15 | 10½ | 100 | 250 | 125 | 350 | (1)–1/0 to 750 kcmil | 63 | **V7H3605750** |
| 600 | 15 | 10½ | 150 | 400 | 200 | 500 | (2)–#4/0 to 500 kcmil | 63 | **V7H3606** |
| **3-Pole, Main Switch, 17" Wide Units (Vertical Mount, Top Feed, Front Connected)** | | | | | | | | | **600V AC, 250V DC** |
| 400 | 18.75 | 10⅜ | 100 | 250 | 125 | 350 | ③ | — | **VMS365T** |
| 600 | 18.75 | 10⅜ | 150 | 400 | 200 | 500 | ③ | — | **VMS366T** |
| **3-Pole, Main Switch, 17" Wide Units (Vertical Mount, Bottom Feed, Front Connected)** | | | | | | | | | **600V AC, 250V DC** |
| 400 | 18.75 | 17 11/16 | 100 | 250 | 125 | 350 | ③ | — | **VMS365B** |
| 600 | 18.75 | 17 11/16 | 150 | 400 | 200 | 500 | ③ | — | **VMS366B** |
| **3-Pole, Main Switch, 17" Wide Units, Back Connected** | | | | | | | | | **600V AC, 250V DC** |
| 100 | 7½ | 6¾ | 25 | 50 | 30 | 50 | ③ | 14 | **V7E3603MS■** |
| 200 | 10 | 6¾ | 50 | 125 | 60 | 150 | ③ | 21 | **V7F3604MS■** |
| 400 | 15 | 10½ | 100 | 250 | 125 | 350 | ③ | 63 | **V7H3605MS** |
| 600 | 15 | 10½ | 150 | 400 | 200 | 500 | ③ | 63 | **V7H3606MS** |
| **3-Pole, Switchboard Units, 21" Wide Units, Front Connected⑤** | | | | | | | | | **600V AC, 250V DC** |
| 800 | 25 | 12¾ | 200 | 500 | 250 | 500 | — | 160 | **VF357TL** or BL④❍ |
| 1200 | 25 | 12¾ | — | — | — | — | — | 160 | **VF358TL** or BL④ |
| **3-Pole, Switchboard Units, 21" Wide, Back Connected** | | | | | | | | | **600V AC, 250V DC** |
| 800 | 25 | 12¾ | 200 | 500 | 250 | 500 | — | 160 | **VB357TL** or BL④■ |
| 1200 | 25 | 12¾ | — | — | — | — | — | 160 | **VB358TL** or BL④■ |

■ Built to order. Allow 2–3 weeks for delivery.
◆ MR suffix only is available and built to order. Allow 2–3 weeks for delivery.
❍ BL suffix. Built to order. Allow 2–3 weeks for delivery.
①Catalog number for 2-pole branch circuit units indicate connection designation LM, LR or MR (indicating Left, Middle and Right, facing the panel).

②Unit configured to accept class J fuses only. Also accepts 300V Class T fuses when used with TFAK42 adapter kit.
③Load-side furnished with spade type bolted terminal pads.
④Suffix "T" or "TL" indicates Top Feed. Suffix "B" or "BL" indicates Bottom Feed.
⑤Back connected units are also available. Substitute the letter "B" (back connected) for the letter "F" (front connected) in the prefix of the catalog number. All other features are identical.

⑥Available as Type MR designation only.
⑦Switches set up for R-fuse applications only.
⑧Available as Type LR designation only.

### Extension Kits

To extend Vacu-Break unit's depth, order the extension kit which meets the specifications of the unit to be extended. Specify by catalog number from the table to the right.

| Unit Type | Unit Height (inches) | Normal Unit Depth (inches) | Extended Unit Depth (inches) | Catalog Number |
|---|---|---|---|---|
| V2A | 2½ | 4⁹⁄₁₆ | 6¾ | **W43000■** |
| V2B | 5 | 4⁹⁄₁₆ | 6¾ | **W43002** |
| V7A | 2½ | 6¾ | 10½ | **W48762** |
| V7B | 5 | 6¾ | 10½ | **W48763** |
| V7E | 7½ | 6¾ | 10½ | **W48764** |
| V7F | 10 | 6¾ | 10½ | **W48765** |

### Fuse Adapter Kits

Class R and Class J Fuse Kits are single unit part numbers. Order (2) kits for dual units. Class T Fuse Kits are single pole part numbers. Order (3) kits for a 3-pole unit. To order the kit which meets the specifications of the unit to be changed, specify by catalog number from the tables below.

**240 Volt Fuse Adapter Kits**

| Switch Amperage | Class R Kits Catalog Number | Class J Kits Catalog Number | Class T Kits Catalog Number |
|---|---|---|---|
| 30② | **Factory Inst.** | — | — |
| 60 | **W56628** | — | — |
| 100 | **W55365** | **W49827** | **TFAK32** |
| 200 | **W55366** | **W49819** | **TFAK42** |
| 400 | **W55367** | **W49814** | **TFAK52** |
| 600 | **W55368** | **W49813** | **TFAK62** |

**600 Volt Fuse Adapter Kits**

| Switch Amperage | Class R Kits Catalog Number | Class J Kits Catalog Number | Class T Kits Catalog Number |
|---|---|---|---|
| 30 | **W56623** | **W49832** | — |
| 60 | **W56629** | **W49830** | — |
| 100 | **W55365** | **W49828** | **TFAK35** |
| 200 | **W55366**③ | **W49818**① | **TFAK45** |
| 400 | **W55367** | **W49816** | **TFAK55** |
| 600 | **W55368** | **W49815** | **TFAK65** |
| 800 | — | — | **TFAK75** |

**Vacu-Break Connecting Strap Kits For Panelboards and Switchboards**

| Ampere Rating | 240V Unit Height (inches) | 600V Unit Height (inches) | S4/F1, FPP (10" Deep) Strap Kit | S5/F2 (12.75" Deep) Strap Kit | SB1, SB2, SB3, FC-20, FC-1, VB-5, VB-6, Strap Kit |
|---|---|---|---|---|---|
| 30–30 | 2.5 | — | **F602** | **F602D** | — |
| 30–30 | 5 | 7.5 | **F657** | **F657D** | **VB657** |
| 30-60 | 5 | 7.5 | **F657** | **F657D** | **VB657** |
| 60–60 | 5 | 7.5 | **F657** | **F657D** | **VB657** |
| 60-100 | 7.5 | 7.5 | **F657** | **F657D** | **VB657** |
| 100-100 | 7.5 | 7.5 | **F657** | **F657D** | **VB657** |
| 100 | 7.5 | 7.5 | **F657** | **F657D** | **VB657** |
| 200 | 7.5, 10 | 7.5, 10 | **F671** | **F671D** | **VB671** |
| 200–200 | 10 | 10 | **F672** | **F672D** | **VB610** |
| 400 | 15 | 15 | — | — | **VB6150** |
| 600 | 15 | 15 | — | **F6150D** | **VB6150** |

### Ordering Information

| Catalog Number | Description |
|---|---|
| **Fuse Clip Kits** | |
| **VBFCL3**④ | 100A for V2E & V7E units (6) fuse clips per kit |
| **VBFCL4**⑤ | 200A for V2E, V2F, V7E & V7F units (6) fuse clips per kit |
| **VBFCL5**④ | 400A for V7H & VMS units (3) fuse clips per kit |
| **VBFCL6**④ | 600A for V7H & VMS units (3) fuse clips per kit |
| **Lug Kits** | |
| **VBRL4** | 200A for V2F, V7E & V7F units (3) lugs per kit |
| **VBRL5** | 400A for V7H units (6) lugs per kit |
| **VBRL6** | 600A for V7H units (6) lugs per kit |
| **Handle Kits** | |
| **VBRHK1232** | 100A for twin V2E & V7E units (2) handles per kit |
| **VBRHK41** | 200A for single V2E, V2F, V7E & V7F units (1) handle per kit |
| **VBRHK42** | 200A for twin V7F units (2) handles per kit |

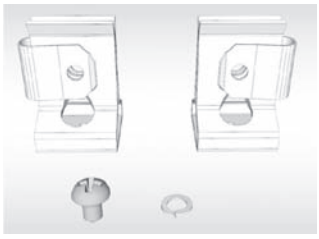

**VBFCL4**

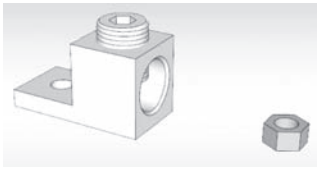

**VBRL4**



**VBRHK41**

**For inches / millimeters conversion, multiply inches by 25.4.**

■ Built to order. Allow 2–3 weeks for delivery.

①For 200 A single units only. Dual units are suitable for Class J only, when used above 240V.

②5″ unit height switches only.

③For single units only.

④Fuse clips provided can be used on both the line and load sides.

⑤Three line and three load fuse clips are provided.

# Disconnect Switches

## Type HCP Switchboard Units, Accessories

*Selection*

### Features

- UL Listed under file number E6849 Vol 1, Sect. 8
- 400-1200A ratings
- Visible contacts
- Field installable shunt trip and auxiliary switch accessory kits
- Installs in existing Siemens switchboards and power panelboards
- Suitable for use on systems with up to 200,000A available fault current, RMS symmetrical when equipped with Class J or Class L fuses
- Group mounts with other 30A through 600A switches, and 100 through 1200 amp frame breakers
- Allows 800A and 1200A switches in standard 38" wide distribution sections in either main or branch configurations
- 16¼" mounting height is the smallest 1200A design in the industry, allowing up to 4 units in one vertical section
- Field reversible horizontal mounting design for left or right hand cabling
- Handle can be padlocked in the OFF position with up to three padlocks with 5/16" hasps. A cover padlocking provision is also supplied




### 3-Pole, Horizontal Mount①

| Catalog Number | Maximum Ampere Rating | Maximum AC Voltage Rating② | Fuse Class | Dimensions (inches*) | | | Horsepower Rating | | | | | | |
|---|---|---|---|---|---|---|---|---|---|---|---|---|---|
| | | | | | | | 240V | | 480V | | 600V | | 250V DC |
| | | | | H | W | D | Std | Max | Std | Max | Std | Max | |
| **HCP367HJ400** | 400 | 600 | J | 16.25 | 17.22 | 7.38 | 50 | 125 | 100 | 250 | 125 | 350 | 40 |
| **HCP367HJ600** | 600 | 600 | J | 16.25 | 17.22 | 7.38 | 75 | 200 | 150 | 400 | 200 | 400 | 40 |
| **HCP327HT** | 800 | 240 | T | 16.25 | 17.22 | 7.38 | 100 | 250 | — | — | — | — | 50 |
| **HCP367H** | 800 | 600 | L | 16.25 | 17.22 | 7.38 | 100 | 250 | 200 | 500 | 250 | 500 | 50 |
| **HCP328HT** | 1200 | 240 | T | 16.25 | 17.22 | 7.38 | 100 | 250 | — | — | — | — | 50 |
| **HCP368H** | 1200 | 600 | L | 16.25 | 17.22 | 7.38 | 100 | 250 | 200 | 500 | 250 | 500 | 50 |

### 3-Pole, Vertical Mount

| | | | | | | | | | | | | | |
|---|---|---|---|---|---|---|---|---|---|---|---|---|---|
| **HCP367VJ400** | 400 | 600 | J | 17.00 | 16.25 | 7.38 | 50 | 125 | 100 | 250 | 125 | 350 | 40 |
| **HCP367VJ600▲** | 600 | 600 | J | 17.00 | 16.25 | 7.38 | 75 | 200 | 150 | 400 | 200 | 400 | 40 |
| **HCP327VT** | 800 | 240 | T | 17.00 | 16.25 | 7.38 | 100 | 250 | — | — | — | — | 50 |
| **HCP367V** | 800 | 600 | L | 17.00 | 16.25 | 7.38 | 100 | 250 | 200 | 500 | 250 | 500 | 50 |
| **HCP328VT** | 1200 | 240 | T | 17.00 | 16.25 | 7.38 | 100 | 250 | — | — | — | — | 50 |
| **HCP368V** | 1200 | 600 | L | 17.00 | 16.25 | 7.38 | 100 | 250 | 200 | 500 | 250 | 500 | 50 |



## Accessories

### Terminal Connectors (one lug per kit)

| Ampere Rating | Catalog Number | Connector Wire Range |
|---|---|---|
| 400–600A | **TA2K500** | (2) #1 AWG–500 kcmil (Cu or Al) |
| 400–600A | **TC2K500** | (2) #1 AWG–500 kcmil (Cu only) |
| 400–800A | **TA3K500** | (3) #1 AWG–500 kcmil (Cu or Al) |
| 400–800A | **TC3K350** | (3) #1 AWG–350 kcmil (Cu only) |
| 800-1200A | **TA4H500** | (4) #2 AWG–500 kcmil (Cu or Al) |
| 800-1200A | **TA3H750** | (3) 500–750 kcmil (Cu or Al) |

### Auxiliary Switch Kits

| Contact Ampere Rating | Maximum Voltage | | Switch Mounting | Contacts | Catalog Number |
|---|---|---|---|---|---|
| | AC | DC | | | |
| 15A | 480 | 125 | Left Pole | 1NO/1NC | **A01HCPL4▲** |
| 15A | 480 | 125 | Right Pole | 1NO/1NC | **A01HCPR4** |

### Shunt Trip Kit

| Control Voltage | | |
|---|---|---|
| AC | DC | Catalog Number |
| 120 | — | **HCPST120** |
| 240 | — | **HCPST240▲** |
| 277 | — | **HCPST277** |
| 480 | — | **HCPST480▲** |

### Switchboard Connection Strap Kit①

| Switch Ampere Rating | Catalog Number |
|---|---|
| 400–1200A | **F6162D** |

### T Fuse Adapter Kits (one per pole)

| Catalog Number | Description |
|---|---|
| **TFAK72** | 800A, 300V AC |
| **TFAK75** | 800A, 600V AC |
| **TFAK82** | 1200A, 300V AC |

### HCP Replacement Handle Kit (For use on all HCP switches)

| SW Ampere Rating | Catalog Number |
|---|---|
| 400–1200A | **HCPHK** |

### Compression Lug Adapter Kit

The use of this kit provides for the mounting of up to four lugs per phase. Each kit accepts lugs with (2) 3/8" diameter mounting holes on 1" centers. One kit per pole line or load is required. Lugs are not provided.

***For inches / millimeters conversion, multiply inches by 25.4.**

▲ Built to order. Allow 6–8 weeks for delivery.
① For horizontal mounting only in either 38" wide min switchboards or S5/F2 power panelboards.

② Both 240 and 600V AC switches are also rated 250V DC max.

### Horizontal Mount Drawing

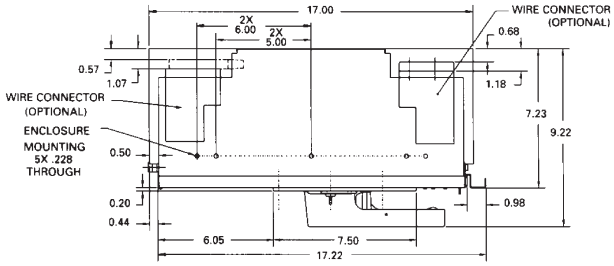


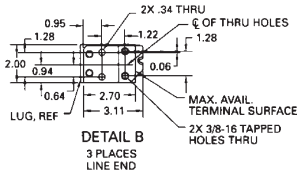


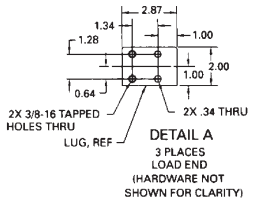


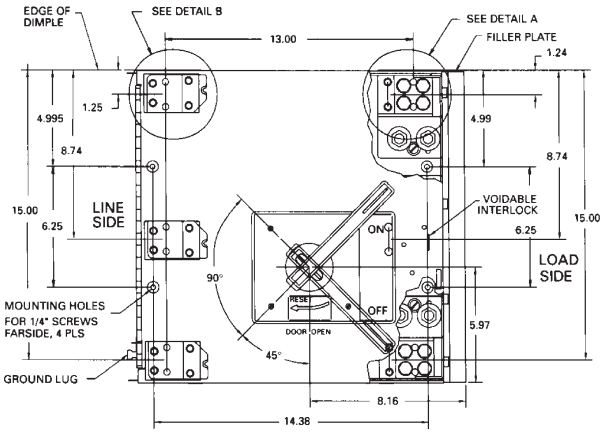


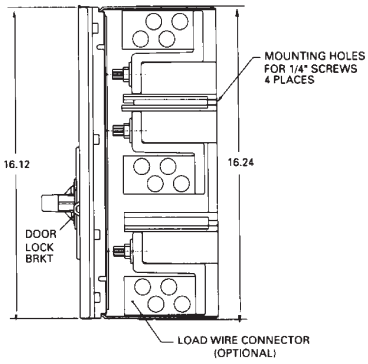


### Group Mounting Assembly (Horizontal Mount Only)

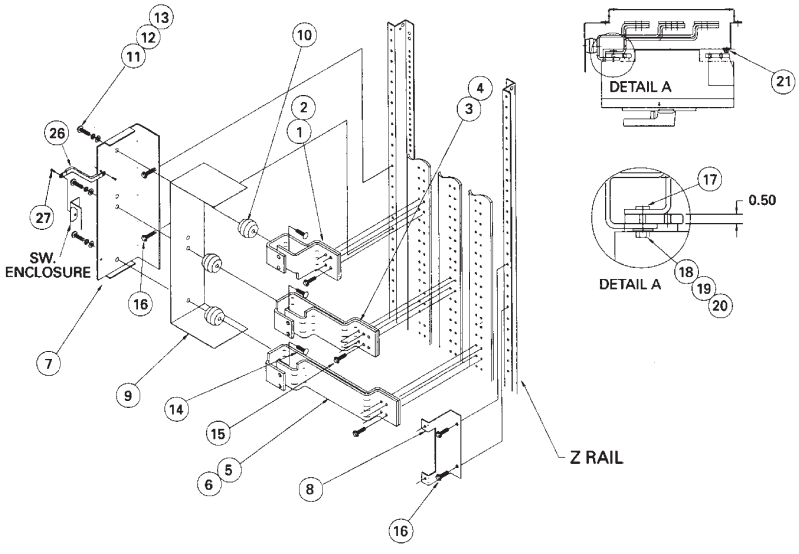





Note: Right exit shown, rotate 180° for left exit
Note: Items 26 & 27 are used to ground the switch enclosure (Route bonding wire along flange)

| Item | Parts Supplied in Connection Strap Kit Cat. No. F6162D | Qty. |
|---|---|---|
| 1-2 | A/CØ Strap (Short) | 1ea. |
| 3-4 | BØ Strap | 1ea. |
| 5-6 | A/C Ø Strap (Long) | 1ea. |
| 7-8 | Switch Mounting Bracket | 1ea. |
| 9 | Insulation | 1 |
| 10 | 1-3/8" Insulator | 3 |
| 11 | 3/8-16 X 3/4" HHMS | 3 |
| 12 | 3/8" Lock Washer | 3 |
| 13 | 3/8" Flat Washer | 3 |
| 14 | 3/8-16 X 3/4" RHSNB | 3 |
| 15 | Strap Bus Hardware Kit | 2 |
| 16 | 1/4-28 X 3/8" SHWHSW | 4 |
| 17 | 5/16-18 Insert | 6 |
| 18 | 5/16-18 X 1" SRHMS | 6 |
| 19 | 5/16 Flat Washer | 6 |
| 20 | 5/16 Lock Washer | 6 |
| 21 | 1/4-20 X 1" SRHMS | 2 |
| 26 | Ground Bracket | 1 |
| 27 | 10-32 X 1/4" SHWHSW | 2 |

### Features

**Type TFP Fusible Pullouts**

- 100 and 200 Ampere Disconnects
- 240 Volt and 600 Volt Designs
- Class T Fuses
- Factory Installed Wire Connectors
- U.L. Listed for applications up to 200,000 Amps symmetrical at 600 Volts
- Physically interchangeable with Siemens Type QJ2, QJH2 and QJ2-H
- UL 1429, File No. E118778

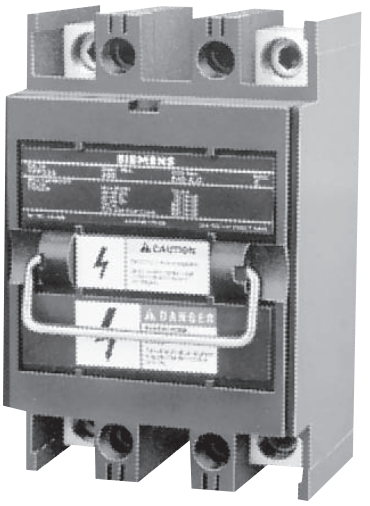


**T-Fuse Pullout**
**TFP223**



### T-Fuse Pullouts

**2-Pole, 2-Fuse**

| Maximum Voltage | Ampere Rating | Catalog Number | Connector Wire Range 60/75°C① |
|---|---|---|---|
| 240② | 100<br>200 | **TFP223**<br>**TFP224** | (1 pc.) #6-300 kcmil Cu<br>(1 pc.) #4-300 kcmil Al |

**3-Pole, 3-Fuse**

| | | | |
|---|---|---|---|
| 240② | 100<br>200 | **TFP323**<br>**TFP324** | (1 pc.) #6-300 kcmil Cu<br>(1 pc.) #4-300 kcmil Al |
| 600 | 100<br>200 | **TFP363**<br>**TFP364** | |

**Fuses** — Not included. Consult local sales office for replacement parts.

### Fusible Pullouts Dimensions (inches*)

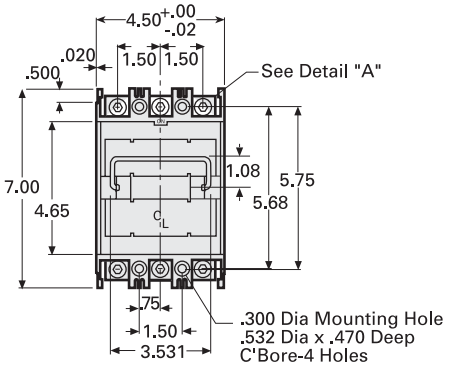


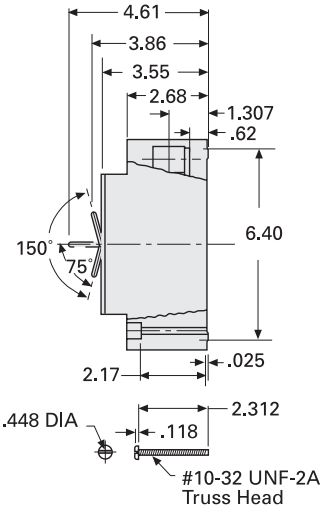


**Class T Pullout Mounting Hardware**
**Catalog Number MSQJ (Includes 4 screws)**

**For inches / millimeters conversion, multiply inches by 25.4.**

① Replacement terminal lug Catalog Number **TA1Q300**.
② 240 bolt pullouts require 300 volt Class T fuses.