SIEMENS

Data sheet LZS:PT2D5L24

Plug-in relay complete unit 2 W, 24 V DC LED module red Socket with logic isolation Spring-type terminal (push-in)



product brand name	SIRIUS
product designation	Coupling relay with plug-in relay
product type designation	LZS

General technical data	
display version LED	Yes
consumed active power	0.75 W
percental drop-out voltage related to the input voltage	10 %
protection class IP	IP20
operating frequency without load	360 1/h
operating frequency with load	36 000 1/h
switching behavior	monostable
design of the switching function	changeover switch
design of the switching function positively driven	No
mechanical service life (switching cycles)	
• typical	30 000 000
electrical endurance (switching cycles)	
• at AC-15 at 230 V typical	180 000
thermal current	12 A
reference code acc. to IEC 81346-2	K

Subject to change without notice
© Copyright Siemens

Control circuit/ Control	
control supply voltage at DC	
• rated value	24 V
operating range factor control supply voltage rated value at DC	
• initial value	0.9
• full-scale value	1.4
closing delay	
• at DC	15 ms
opening delay	
• at DC	18 ms
design of the relay operating mechanism	poled
product component plug-in socket	Yes
design of the snap-on socket base	Socket with logic isolation

Short-circuit protection	
design of the fuse link	
• for short-circuit protection of the auxiliary switch required	fuse gG: 6 A

Auxiliary circuit	
type of switching contact	Changeover contact
material of switching contacts	AgNi 90/10
number of NC contacts for auxiliary contacts	0
number of NO contacts for auxiliary contacts	0
number of CO contacts	
• for auxiliary contacts	2
operational current of auxiliary contacts at AC-15	
• at 250 V	4 A
operational current at DC-13	
• at 24 V rated value	4 A
operational current of auxiliary contacts at DC-13	
• at 24 V	4 A

Main circuit	
type of voltage	DC

Outputs	
ampacity of the output relay at DC-13	
• at 24 V	4 A

Display	
display version	
• as status display by LED	LED red

Connections/ Terminals

Subject to change without notice
© Copyright Siemens

product function	
• removable terminal	No
type of electrical connection	spring-loaded terminals
type of connectable conductor cross-sections	
• solid	1x (0,75 ... 1,5), 2x (0,75 ... 1,0), 2x 1,5
• finely stranded with core end processing	1x (0,75 ... 1,5), 2x 0,75
• finely stranded without core end processing	1x (0,75 ... 1,5), 2x (0,75 ... 1,0), 2x 1,5
• at AWG cables solid	1x (18 ... 16), 2x (18 ... 16)
• at AWG cables stranded	1x (18 ... 16), 2x (18 ... 16)
connectable conductor cross-section	
• solid	0.75 ... 1.5 mm²
• finely stranded with core end processing	0.75 ... 1.5 mm²
• finely stranded without core end processing	0.75 ... 1.5 mm²
AWG number as coded connectable conductor cross section	
• solid	18 ... 16
• stranded	18 ... 16

Installation/ mounting/ dimensions

mounting position	any
fastening method	snap-on mounting
height	98 mm
width	28 mm
depth	79 mm

Ambient conditions

ambient temperature	
• during operation	-40 ... +70 °C
• during storage	-25 ... +70 °C
• during transport	-25 ... +70 °C

Certificates/ approvals

General Product Approval		Declaration of Conformity	other	
			Miscellaneous	Confirmation
VDE		EG-Konf.		

Further information

Information- and Downloadcenter (Catalogs, Brochures,…)
https://www.siemens.com/ic10

Industry Mall (Online ordering system)
https://mall.industry.siemens.com/mall/en/en/Catalog/product?mlfb=LZS:PT2D5L24

Cax online generator
http://support.automation.siemens.com/WW/CAXorder/default.aspx?lang=en&mlfb=LZS:PT2D5L24

Subject to change without notice
© Copyright Siemens

Service&Support (Manuals, Certificates, Characteristics, FAQs,...)
https://support.industry.siemens.com/cs/ww/en/ps/LZS:PT2D5L24

Image database (product images, 2D dimension drawings, 3D models, device circuit diagrams, EPLAN macros, ...)
http://www.automation.siemens.com/bilddb/cax_de.aspx?mlfb=LZS:PT2D5L24&lang=en

Characteristic: Derating
https://support.industry.siemens.com/cs/ww/en/ps/LZS:PT2D5L24/manual

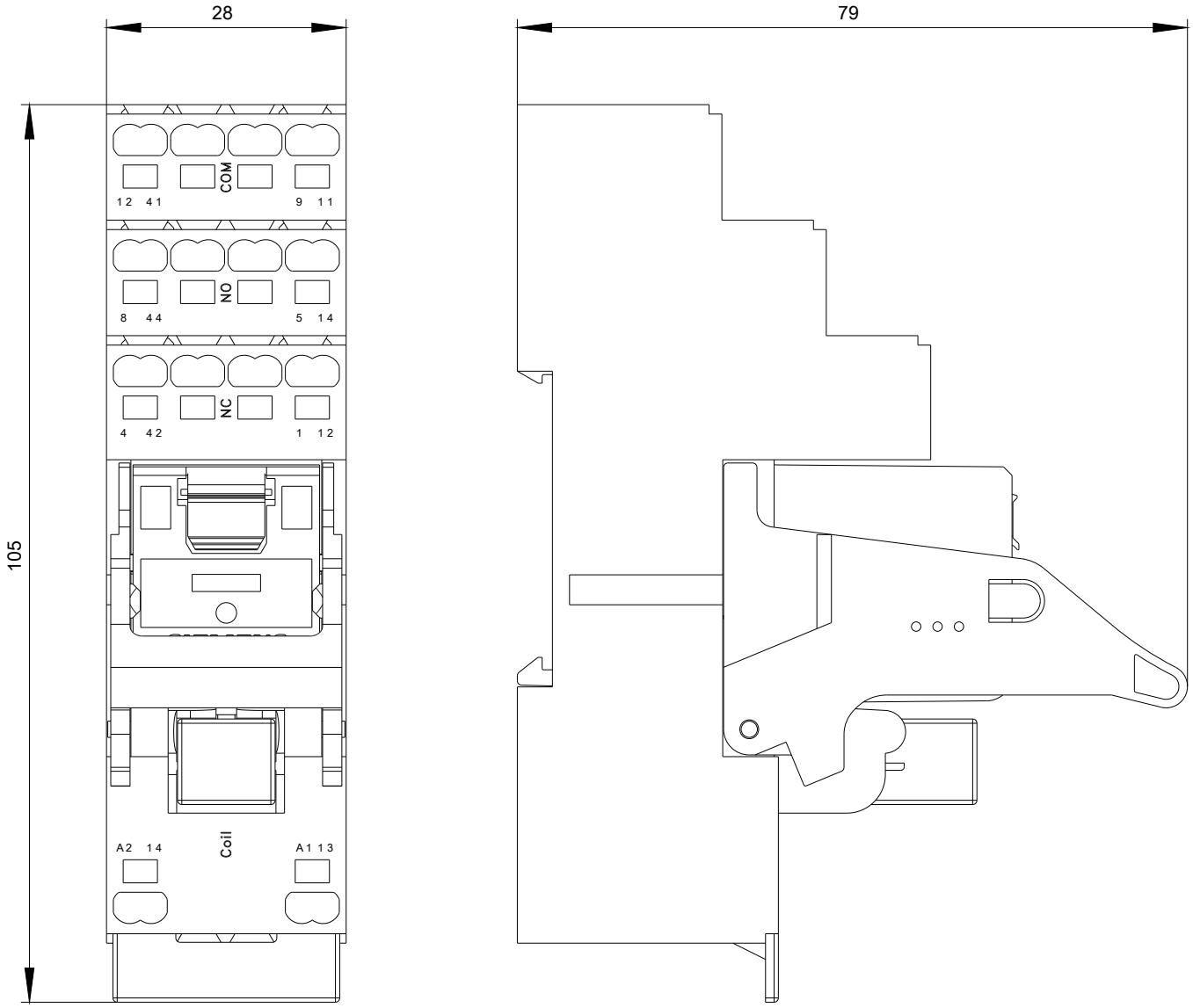

Subject to change without notice
© Copyright Siemens

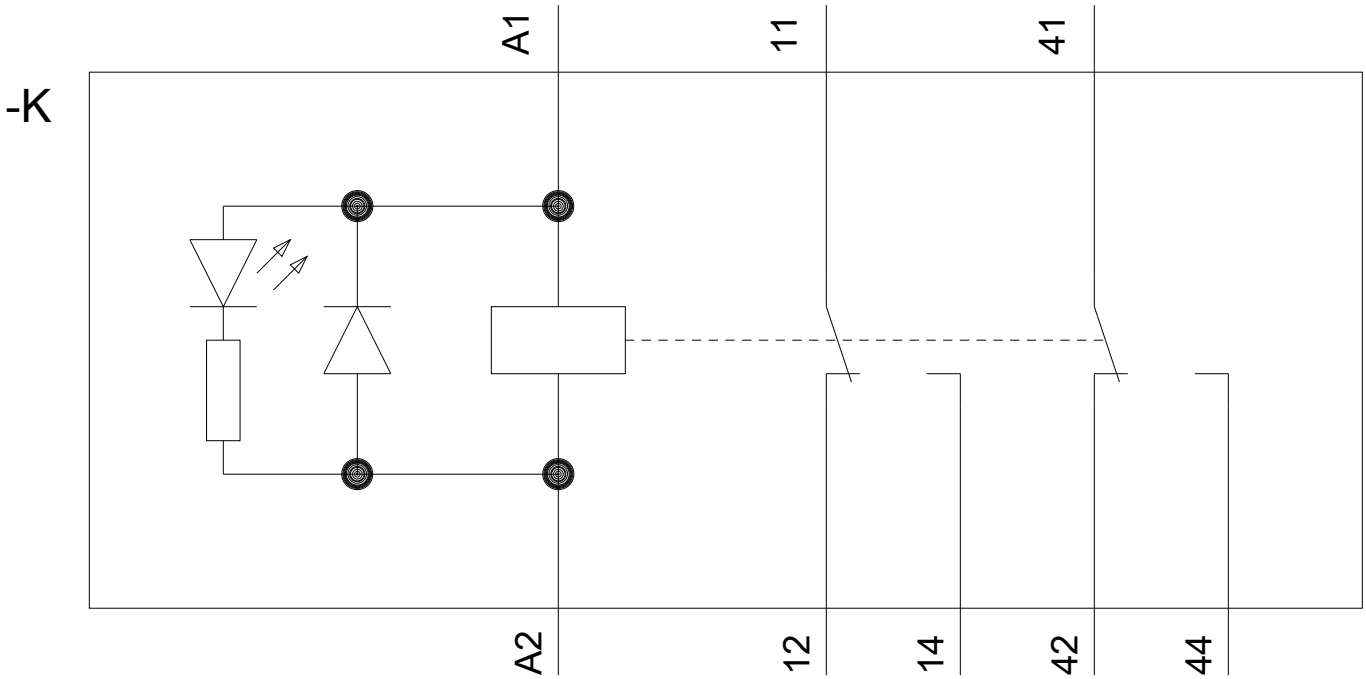

last modified: 12/07/2020

Subject to change without notice
© Copyright Siemens