SIEMENS

Data sheet 8US1051-5DM07

BUSBAR ADAPTER SYSTEM BUSBAR ADAPTER, WIDTH 45MM 40MM SYSTEM, 5+10MM RAIL STR. WITH 1 MOUNTING RAIL 35MM, UP TO 25A FOR MOTOR FEEDERS 3RV/3RT1, 3RA LENGTH 182MM



Figure similar

Model	
product brandname	SENTRON
Design of the product	Accessories
Net weight	157 g

General Product Approval			Declaration of Conformity	Test Certificates	
CSA	UR	EAC	EG-Konf.	spezielle Prüfbescheinigungen	sonstig

Shipping Approval		other
PRS	RINA	sonstig

Subject to change without notice
© Copyright Siemens

Further information

Information- and Downloadcenter (Catalogs, Brochures,…)
http://www.siemens.com/lowvoltage/catalogs

Industry Mall (Online ordering system)
https://mall.industry.siemens.com/mall/en/en/Catalog/product?mlfb=8US1051-5DM07

Service&Support (Manuals, Certificates, Characteristics, FAQs,...)
http://support.automation.siemens.com/WW/view/en/8US1051-5DM07/all

Image database (product images, 2D dimension drawings, 3D models, device circuit diagrams, ...)
http://www.automation.siemens.com/bilddb/cax_en.aspx?mlfb=8US1051-5DM07

CAx-Online-Generator
http://www.siemens.com/cax

Tender specifications
http://www.siemens.com/specifications

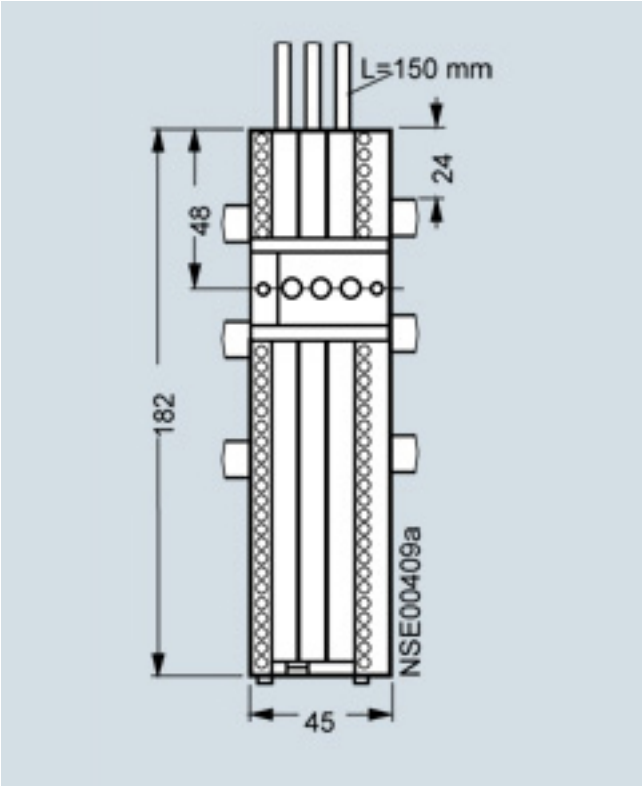

Subject to change without notice
© Copyright Siemens